xylem

PE Series

Submersible effluent pumps

The PE Series submersible effluent pump has a complete cast iron body and a thermoplastic vortex impeller. It is available in both automatic and manual configurations with a 20' cord. This "Complete. Reliable. Blue." pump is ideal for numerous styles of residential septic systems and heavy duty sump applications.

Applications

- Mound systems
- Effluent/dosing systems
- Low pressure pipe systems
- Basement draining
- Heavy duty sump/dewatering

Features

- Corrosion resistant construction and a cast iron body for durability
- Thermoplastic impeller and cover
- Upper sleeve and lower heavy-duty ball bearing construction
- Motor is permanently lubricated for extended service life and powered for continuous operation
- All ratings are within the working limits of the motor
- Mechanical seal made of carbon, ceramic, BUNA and stainless steel
- Quick disconnect power cord, 20' standard length, heavy-duty 16/3 SJTW with NEMA 5-15P, three prong, 115V or 230V grounding plug
- Stainless steel fasteners
- Three (3) year standard warranty/Four (4) year GPDA

GOULDS WATER TECHNOLOGY xylem

Product specifications

Order no.	HP	Volts	Amps	Minimum circuit breaker	Phase	Float switch style	Cord length	Discharge connection	Minimum basin diameter	Maximum solids size	Shipping Weight lbs (kgs)
PE41M	0.4	115	7.5	15	1	Manual / no switch	20’	1.5”	18”	.5”	31 (14.1)
PE41P1						Piggyback float switch					
PE42P1		230	3.7	10		Piggyback float switch					
PE51M	0.5	115	9.5	20		Manual / no switch					
PE51P1						Piggyback float switch					
PE52M		230	4.7	10		Manual / no switch					

Dimensions

(All dimensions are in inches. Do not use for construction purposes.)

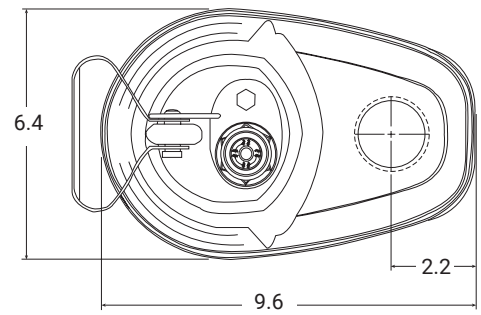

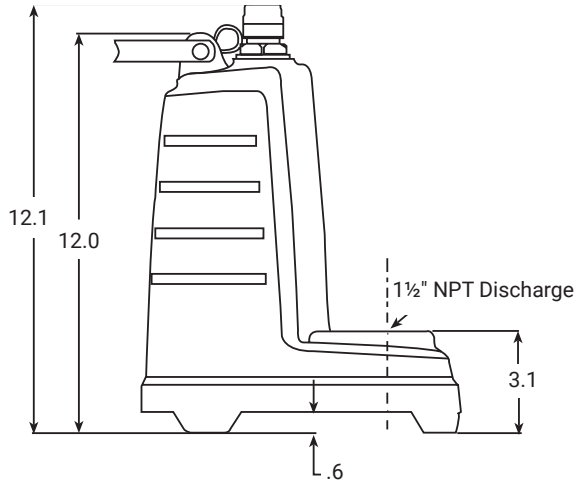

Performance curves

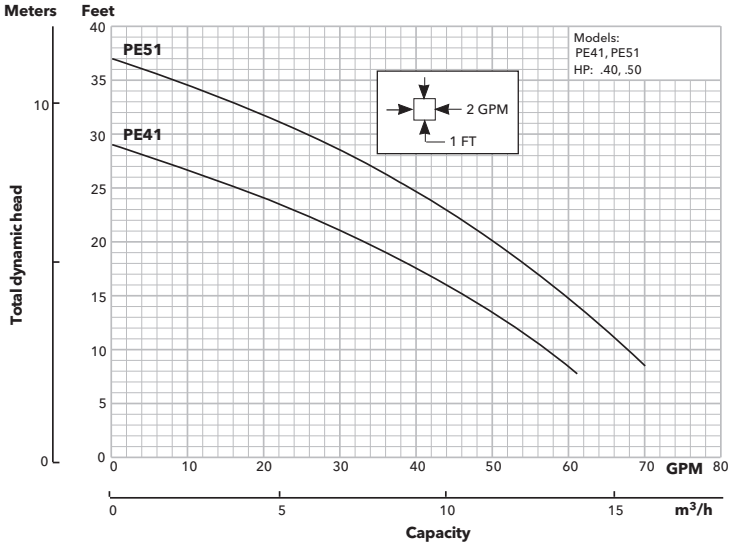

Materials of construction

Part name	Material
Impeller	Thermoplastic semi-open
Casing	Thermoplastic
Motor housing	Cast iron
Mechanical seal	Carbon, ceramic, buna and stainless steel
Cord	SJTW
Mechanical switch	Curus listed, 13A
Fasteners	Stainless steel
Handle	Stainless steel

Learn more about PE Series Pumps

COMPLETE. RELIABLE. BLUE.
Learn more about our complete line of wastewater products.

BUILT IN THE USA
ENGINEERED, ASSEMBLED & TESTED

This information is subject to change without notice. All information presented herein is believed reliable and in accordance with accepted engineering practices. Xylem makes no warranties as to the completeness of this information. Users are responsible for evaluating individual product suitability for specific applications. Xylem assumes no liability whatsoever for any special, indirect or consequential damages arising from the sale, resale or misuse of its products.

© 2026 Xylem Inc. or its affiliate. Xylem is a registered trademark of Xylem Inc. or one of its subsidiaries. Goulds Water Technology is a registered trademark of ITT Manufacturing Enterprises LLC and is used under license. All other trademarks or registered trademarks are the property of their respective owners.

GWTPE-SS-120077 R4 2/2026

xylem
Let’s Solve Water