Bell & Gossett
xylem

Instruction Manual
P2002880 Rev 8

EN

Series e-80SC

xylem

Table of Contents

1 Introduction and safety....4
1.1 Introduction.... 4
1.2 Safety.... 4
1.2.1 Safety terminology and symbols.... 4
1.2.2 Safety instruction decals.... 5
1.2.3 User safety.... 6
1.2.4 Protecting the environment.... 7

2 Transportation and storage.... 8
2.1 Examine the delivery.... 8
2.1.1 Examine the package.... 8
2.1.2 Examine the unit.... 8
2.2 Pump lifting.... 8
2.3 Long-term storage.... 9

3 Product description.... 10
3.1 General description.... 10
3.2 Operational specifications.... 11

4 Installation.... 12
4.1 Preinstallation.... 12
4.1.1 Pump mounting guidelines.... 12
4.1.2 Pump location guidelines.... 12
4.1.3 Piping checklist.... 13
4.2 Typical pump installation.... 14
4.3 Typical system installation.... 16

5 Commissioning, startup, operation, and shutdown....17
5.1 Preparation for startup.... 17
5.1.1 Check the rotation.... 17
5.2 Prime the pump.... 18
5.3 Start the pump.... 18
5.4 Pump operation precautions.... 19
5.5 Shut down the pump.... 19
5.6 Vibration.... 19

6 Maintenance.... 20
6.1 Lubrication.... 20
6.2 Disassembly.... 20
6.2.1 Disassembly precautions.... 20
6.2.2 Drain the pump.... 20
6.2.3 Impeller trimming guidelines.... 20
6.3 Reassembly.... 21
6.3.1 Replace the seal.... 21
6.3.2 Motor collar ring setting.... 23
6.3.3 Assemble the coupler.... 24
6.3.4 Screw torque values.... 27

6.3.5 Dealer servicing 27

7 Product warranty..... 28

1 Introduction and safety

1.1 Introduction

EN

Purpose of this manual

The purpose of this manual is to provide necessary information for:

- Installation
- Operation
- Maintenance

CAUTION:

Read this manual carefully before installing and using the product. Improper use of the product can cause personal injury and damage to property, and may void the warranty.

NOTICE:

Save this manual for future reference, and keep it readily available at the location of the unit.

Requesting other information

Special versions can be supplied with supplementary instruction leaflets. See the sales contract for any modifications or special version characteristics. For instructions, situations, or events that are not considered in this manual or in the sales documents, please contact the nearest Xylem representative.

Always specify the exact product type and identification code when requesting technical information or spare parts.

1.2 Safety

WARNING:

- The operator must be aware of safety precautions to prevent physical injury.
- Operating, installing, or maintaining the unit in any way that is not covered in this manual could cause death, serious personal injury, or damage to the equipment. This includes any modification to the equipment or use of parts not provided by Xylem. If there is a question regarding the intended use of the equipment, please contact a Xylem representative before proceeding.
- Do not change the service application without the approval of an authorized Xylem representative.

CAUTION:

You must observe the instructions contained in this manual. Failure to do so could result in physical injury, damage, or death.

1.2.1 Safety terminology and symbols

About safety messages

It is extremely important that you read, understand, and follow the safety messages and regulations carefully before handling the product. They are published to help prevent these hazards:

- Personal accidents and health problems
- Damage to the product and its surroundings
- Product malfunction

EN

Hazard levels

Hazard level		Indication
	DANGER:	A hazardous situation which, if not avoided, will result in death or serious injury
	WARNING:	A hazardous situation which, if not avoided, could result in death or serious injury
	CAUTION:	A hazardous situation which, if not avoided, could result in minor or moderate injury
NOTICE:		Notices are used when there is a risk of equipment damage or decreased performance, but not personal injury.

Special symbols

Some hazard categories have specific symbols, as shown in the following table.

Electrical hazard		Magnetic fields hazard	
	Electrical Hazard:		**CAUTION:**

1.2.2 Safety instruction decals

Alert symbol

	This safety alert symbol is used in manuals and on the safety instruction decals on the pump to draw attention to safety-related instructions. When used, the safety alert symbol means that failure to follow the instructions may result in a safety hazard.

Decals

Make sure your pump has these safety instruction decals and that they are located as this figure shows. If the decals are missing or illegible, contact your local sales and service representative for a replacement.

EN

All series e-80SC Pumps **All series e-80SC with optional ITSC/IT**

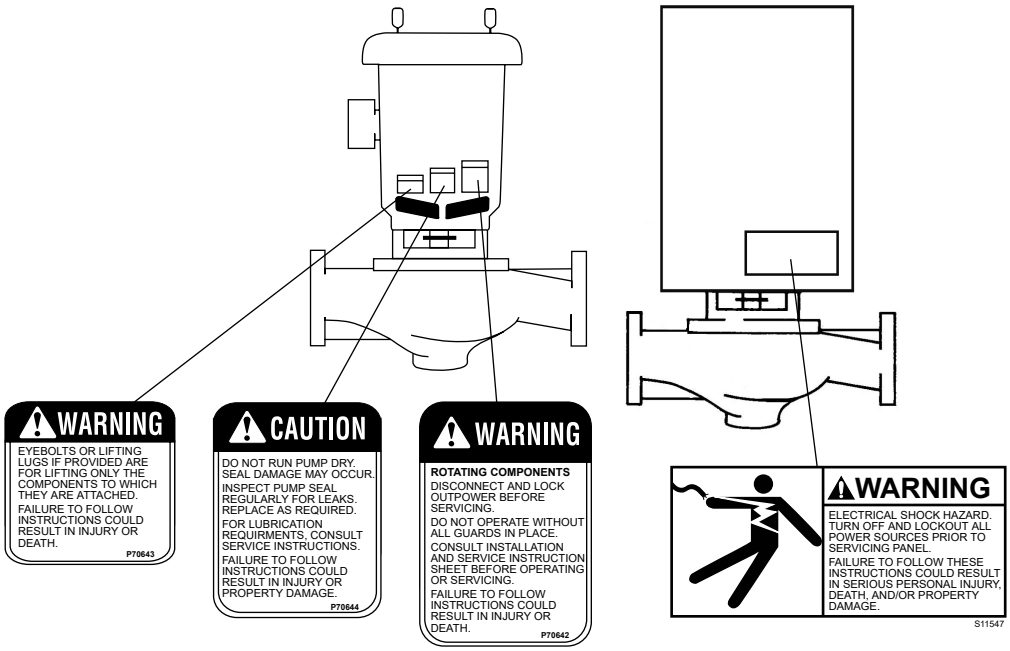

Make sure that all safety instruction decals are always clearly visible and readable.

1.2.3 User safety

General safety rules

These safety rules apply:

- Always keep the work area clean.
- Pay attention to the risks presented by gas and vapors in the work area.
- Avoid all electrical dangers. Pay attention to the risks of electric shock or arc flash hazards.
- Always bear in mind the risk of drowning, electrical accidents, and burn injuries.

Safety equipment

Use safety equipment according to the company regulations. Use this safety equipment within the work area:

- Hard hat
- Safety goggles, preferably with side shields
- Protective shoes
- Protective gloves
- Gas mask
- Hearing protection
- First-aid kit
- Safety devices

NOTICE:

Never operate a unit unless safety devices are installed. Also see specific information about safety devices in other chapters of this manual.

Electrical connections

Electrical connections must be made by certified electricians in compliance with all international, national, state, and local regulations. For more information about requirements, see sections dealing specifically with electrical connections.

EN

Precautions before work

Observe these safety precautions before you work with the product or are in connection with the product:

- Provide a suitable barrier around the work area, for example, a guard rail.
- Make sure that all safety guards are in place and secure.
- Make sure that you have a clear path of retreat.
- Make sure that the product cannot roll or fall over and injure people or damage property.
- Make sure that the lifting equipment is in good condition.
- Use a lifting harness, a safety line, and a breathing device as required.
- Allow all system and pump components to cool before you handle them.
- Make sure that the product has been thoroughly cleaned.
- Disconnect and lock out power before you service the pump.
- Check the explosion risk before you weld or use electric hand tools.

1.2.3.1 Wash the skin and eyes

Follow these procedures for chemicals or hazardous fluids that have come into contact with your eyes or your skin:

Condition	Action
Chemicals or hazardous fluids in eyes	1. Hold your eyelids apart forcibly with your fingers. 2. Rinse the eyes with eyewash or running water for at least 15 minutes. 3. Seek medical attention.
Chemicals or hazardous fluids on skin	1. Remove contaminated clothing. 2. Wash the skin with soap and water for at least 1 minute. 3. Seek medical attention, if necessary.

1.2.4 Protecting the environment

Emissions and waste disposal

Observe the local regulations and codes regarding:

- Reporting of emissions to the appropriate authorities
- Sorting, recycling and disposal of solid or liquid waste
- Clean-up of spills

Exceptional sites

CAUTION: Radiation Hazard

Do NOT send the product to Xylem if it has been exposed to nuclear radiation, unless Xylem has been informed and appropriate actions have been agreed upon.

Recycling guidelines

Always follow local laws and regulations regarding recycling.

2 Transportation and storage

2.1 Examine the delivery

EN

2.1.1 Examine the package

1. Examine the package for damaged or missing items upon delivery.
2. Record any damaged or missing items on the receipt and freight bill.
3. If anything is out of order, then file a claim with the shipping company.

   If the product has been picked up at a distributor, make a claim directly to the distributor.

2.1.2 Examine the unit

1. Remove packing materials from the product.

   Dispose of all packing materials in accordance with local regulations.
2. To determine whether any parts have been damaged or are missing, examine the product.
3. If applicable, unfasten the product by removing any screws, bolts, or straps.

   Use care around nails and straps.
4. If there is any issue, then contact a sales representative.

2.2 Pump lifting

WARNING:

- Assembled units and their components are heavy. Failure to properly lift and support this equipment could result in serious physical injury and/or equipment damage. Lift equipment only at the specifically identified lifting points. Lifting devices such as eyebolts, slings, and spreaders must be rated, selected, and used for the entire load being lifted.
- Crush hazard. The unit and the components can be heavy. Use proper lifting methods and wear steel-toed shoes at all times.

In order to lift the entire pump, use slings placed around the unit as shown.

EN

Figure 1: Proper lifting method

Series e-80SC

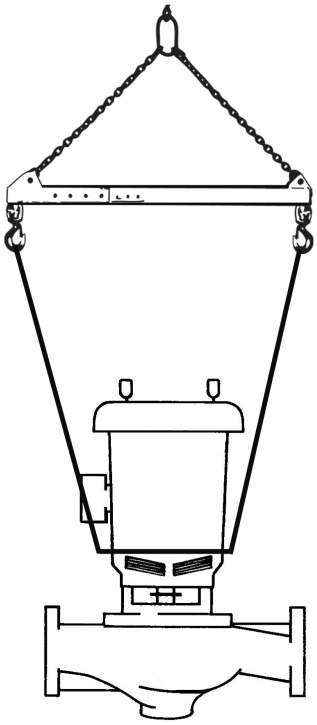

Series e-80SC with optional ITSC/IT

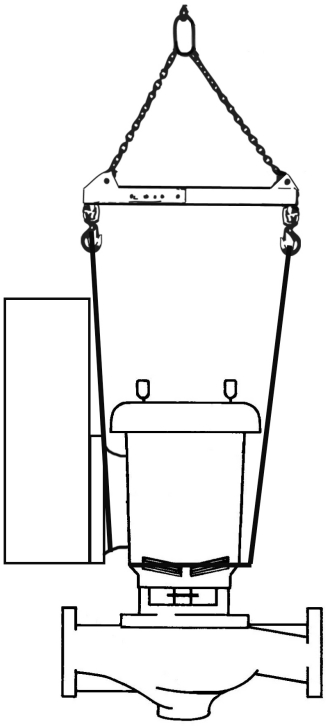

2.3 Long-term storage

If the unit is stored for more than 6 months, these requirements apply:

- Store in a covered and dry location.
- Store the unit free from heat, dirt, and vibrations.
- Rotate the shaft by hand several times at least every three months.

Treat bearing and machined surfaces so that they are well preserved. Refer to the drive unit and coupling manufacturers for their long-term storage procedures.

For questions about possible long-term storage treatment services, please contact your local sales and service representative.

3 Product description

3.1 General description

EN

The pump is a split coupled pump. These features make the pump easy to install, operate, and service:

- High efficiency
- Rugged stainless steel-fitted construction (except 10x10x13.5, 12x12x13, 14x14x14 bronze fitted)
- Vertical in-line mounting

Mechanical seal options

The pump has two options for the mechanical seal.

Figure 2: Inside mechanical seal

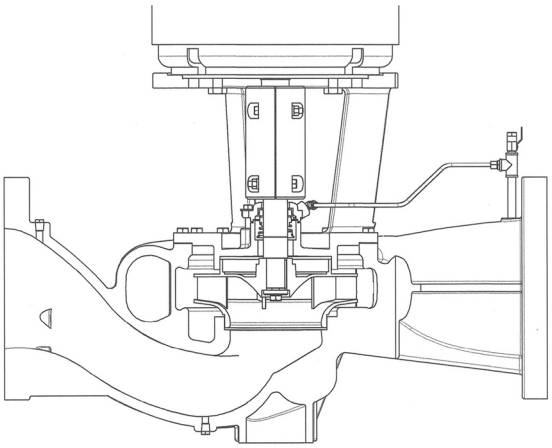

Figure 3: Outside mechanical seal

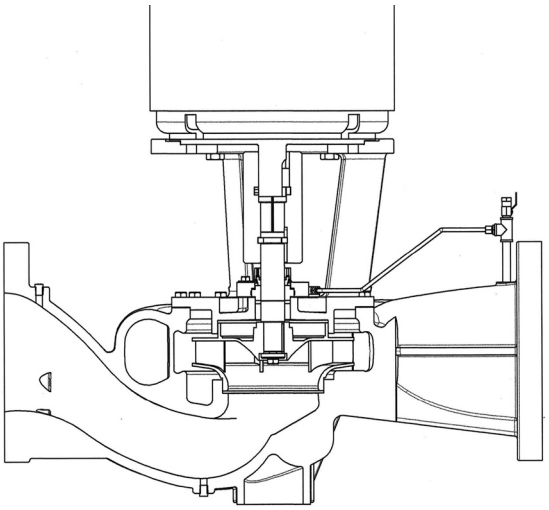

Intended applications

WARNING:

This product can expose you to chemicals including Lead, which is known to the State of California to cause cancer and birth defects or other reproductive harm. For more information go to: *http://www.P65Warnings.ca.gov*.

EN

NOTICE:

- This product is not intended for potable water applications.
- This product is non-submersible. For indoor use only.
- This product has not been investigated, nor is it intended for, use in swimming pools and marine areas.

The pump is intended for use with these pumped fluids:

- Unheated domestic and fresh water
- Boiler feed water
- Condensate
- Hydronic cooling or heating
- Benign liquids
- Pressure boosting
- General liquid transfer

Rotation

Pump rotation is clockwise when viewed from the back of the motor. An arrow is also located on the pump to show the direction of rotation.

3.2 Operational specifications

Mechanical seal specifications

Seal type/Parameter	Standard seal, EPR/ Carbon/Ceramic	Optional seal, FKM/ Carbon/Ceramic	Optional seal, EPR/ Silicon Carbide/ Silicon Carbide	Optional seal, EPR/ Carbon/Tungsten Carbide
Operating temperature range, °F (°C)	-20 to 250 (-29 to 121)	-10 to 225 (-23 to 107)	-20 to 250 (-29 to 121)	-20 to 250 (-29 to 121)
pH range limits	7.0 to 9.0	7.0 to 9.0	7.0 to 12.5	7.0 to 11.0
Resistance to dissolved solids	Low	Low	Medium-High	Low-Medium
Maximum glycol/ water concentration	50/50%	50/50%	60/40%	50/50%

Table notes

1. An external flush is required on low pressure systems that contain a high concentration of abrasives.
2. For operating temperatures above 250°F, a cooled flush is required and is recommended for temperatures above 225°F for optimum seal life. On closed systems, cooling is accomplished by inserting a small heat exchanger in the flush line to cool the seal flushing fluid.
3. Flush-line filters and sediment separators are available on request.

4 Installation

4.1 Preinstallation

EN

Precautions

WARNING:

- When installing in a potentially explosive environment, make sure that the motor is properly certified.
- You must ground (earth) all electrical equipment. This applies to the pump equipment, the driver, and any monitoring equipment. Test the ground (earth) lead to verify that it is connected correctly.
- Motors without built-in protection must be provided with contactors and thermal overload protection for single-phase motors, or starters with heaters for three-phase motors. (See the nameplate on the drive unit to select properly-sized overloads.)

NOTICE:

Supervision by an authorized Xylem representative is recommended to ensure proper installation. Failure to do so may result in equipment damage or decreased performance.

Evaluate the installation in order to determine that the Net Positive Suction Head Available ($NPSH_A$) meets or exceeds the Net Positive Suction Head Required ($NPSH_R$), as stated by the pump performance curve.

4.1.1 Pump mounting guidelines

Series e–80SC pumps can only be mounted with the motor shaft vertical (motor shaft down).

The optional Integrated Technologic with Sensorless Control (ITSC) or Integrated Technologic (IT) can be oriented to different positions relative to the pump nozzles. This can be easily changed during pump installation by removing the motor mounting capscrews, raising the motor assembly slightly, 0.015 to 0.030” (if needed), and rotating the motor assembly around the pump centerline. Raising the motor assembly more than 0.030” could damage the mechanical seal. Replace the motor capscrews when the preferred position is determined.

CAUTION:

The pump and motor assembly must be properly supported during this procedure to prevent the pump unit or motor assembly from falling. Failure to properly support the pump and motor assembly could result in personal injury and or property damage.

4.1.2 Pump location guidelines

WARNING:

Assembled units and their components are heavy. Failure to properly lift and support this equipment could result in serious physical injury and/or equipment damage. Lift equipment only at the specifically identified lifting points. Lifting devices such as eyebolts, slings, and spreaders must be rated, selected, and used for the entire load being lifted.

Guideline	Explanation/comment
Keep the pump as close to the liquid source as practically possible. If the pump is not on a closed system, locate the pump so that the fewest number of bends or elbows in the suction pipe are needed.	This minimizes the friction loss and keeps the suction piping as short as possible.

EN

Guideline	Explanation/comment
Make sure that the space around the pump is sufficient.	This facilitates ventilation, inspection, maintenance, and service.
If you require lifting equipment such as a hoist or tackle, make sure that there is enough space above the pump. For pumps with the optional ITSC/IT installed, be careful not to damage the ITSC/IT during lifting. Do not wrap the sling around the ITSC/IT.	This makes it easier to properly use the lifting equipment and safely remove and relocate the components to a safe location.
Protect the unit from weather and water damage due to rain, flooding, and freezing temperatures.	This is applicable if nothing else is specified.
Do not install and operate the equipment in closed systems unless the system is constructed with properly-sized safety devices and control devices.	Acceptable devices: • Pressure relief valves • Expansion tanks • Pressure controls • Temperature controls • Flow controls If the system does not include these devices, consult the engineer or architect in charge before you operate the pump.
Take into consideration the occurrence of unwanted noise and vibration.	The best pump location for noise and vibration absorption is on a concrete floor with subsoil underneath.
If the pump location is overhead, undertake special precautions to reduce possible noise transmission.	Consider a consultation with a noise specialist.
When possible, locate the pump below the fluid level.	This facilitates priming, ensures a steady flow of liquid, and provides a positive suction head on the pump.

4.1.3 Piping checklist

WARNING:

- The heating of water and other fluids causes volumetric expansion. The associated forces can cause the failure of system components and the release of high-temperature fluids. In order to prevent this, install properly sized and located compression tanks and pressure-relief valves. Failure to follow these instructions could result in serious personal injury or death, or property damage.
- Avoid serious personal injury and property damage. Make sure that the flange bolts are adequately torqued.

NOTICE:

Never force piping to make a connection with a pump.

Check	Explanation/comment	Checked
Check that a section of straight pipe, with a length that is five times its diameter, is installed between the suction side of the pump and the first elbow, or that a B&G Suction Diffuser Plus is installed.	This reduces suction turbulence by straightening the flow of liquid before it enters the pump.	
Check that the suction and discharge pipes are supported independently by use of pipe hangers near the pump.	This eliminates pipe strain on the pump.	
Check that there is a strong, rigid support for the suction and discharge lines.	As a rule, ordinary wire or band hangers are not adequate to maintain proper alignment.	

EN

Check	Explanation/comment	Checked
For pumps with flanges, check that the bolt holes in the pump flanges match the bolt holes in the pipe flanges.	–	
Check that the suction or discharge lines are not forced into position.	Coupling and bearing wear will result if suction or discharge lines are forced into position. The code for Pressure Piping (ASME 31.1) lists many types of supports available for various applications.	
Check that fittings for absorbing expansion are installed in the system when considerable temperature changes are expected.	This helps to avoid strain on the pump.	
Check that you have a foot valve of equal or greater area than the pump suction piping when you use in an open system with a suction lift.	Prevent clogging by using a strainer at the suction inlet next to the foot valve. Make sure that the strainer has an area three times that of the suction pipe with a mesh hole diameter of no less than 0.25 in. (0.64 cm).	
Check that flexible piping is used on both the suction and discharge sides of the pump when you use an isolation base.	–	
Check that a B&G Triple Duty® valve is installed in the discharge line.	This valve serves as a check valve that protects the pump from water hammer, and serves as an isolation valve for servicing and for throttling.	
Check that the pipeline has isolation valves around the pump and has a drain valve in the suction pipe.	–	

4.2 Typical pump installation

Various installation arrangements can be used as described below.

Figure 4

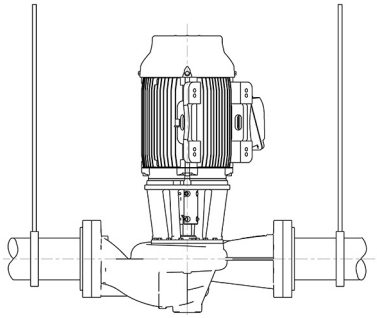

Series e-80SC pumps can be installed directly in the piping with pipe hangers adequate to carry the loads from the pump and piping. See *Figure 4* on page 14

Figure 5

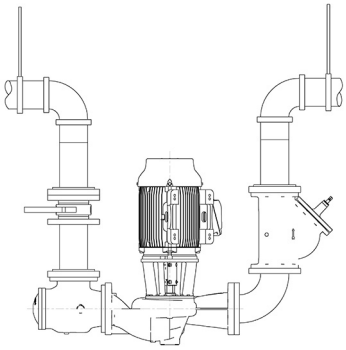

In many installations, the piping is installed near the ceiling with the pump located close to the floor for ease of maintenance. Pumps with up to 4 inch nozzles and up to 286 NEMA frame motors can be installed in this configuration with pipe hangers adequate to carry the loads from the pump, piping and piping accessories. Larger pumps can be installed in this configuration but require either the optional B&G Flange Supports or a floor support under the discharge elbow and an adjustable support leg under the B&G Suction Diffuser Plus. See *Figure 5* on page 14

EN

Figure 6

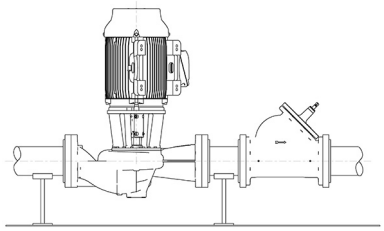

Pumps can be installed in the piping with floor mounted saddles adequate to carry the loads from the pump and piping. See *Figure 6* on page 15

Figure 7

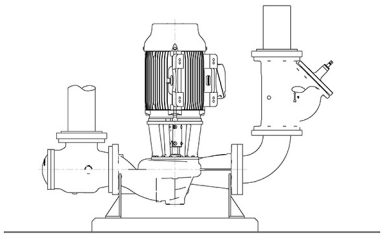

Optional B&G Flange Supports can be used when rigid pump support to the floor or isolation base is required. The supports are installed on the back side of the pump flanges and have tapped holes to accept the flange bolting and have mounting holes in their bases for anchor bolts. Pipe supports (not shown) are required such that the pump flanges are not supporting the piping. See *Figure 7* on page 15

Figure 8

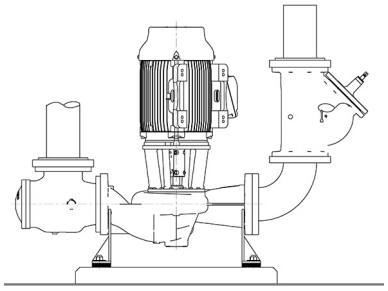

Alternately with the optional B&G Flange Supports, isolation pads can be used between the support and the floor. See *Figure 8* on page 15

Figure 9

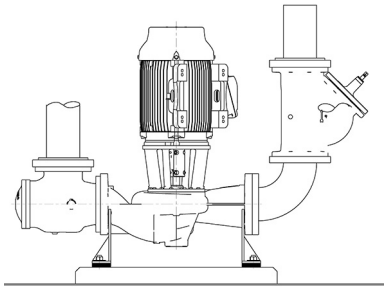

For seismic region installation, use seismically-rated isolation pads between the flange supports and the concrete foundation. See *Figure 9* on page 15

Figure 10

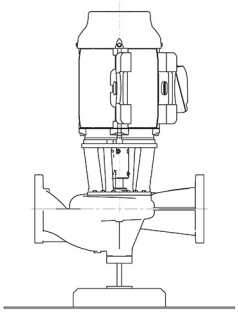

e-80SC pumps have a four bolt circle on the bottom of the volute to accept an ANSI/ASME flange that can be used with a connected pipe as a temporary pump support while the permanent pump piping or pump supports are being fitted to the pump. This support can only be used to handle the pump weight as it is not suitable to resist loads in other directions. See *Figure 10* on page 15

For installations in grooved piping systems when the pump is supported by the piping, flange locking type grooved piping connections are required to prevent the pump from rotating in the piping.

EN

4.3 Typical system installation

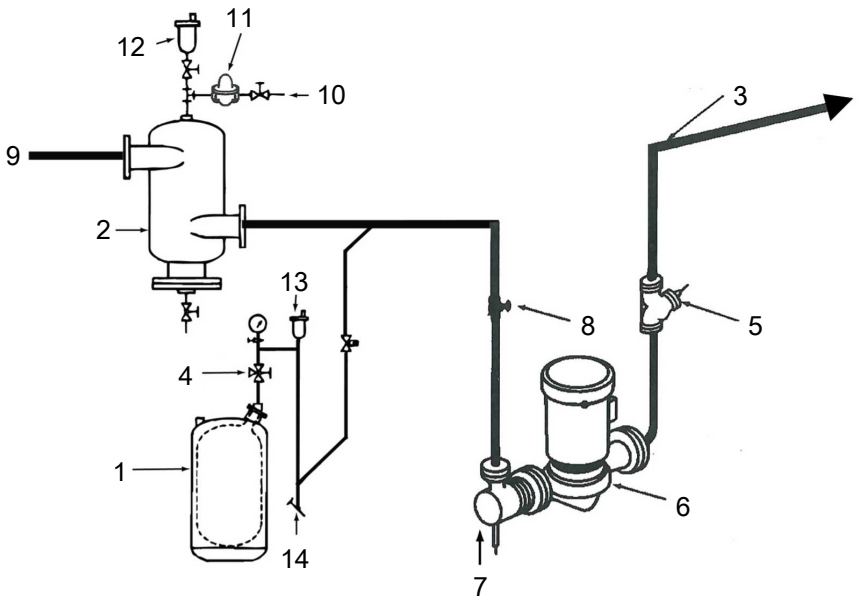

1. Expansion tank
2. B&G Rolairtrol® air separator
3. Supply to system
4. TPV tank purge system
5. B&G Triple Duty® valve
6. B&G Series e−80SCPump
7. B&G Suction Diffuser Plus
8. Isolation valve
9. Pipe from boiler, chiller, or converter
10. Cold water supply
11. B&G Pressure Reducing Valve
12. B&G Model 107A — high capacity vent
13. B&G #7 or #87 Air Vent
14. Drain valve

Check that the control and safety devices have these characteristics:

- Properly sized for their purpose
- Placed correctly in the system before putting the system into operation

5 Commissioning, startup, operation, and shutdown

5.1 Preparation for startup

EN

WARNING:

- Failure to follow these precautions before you start the unit could lead to serious personal injury and equipment failure.
- Do not operate the pump below the minimum rated flows or with the suction or discharge valves closed. These conditions can create an explosive hazard due to vaporization of pumped fluid and can quickly lead to pump failure and physical injury.
- If the pump, motor, or piping operate at extremely high or low temperatures, then guarding or insulation is required. Failure to follow these instructions could result in serious personal injury or death, and property damage.
- Always disconnect and lock out power to the driver before you perform any installation or maintenance tasks. Failure to disconnect and lock out driver power could result in serious physical injury.
- Operating the pump in reverse rotation can result in the contact of metal parts, heat generation, and breach of containment.

NOTICE:

- Verify the driver settings before you start any pump.
- Make sure that the warm-up rate does not exceed 2.5°F (1.4°C) per minute.

You must follow these precautions before you start the pump:

- Flush and clear the system thoroughly to remove dirt or debris in the pipe system in order to prevent premature failure at initial startup.
- Bring variable-speed drivers to the rated speed as quickly as possible.
- Run a new or rebuilt pump at a speed that provides enough flow to flush and cool the close-running surfaces of the stuffing-box bushing.
- If temperatures of the pumped fluid will exceed 200°F (93°C), then warm up the pump prior to operation. Circulate a small amount of fluid through the pump until the casing temperature is within 100°F (38°C) of the fluid temperature.

At initial startup, do not adjust the variable-speed drivers or check for speed governor or over-speed trip settings while the variable-speed driver is coupled to the pump. If the settings have not been verified, then uncouple the unit and refer to instructions supplied by the driver manufacturer.

5.1.1 Check the rotation

WARNING:

- Operating the pump in reverse rotation can result in the contact of metal parts, heat generation, and breach of containment.
- Always disconnect and lock out power to the driver before you perform any installation or maintenance tasks. Failure to disconnect and lock out driver power could result in serious physical injury.

1. Unlock power to the driver.
2. Make sure that everyone is clear, and then jog the driver long enough to determine that the direction of rotation corresponds to the arrow on the pump.
3. Lock out power to the driver.

EN

5.2 Prime the pump

CAUTION:

Do not run the pump dry.

Make sure that the pump body is full of liquid before startup. If the system does not automatically fill the pump body with liquid, then you must manually prime the pump.

1. Loosen the vent plugs on the pump body. Loosen the vent valve on the flush line assembly.
2. While venting the air from the pump body, rotate the pump shaft a few times by hand.
3. After all air has been purged from the pump, close the vent plugs.

5.3 Start the pump

CAUTION:

- Observe the pump for vibration levels, bearing temperature, and excessive noise. If normal levels are exceeded, shut down the pump and resolve the issue.

If your Series e-80SC pump is equipped with the optional ITSC or IT drive, refer to the ITSC/IT instruction manual for proper setup and running requirements.

Before you start the pump, you must perform these tasks:

- Open the suction valve.
- Open any recirculation or cooling lines.

1. Fully close or partially open the discharge valve, depending on system conditions.
2. Start the driver.
3. Slowly open the discharge valve until the pump reaches the desired flow.
4. Immediately check the pressure gauge to ensure that the pump quickly reaches the correct discharge pressure.
5. If the pump fails to reach the correct pressure, perform these steps:
   a) Stop the driver.
   b) Prime the pump again.
   c) Restart the driver.
6. Monitor the pump while it is operating:
   a) Check the pump for bearing temperature, excessive vibration, and noise.
   b) If the pump exceeds normal levels, then shut down the pump immediately and correct the problem.
7. Repeat steps 5 and 6 until the pump runs properly.

EN

5.4 Pump operation precautions

General considerations

CAUTION:

- Vary the capacity with the regulating valve in the discharge line. Never throttle the flow from the suction side since this can result in decreased performance, unexpected heat generation, and equipment damage.
- Do not overload the driver. Driver overload can result in unexpected heat generation and equipment damage. The driver can overload in these circumstances:
  - The specific gravity of the pumped fluid is greater than expected.
  - The pumped fluid exceeds the rated flow rate.
- Make sure to operate the pump at or near the rated conditions. Failure to do so can result in pump damage from cavitation or recirculation.

Operation at reduced capacity

WARNING:

Never operate any pumping system with a blocked suction and discharge. Operation, even for a brief period under these conditions, can cause confined pumped fluid to overheat, which results in a violent explosion. You must take all necessary measures to avoid this condition.

CAUTION:

Avoid excessive vibration levels. Excessive vibration levels can damage the bearings, stuffing box or seal chamber, and the mechanical seal, which can result in decreased performance.

NOTICE:

- Avoid increased radial load. Failure to do so can cause stress on the shaft and bearings.
- Avoid heat build-up. Failure to do so can cause rotating parts to score or seize.
- Avoid cavitation. Failure to do so can cause damage to the internal surfaces of the pump.

Operation under freezing conditions

NOTICE:

Do not expose an idle pump to freezing conditions. Drain all liquid that is inside the pump and the flush lines. Failure to do so can cause liquid to freeze and damage the pump.

5.5 Shut down the pump

1. Slowly close the discharge valve.
2. Shut down and lock the driver to prevent accidental rotation.

5.6 Vibration

After startup, vibration can be measured on the pump bracket at the base of the horizontal (H), vertical (V), and axial (A) directions. The maximum expected value is 0.15 in/sec (3.8 mm/sec) RMS (ANSI/HI 9.6.4) when operating in the Preferred Operating Range (POR) flows from 70% to 120% of the best efficiency point (BEP) (ANSI/HI 9.6.3). Operation outside the POR, but within the Allowable Operating Range (AOR) from minimum flow to 85% of the end of the curve increases the vibration value by 30%. If the vibration recorded exceeds these values, shut down the pump, diagnose and fix the problem, re-start, and re-check the vibration.

6 Maintenance

EN

6.1 Lubrication

The pump motor has been lubricated at the factory. Keep the motor properly lubricated in accordance with the motor manufacturer's instructions.

6.2 Disassembly

6.2.1 Disassembly precautions

This manual clearly identifies accepted methods for disassembling units. These methods must be adhered to.

WARNING:

- Make sure that the pump is isolated from the system and that pressure is relieved before you disassemble the pump, remove plugs, open vent or drain valves, or disconnect the piping.
- Always disconnect and lock out power to the driver before you perform any installation or maintenance tasks. Failure to disconnect and lock out driver power could result in serious physical injury.
- Crush hazard. The unit and the components can be heavy. Use proper lifting methods and wear steel-toed shoes at all times.

NOTICE:

Make sure that all replacement parts are available before you disassemble the pump for overhaul.

6.2.2 Drain the pump

CAUTION:

- Allow all system and pump components to cool before you handle them to prevent physical injury.

1. Close the isolation valves on the suction and discharge sides of the pump.

   You must drain the system if no valves are installed.
2. Open the drain valve.

   Do not proceed until liquid stops coming out of the drain valve. If liquid continues to flow from the drain valve, the isolation valves are not sealing properly and you must repair them before you proceed.
3. Leave the drain valve open and remove the drain plug located on the bottom of the pump housing.

   Do not reinstall the plug or close the drain valve until the reassembly is complete.
4. Disconnect all auxiliary piping and tubing.
5. Drain the liquid from the piping and flush the pump if it is necessary.

6.2.3 Impeller trimming guidelines

Machining

When it is necessary to reduce the pump flow rate and generated head by trimming the impeller diameter, the following guidelines apply for stainless steel impellers:

EN

- Review the pump hydraulic selection data and consult your local Xylem representative to select the proper reduced diameter.
- For the e-80SC 5x5x7B model, before trimming the impeller refer to the angle cut guidelines below.
- For machining recommendations, see P2002535 Stainless Steel Impeller Trimming Guidelines.

Balancing

It is recommended that impellers trimmed more than 5% in diameter be rebalanced per ISO 1940 grade G6.3.

Angle cut guidelines

Model e-80SC 5x5x7B pump impellers must be angle cut at reduced diameters according to the following information.

Figure 11: 5x5x7B impeller trim — 0.125 in. (3.17 mm) increments

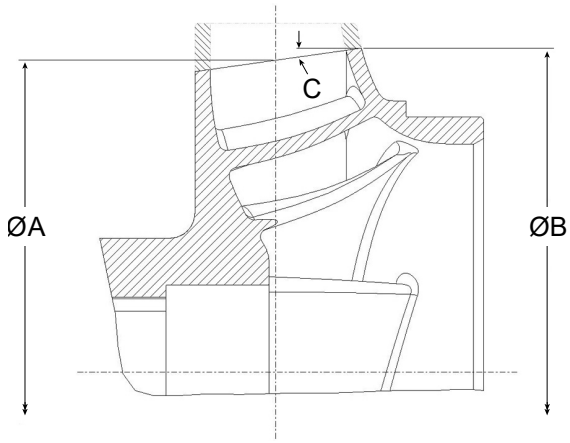

A	B	C
Hydraulic diameter, nominal, as shown on selection curves	Diameter at impeller inlet side shroud	Trim angle
From maximum diameter 7 in. (177.8 mm) to 6.125 in. (155.6 mm)	Use diameter from selection curves	0 degrees, no angle
6, 5.875, 5.75, 5.625 in. (162.4 to 142.9 mm)	B = A plus 0.250 in. (6.35 mm)	8 degrees
5.5, 5.375, 5.25, 5.125, minimum 5 in. (139.7 to 127.0 mm)	B = A plus 0.375 in. (9.53 mm)	8 degrees

6.3 Reassembly

6.3.1 Replace the seal

The inside and outside seal can be replaced without removing the motor.

1. Remove the coupling guard.
2. Remove the flush line from the seal cap.
3. If an outside seal, put seal clips in the seal and then loosen the set screws that hold the seal on the shaft.
4. Remove the coupler halves. Tape the collar rings together in pairs as assembled previously.

   The shaft drops down when the coupling is removed.
5. If an outside seal, remove the seal.

EN

6. Remove the seal cap or seal gland through the space between shafts.
   a) Remove the seal seat from the seal cap or gland.
   b) If an inside seal, remove the seal using a pair of screwdrivers, to pry out the seal.
7. Clean the seal box, seal cap, or gland and shaft.

CAUTION:

Avoid touching the carbon face and ceramic face of the seal and getting it dirty.

8. Place the seal seat in the seal cap or gland.
9. For an outside seal:
   a) Install the seal seat with seal cap or gland (including the gaskets on either side of the seat) over the end of the shaft and fasten to the motor bracket with four cap screws and washers. Tighten seal gland cap screws evenly to avoid misalignment one quarter turn past hand tight.
   b) Leave the seal holding clips on the rotating part of the seal, lubricate the bore of the seal with soapy water or other suitable lubricant such as International Products Corporation P-80®, and install the rotating part of the seal on the shaft with the rotating face toward the seal seat.
   c) After the coupling assembly (see below), tighten the seal set screws on the shaft and remove the seal holding clips. The seal is now set. Keep the seal holding clips in case the seal has to be removed in the future.

Figure 12: Outside seal

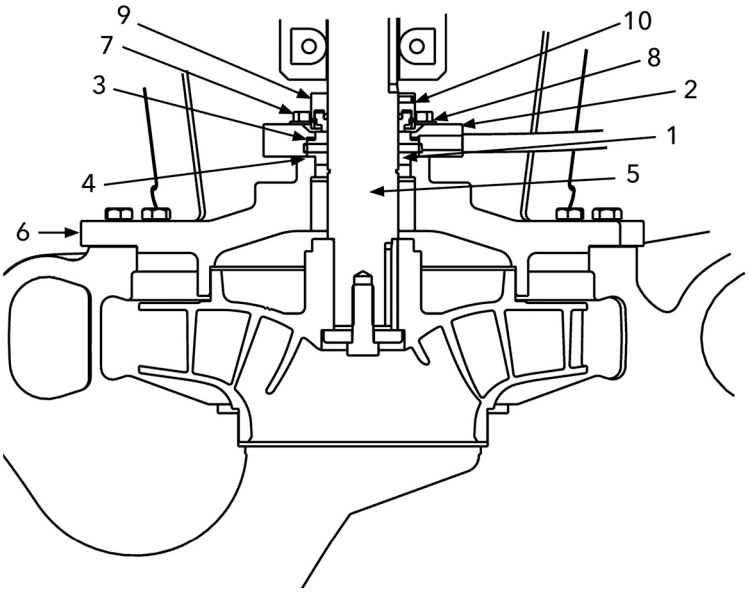

1. Seal seat
2. Seal cap or gland
3. Seal seat gasket (seat to cap or gland)
4. Seal seat gasket (seat to motor bracket)
5. Shaft
6. Motor bracket
7. Seal gland cap screws
8. Washers
9. Rotating part of the seal
10. Seal set screws

10. For an inside seal:

EN

a) Lubricate the bore of the rotating part of the seal with soapy water or other suitable lubricant such as International Products Corporation P-80®, and install the seal on the shaft with the rotating face up toward the motor until it contacts the snap ring.
b) Install the seal seat with seal cap or gland (with the gasket between the cap and the motor bracket) over the end of the shaft and affix to the motor bracket with four cap screws and washers. Tighten seal gland cap screws evenly to avoid misalignment one quarter turn past hand tight.
c) The seal is now fully installed and will be set after coupling assembly.

Figure 13: Inside seal

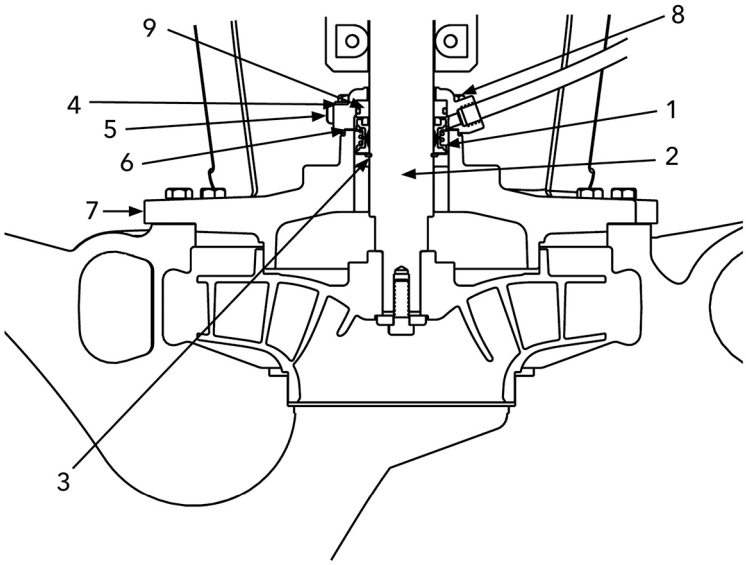

1. Rotating part of the seal
2. Shaft
3. Snap ring
4. Seal seat
5. Seal cap or gland
6. Seal cap gasket
7. Motor bracket
8. Seal gland cap screws
9. Washers

11. Reinstall the flush line.
12. Reinstall the coupling guard.

6.3.2 Motor collar ring setting

CAUTION:

The motor collar ring must be set on the motor shaft at the correct position and set screws torqued to the proper value.

The motor collar ring must be set on the motor shaft at a specified distance for both TC and TSC motors to insure the pump impeller is in the proper position during pump operation. The distance to set the collar (DC) is measured from the end of the motor shaft to the surface of the collar ring closest to the pump.

EN

Figure 14: Motor collar ring setting for TC/TSC motor motor

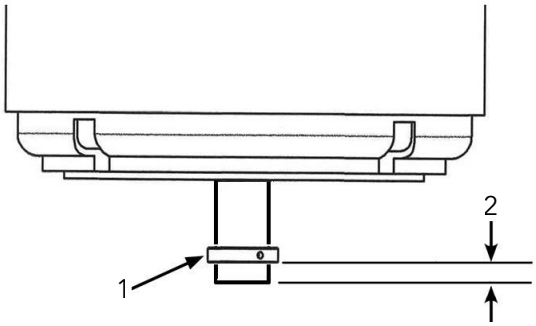

1. Collar ring
2. DC

The collar ring is held in position on the motor shaft with set screws. These set screws must be tightened to the proper torque to ensure that the collar does not slip as a result of pump rotor weight and pump hydraulic thrust.

Place a small amount of Loctite 222MS on each setscrew before installing them into the motor collar.

Table 1: Collar setting distance

This table describes the collar setting distance, set screw size, and set screw torque for TC and TSC motors.

Motor frame size	Distance Collar (DC) in (mm)	Set screw size	Set screw torque in-lbs
143TC – 145TC	0.125 (3.18)	#8–32UNC	20
182TC – 184TC	0.125 (3.18)	#8–32UNC	20
213TC – 215TC	0.125 (3.18)	#10–32UNF	36
254TC – 256TC	0.125 (3.18)	#10–32UNF	36
284TC – 286TC	0.125 (3.18)	1/4–28UNF	87
284TSC – 286TSC	0.125 (3.18)	1/4–28UNF	87
324TC – 326TC	0.125 (3.18)	1/4–28UNF	87
324TSC – 326TSC	0.125 (3.18)	5/16–24UNF	165
364TC-365TC	0.125 (3.18)	1/4–28UNF	87
364TSC – 365TSC	0.125 (3.18)	5/16–24UNF	165
404TC-405TC	0.125 (3.18)	1/4–28UNF	87
404TSC-405TSC	0.250 (6.36)	5/16–24UNF	165
444TC-445TC	0.125 (3.18)	5/16–24UNF	165
444TSC-445TSC	0.563 (14.28)	5/16–24UNF	165
447TC-449TC	0.125 (3.18)	5/16–24UNF	165

6.3.3 Assemble the coupler

For all pump sizes, except 12x12x13 and 14x14x14:

1. Ensure the coupler halves are clean and burr free. Use sand paper to remove any burrs and sharp edges with the keyways, set screw collar groove and tapered washer groove. The collar, tapered washer and keys must slide within their grooves without interference.
2. If removed, install the set screw collar ring on the motor shaft according to the instructions in *Motor collar ring setting* on page 23.

3. Upon disassembly, the impeller and pump shaft weight cause the rotor to move downward and rest at the bottom of the volute. During reassembly, pump shaft and impeller will be pulled back up into position by the tapered washer acting against the tapered groove in the coupler.
4. After the seal is pre-assembled onto the pump according the section above, assemble the tapered washer with cap screw and lock washer on the end of the pump shaft. An allen wrench can be placed in the hole on the side of the shaft to prevent it from rotating while tightening the cap screw.
5. Install the keys in the motor and pump shafts and turn the motor shaft until the keys line up.
6. Place the coupler half with the key ways on the motor setscrew collar and on both keys. Check that the tapered washer installed on the end of the pump shaft is starting to engage the taper groove in the coupler half.
7. Place the other half of the coupler around the shaft.

Figure 15: Coupler

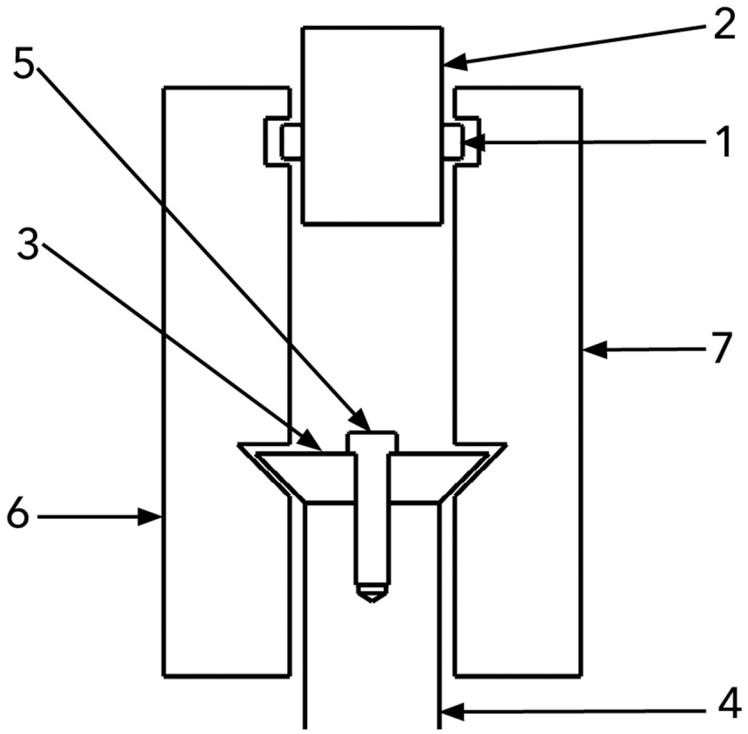

1. Set screw collar ring
2. Motor shaft
3. Tapered washer
4. Pump shaft with attached impeller (not shown)
5. Taper washer cap screw and lock washer
6. Coupler half
7. Coupler half

8. Insert the coupler cap screws and place a lock washer and nut on each screw. The bolt heads at each level on opposite sides of the coupling should face in different directions for balance as shown in *Figure 16* on page 26.
9. Tighten all of the bolts evenly to avoid mis-alignment. The shaft and impeller are pulled up in to position as the bolts are tightened. Then rotate the shaft by hand and make sure the gap on both sides of the coupler is approximately equal. Make sure the gap from the

EN

top to the bottom of the coupler is even. If the gap is not equal, loosen the bolts and repeat the tightening step.

10. Slowly rotate the shaft by hand and check to see if any rubs occur.
    a) If no rubs occur, prime and start the pump run for two minutes and determine if the pump run smooth and vibration free.
    b) If problems occur, check the installation and repeat as necessary.

Figure 16: Top view

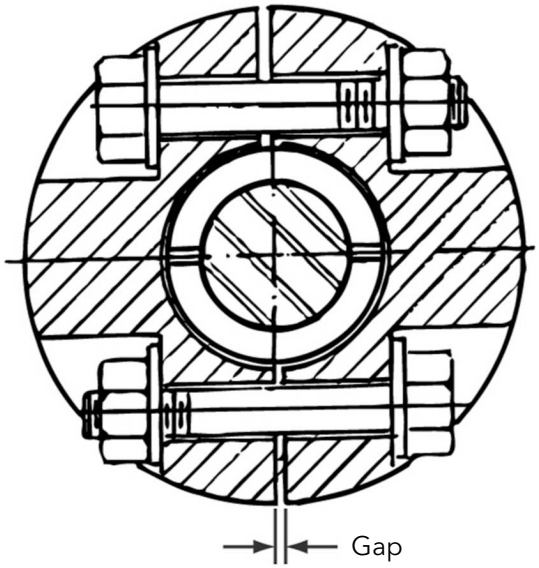

For pump sizes 12x12x13 and 14x14x14:

1. Ensure the coupler halves are clean and burr free. Use sand paper to remove any burrs and sharp edges with the keyways, set screw collar groove and pump shaft split ring groove. The collar, split ring and keys must slide within their grooves without interference.
2. If removed, install the set screw collar ring on the motor shaft according to the instructions above.
3. Upon disassembly, the impeller and pump shaft weight cause the rotor to move downward and rest at the bottom of the volute.
4. After the seal is pre-assembled onto the pump according the section above, assemble the split ring in the pump shaft.
5. Install the keys in the motor and pump shafts and turn the motor shaft until the keys line up.
6. Place the coupler half with the key ways on the motor setscrew collar and on both keys. Use a crow bar on the pump shaft split ring to lift the impeller and shaft until the split ring groove is in line with the groove in the coupling.
7. Place the other half of the coupler around the shaft.
8. Insert the coupler cap screws and place a lock washer and nut on each screw. The bolt heads at each level on opposite sides of the coupling should face in different directions for balance as shown in the *Figure 16* on page 26.
9. Tighten all of the bolts evenly to avoid mis-alignment. Then rotate the shaft by hand and make sure the gap on both sides of the coupler is approximately equal. Make sure the gap from the top to the bottom of the coupler is even. If the gap is not equal, loosen the bolts and repeat the tightening step.
10. Slowly rotate the shaft by hand and check to see if any rubs occur.
    a. If no rubs occur, prime and start the pump run for two minutes and determine if the pump run smooth and vibration free.
    b. If problems occur, check the installation and repeat as necessary.

EN

6.3.4 Screw torque values

Capscrew torque in ft-lb (Nm)

Capscrew type	Head marking	Capscrew diameter (in inches)								
		1/4	5/16	3/8	7/16	1/2	5/8	3/4	7/8	1
SAE grade 2		6 (8)	13 (18)	25 (34)	38 (52)	60 (81)	120 (163)	190 (258)	210 (285)	300 (407)
Brass and stainless steel	or	4 (5)	10 (14)	17 (23)	27 (37)	42 (57)	83 (113)	130 (176)	200 (271)	300 (407)
SAE grade 5		10 (14)	20 (27)	35 (47)	60 (81)	90 (122)	180 (244)	325 (440)	525 (712)	800 (1085)

6.3.5 Dealer servicing

If trouble occurs that cannot be rectified, contact your local sales and service representative and be prepared to provide this information:

1. Complete nameplate data of pump and motor
2. Suction and discharge pipe pressure gauge readings
3. Ampere draw of the motor
4. A sketch of the pump hook-up and piping

7 Product warranty

Commercial warranty

EN

Warranty. For goods sold to commercial buyers, Seller warrants the goods sold to Buyer hereunder (with the exception of membranes, seals, gaskets, elastomer materials, coatings and other "wear parts" or consumables all of which are not warranted except as otherwise provided in the quotation or sales form) will be (i) be built in accordance with the specifications referred to in the quotation or sales form, if such specifications are expressly made a part of this Agreement, and (ii) free from defects in material and workmanship for a period of one (1) year from the date of installation or eighteen (18) months from the date of shipment (which date of shipment shall not be greater than thirty (30) days after receipt of notice that the goods are ready to ship), whichever shall occur first, unless a longer period is specified in the product documentation (the “Warranty”).

Except as otherwise required by law, Seller shall, at its option and at no cost to Buyer, either repair or replace any product which fails to conform with the Warranty provided Buyer gives written notice to Seller of any defects in material or workmanship within ten (10) days of the date when any defects or non-conformance are first manifest. Under either repair or replacement option, Seller shall not be obligated to remove or pay for the removal of the defective product or install or pay for the installation of the replaced or repaired product and Buyer shall be responsible for all other costs, including, but not limited to, service costs, shipping fees and expenses. Seller shall have sole discretion as to the method or means of repair or replacement. Buyer’s failure to comply with Seller’s repair or replacement directions shall terminate Seller’s obligations under this Warranty and render the Warranty void. Any parts repaired or replaced under the Warranty are warranted only for the balance of the warranty period on the parts that were repaired or replaced. Seller shall have no warranty obligations to Buyer with respect to any product or parts of a product that have been: (a) repaired by third parties other than Seller or without Seller’s written approval; (b) subject to misuse, misapplication, neglect, alteration, accident, or physical damage; (c) used in a manner contrary to Seller’s instructions for installation, operation and maintenance; (d) damaged from ordinary wear and tear, corrosion, or chemical attack; (e) damaged due to abnormal conditions, vibration, failure to properly prime, or operation without flow; (f) damaged due to a defective power supply or improper electrical protection; or (g) damaged resulting from the use of accessory equipment not sold or approved by Seller. In any case of products not manufactured by Seller, there is no warranty from Seller; however, Seller will extend to Buyer any warranty received from Seller’s supplier of such products.

THE FOREGOING WARRANTY IS EXCLUSIVE AND IN LIEU OF ANY AND ALL OTHER EXPRESS OR IMPLIED WARRANTIES, GUARANTEES, CONDITIONS OR TERMS OF WHATEVER NATURE RELATING TO THE GOODS PROVIDED HEREUNDER, INCLUDING WITHOUT LIMITATION ANY IMPLIED WARRANTIES OF MERCHANTABILITY AND FITNESS FOR A PARTICULAR PURPOSE, WHICH ARE HEREBY EXPRESSLY DISCLAIMED AND EXCLUDED. EXCEPT AS OTHERWISE REQUIRED BY LAW, BUYER’S EXCLUSIVE REMEDY AND SELLER’S AGGREGATE LIABILITY FOR BREACH OF ANY OF THE FOREGOING WARRANTIES ARE LIMITED TO REPAIRING OR REPLACING THE PRODUCT AND SHALL IN ALL CASES BE LIMITED TO THE AMOUNT PAID BY THE BUYER FOR THE DEFECTIVE PRODUCT. IN NO EVENT SHALL SELLER BE LIABLE FOR ANY OTHER FORM OF DAMAGES, WHETHER DIRECT, INDIRECT, LIQUIDATED, INCIDENTAL, CONSEQUENTIAL, PUNITIVE, EXEMPLARY OR SPECIAL DAMAGES, INCLUDING BUT NOT LIMITED TO LOSS OF PROFIT, LOSS OF ANTICIPATED SAVINGS OR REVENUE, LOSS OF INCOME, LOSS OF BUSINESS, LOSS OF PRODUCTION, LOSS OF OPPORTUNITY OR LOSS OF REPUTATION.

Limited consumer warranty

Warranty. For goods sold for personal, family or household purposes, Seller warrants the goods purchased hereunder (with the exception of membranes, seals, gaskets, elastomer materials, coatings and other "wear parts" or consumables all of which are not warranted except as otherwise provided in the quotation or sales form) will be free from defects in material and workmanship for a period of one (1) year from the date of installation

or eighteen (18) months from the product date code, whichever shall occur first, unless a longer period is provided by law or is specified in the product documentation (the "Warranty").

Except as otherwise required by law, Seller shall, at its option and at no cost to Buyer, either repair or replace any product which fails to conform with the Warranty provided Buyer gives written notice to Seller of any defects in material or workmanship within ten (10) days of the date when any defects or non-conformance are first manifest. Under either repair or replacement option, Seller shall not be obligated to remove or pay for the removal of the defective product or install or pay for the installation of the replaced or repaired product and Buyer shall be responsible for all other costs, including, but not limited to, service costs, shipping fees and expenses. Seller shall have sole discretion as to the method or means of repair or replacement. Buyer's failure to comply with Seller's repair or replacement directions shall terminate Seller's obligations under this Warranty and render this Warranty void. Any parts repaired or replaced under the Warranty are warranted only for the balance of the warranty period on the parts that were repaired or replaced. The Warranty is conditioned on Buyer giving written notice to Seller of any defects in material or workmanship of warranted goods within ten (10) days of the date when any defects are first manifest.

Seller shall have no warranty obligations to Buyer with respect to any product or parts of a product that have been: (a) repaired by third parties other than Seller or without Seller's written approval; (b) subject to misuse, misapplication, neglect, alteration, accident, or physical damage; (c) used in a manner contrary to Seller's instructions for installation, operation and maintenance; (d) damaged from ordinary wear and tear, corrosion, or chemical attack; (e) damaged due to abnormal conditions, vibration, failure to properly prime, or operation without flow; (f) damaged due to a defective power supply or improper electrical protection; or (g) damaged resulting from the use of accessory equipment not sold or approved by Seller. In any case of products not manufactured by Seller, there is no warranty from Seller; however, Seller will extend to Buyer any warranty received from Seller's supplier of such products.

THE FOREGOING WARRANTY IS PROVIDED IN PLACE OF ALL OTHER EXPRESS WARRANTIES. ALL IMPLIED WARRANTIES, INCLUDING BUT NOT LIMITED TO THE IMPLIED WARRANTIES OF MERCHANTABILITY AND FITNESS FOR A PARTICULAR PURPOSE, ARE LIMITED TO ONE (1) YEAR FROM THE DATE OF INSTALLATION OR EIGHTEEN (18) MONTHS FROM THE PRODUCT DATE CODE , WHICHEVER SHALL OCCUR FIRST. EXCEPT AS OTHERWISE REQUIRED BY LAW, BUYER'S EXCLUSIVE REMEDY AND SELLER'S AGGREGATE LIABILITY FOR BREACH OF ANY OF THE FOREGOING WARRANTIES ARE LIMITED TO REPAIRING OR REPLACING THE PRODUCT AND SHALL IN ALL CASES BE LIMITED TO THE AMOUNT PAID BY THE BUYER FOR THE DEFECTIVE PRODUCT. IN NO EVENT SHALL SELLER BE LIABLE FOR ANY OTHER FORM OF DAMAGES, WHETHER DIRECT, INDIRECT, LIQUIDATED, INCIDENTAL, CONSEQUENTIAL, PUNITIVE, EXEMPLARY OR SPECIAL DAMAGES, INCLUDING BUT NOT LIMITED TO LOSS OF PROFIT, LOSS OF ANTICIPATED SAVINGS OR REVENUE, LOSS OF INCOME, LOSS OF BUSINESS, LOSS OF PRODUCTION, LOSS OF OPPORTUNITY OR LOSS OF REPUTATION.

Some states do not allow limitations on how long an implied warranty lasts, so the above limitation may not apply to you. Some states do not allow the exclusion or limitation of incidental or consequential damages, so the above exclusions may not apply to you. This warranty gives you specific legal rights, and you may also have other rights which may vary from state to state.

To make a warranty claim, check first with the dealer from whom you purchased the product or visit www.xylem.com for the name and location of the nearest dealer providing warranty service.

Xylem Inc.
8200 N. Austin Avenue
Morton Grove, IL 60053

Tel: (847) 966–3700
Fax: (847) 965–8379
www.xylem.com/bellgossett

Visit our website for the latest version of this document and more information.
The original instruction is in English. All non-English instructions are translations of the original instruction.
© 2024 – 2025 Xylem Inc. Bell & Gossett is a trademark of Xylem Inc. or one of its subsidiaries. All other trademarks or registered trademarks are property of their respective owners.

P2002880_Rev 8_en-US_2025-10_Series e-80SC