Bell & Gossett
xylem

Submittal
A-616.15C

**Job:** **Representative:**

Unit tag: _____ Order number: _____ Date: _____
Engineer: _____ Submitted by: _____ Date: _____
Contractor: _____ Approved by: _____ Date: _____

# Circuit Sentry™ Flo-Setter II AF2Y Valve Kit

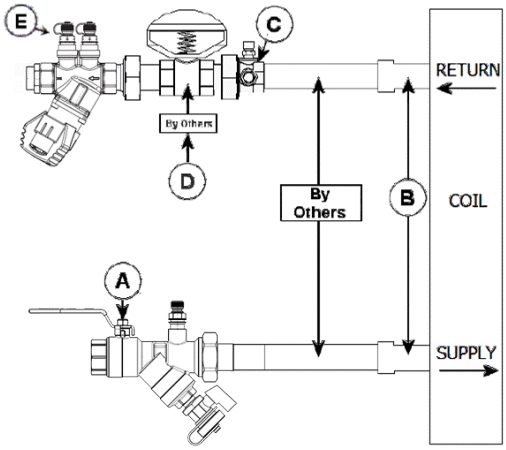


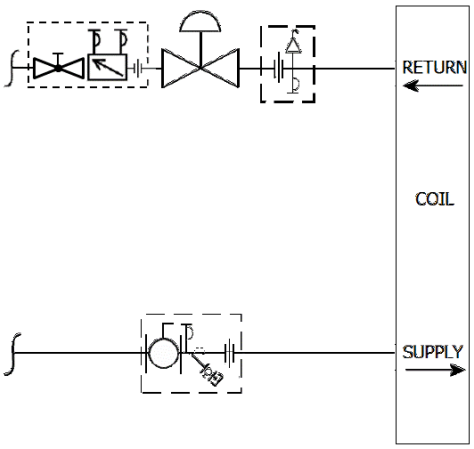


## Description

The Bell & Gossett AF2Y Valve Kit is a packaged and partially pre-assembled collection of common components required for commissioning a terminal unit. Temperature control valves, piping and coils are not supplied by Bell & Gossett.

**The AF2Y Kit consists of:**

| Balloon | Part number | Inlet connection | Outlet connection | Description |
|---|---|---|---|---|
| A | | | | **Model UBY** - combination wye strainer and shut off valve with one pressure / temperature port,drain valve, tailpiece and union end |
| B | | | | Connection size for coil/terminal |
| C | | | | **Model UA -** union accessory with one pressure / temperature port, manual air vent, tailpiece and union end |
| D | | | | Connection size for two-way temperature control valve (by others) |
| E | | | | **Model AF** - Circuit Sentry™ Flo-Setter II, externally adjustable balance and commissioning valve with supplied optional ball isolation/shut off valve, two pressure/temperature ports, tailpiece, and union end |



This information is subject to change without notice. All information presented herein is believed reliable and in accordance with accepted engineering practices. Xylem makes no warranties as to the completeness of this information. Users are responsible for evaluating individual product suitability for specific applications. Xylem assumes no liability whatsoever for any special, indirect or consequential damages arising from the sale, resale or misuse of its products.

© 2026 Xylem Inc. or its affiliate. All rights reserved. Xylem, Bell & Gossett and Circuit Sentry are registered trademarks of Xylem Inc. or one of its subsidiaries. All other trademarks or registered trademarks are the property of their respective owners.



xylem
Let's Solve Water