SPECIFICATION
FULL CIRCLE® TAPPED REPAIR CLAMP
MODEL 239

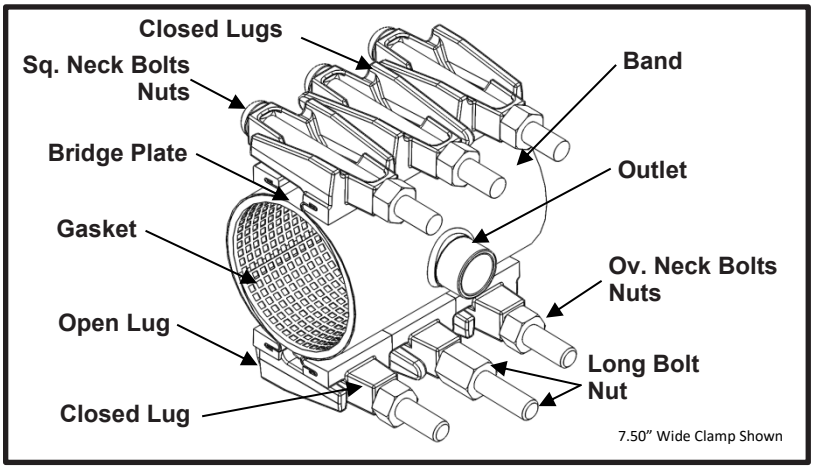

APPLICATIONS

- **Typical Uses**
  - Repair leaks at broken or torn out service connections or branch lines
  - For use on installations where the pipe is drilled prior to installation
- **Standard Pipe Sizes**
  - 4" to 12" nominal
- **Standard Taps**
  - NPT: 1/2", 3/4", 1", 1-1/4", 1-1/2", 2"
  - CC/AWWA: 1/2", 3/4", 5/8", 1", 1-1/4", 1-1/2", 2"
  - BSP: 1/2", 3/4", 1", 1-1/4", 1-1/2", 2"

  See Smith-Blair catalog for available pipe diameter and tap size combinations as some combinations are not available
- **Standard Band Widths**
  - 7.5", 10", 12.5", 15"
- **Type of Pipe**
  - Carbon Steel, Stainless Steel, Ductile Iron, PVC, HDPE DR17 or thicker (with use of spring washers), Asbestos Cement, Copper, Aluminum
- **Working Pressure**
  - Up to 175 psi depending on **pipe size**, type of pipe, type of repair, service conditions, and installation workmanship

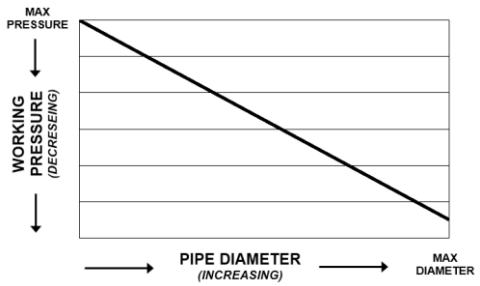

SPECIFICATION
FULL CIRCLE® TAPPED REPAIR CLAMP
MODEL 239

MATERIALS & FEATURES

- **Band**
  - Type 304 Stainless Steel per ASTM A240
  - Band Thickness: 20 gauge thick for clamps 6.90” diameter and smaller
    19 gauge thick for clamps 8.63” diameter and larger
  - Hemmed ends for lug removal in tight applications
- **Lugs**
  - Cast using Ductile Iron 80-55-06 per ASTM A536
  - Flexi-Coat® fusion bonded epoxy finish
  - Slot cast in lug to capture band hem
  - Designed for drop in replaceable bolts
  - One open loop lug and one closed loop lug
- **Gasket**
  - Nitrile (Buna-N) per ASTM D2000
  - Gasket Thickness: 0.250”
  - Compounded to resist water, oil, natural gas, acids, alkalis, most (aliphatic) hydrocarbon fluids, and many other chemicals
  - Temperature range: -20ºF to +180ºF
  - Full 360° gridded face gasket with tapered ends
- **Bridge Plate**
  - Type 304 Stainless Steel quarter-hard per ASTM A240
  - Molded and recessed into gasket
- **Outlet**
  - Type 304 Stainless Steel per ASTM A276
- **Bolts**
  - High Strength Low Alloy (HSLA) Steel per AWWA C111/A21.11
  - Size: 5/8”-11UNC x 6.00” long, Track Head Oval Neck (closed lug to open lug) with Rolled Threads
    5/8”-11UNC x 6.88” long, Track Head Square Neck (closed lug to closed lug) with Rolled Threads
  - Fe/Zn Coated per ASTM F1941-10
- **Long Bolt**
  - HSLA Steel per AWWA C111/A21.11
  - 5/8”-11UNC x 6.88” long, Track Head Oval Neck (closed lug to open lug) with Rolled Threads
  - Fe/Zn Coated per ASTM F1941-10
  - Used on clamps 4.80” diameter and smaller to facilitate the initial clamp installation
- **Nuts**
  - HSLA Steel per AWWA C111/A21.11
  - 5/8”-11UNC, Heavy Hex Semi-Finished
  - Fe/Zn Coated per ASTM F1941-10
- **Long Nut**
  - HSLA Steel per AWWA C111/A21.11
  - 5/8”-11UNC x 1.00” long, Heavy Hex Semi-Finished
  - Fe/Zn Coated per ASTM F1941-10
  - Used to provide hand tightening during initial clamp installation

WELDING

- Welds accomplished using qualified welders
- GTAW weld process utilized

SPECIFICATION
FULL CIRCLE® TAPPED REPAIR CLAMP
MODEL 239

LISTINGS/STANDARDS

- Certified to NSF/ANSI 61 and NSF/ANSI 372
- Meets applicable portions of AWWA C230
- Flexi-Coat® Fusion-Bonded Epoxy Coating meets requirements of AWWA C213

OPTIONS

- Type 316 Stainless Steel band
- Type 304 Stainless Steel hardware with fluoropolymer coated nuts to prevent galling
- Type 316 Stainless Steel hardware with fluoropolymer coated nuts to prevent galling
- Alternative gasket material (e.g. Buna-N, EPDM, etc.)
- Spring washers for use of clamp on HDPE pipe
- Conductivity feature
- Clamps up to 30” wide

NOTES

- Spring washers **are required** when this product is used on DR17 or thicker HDPE pipe (Not recommended for use on HDPE pipe thinner than DR 17)
- Xylem, Smith-Blair, SB stylized, Full Circle and Flexi-Coat are registered trademarks of Xylem, Inc., or one of its subsidiaries.
- These product specifications were correct at the time of publication and are subject to change without notice
- See the Smith-Blair website for part numbers and ordering information
- See the Smith-Blair website for warranty information
- See the Smith-Blair website for corrosion notice



THIS PRODUCT DOES NOT RESTRAIN PIPE MOVEMENT. Proper anchoring is required to prevent pipe pull out. Failure to anchor or improper anchoring can result in dangerous pipe content escape, property damage, serious injury, and/or death. Read the product installation instructions prior to installing this product.

30 Globe Ave, Texarkana, AR 71854
Ph: 870-773-5127 • Fax: 870-773-5212
Toll-Free Numbers: Ph: 800-643-9705 • Fax: 800-648-6792

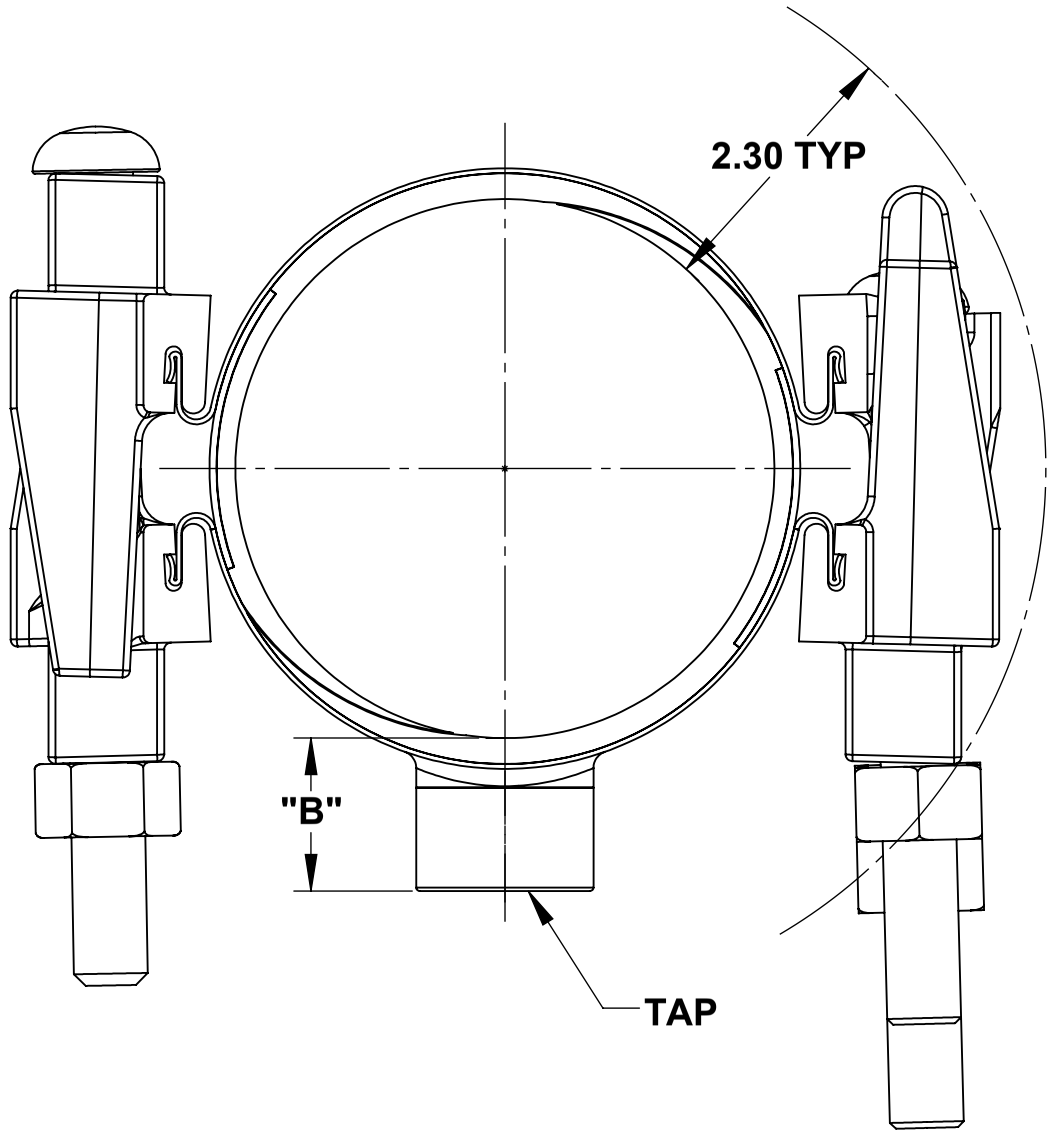

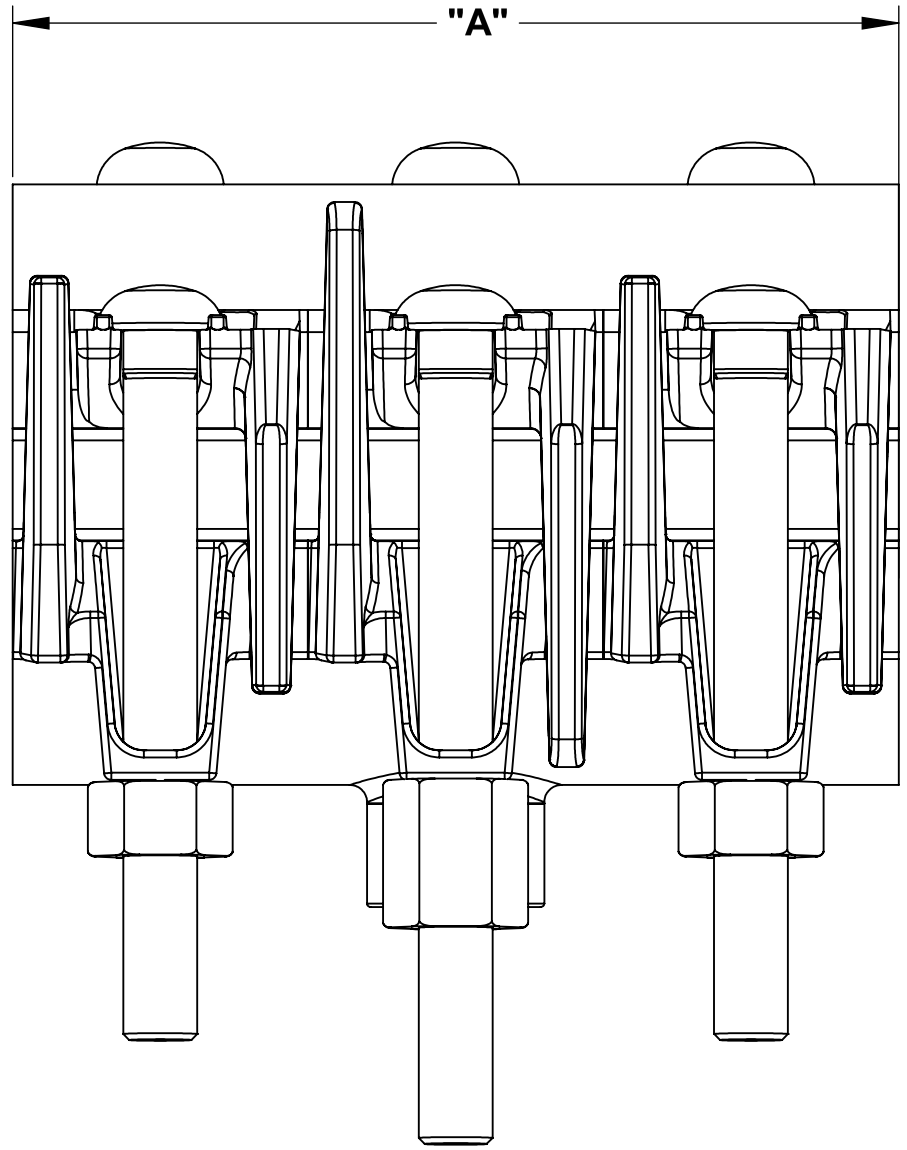

NOTES:

1. **LONG BOLTS ONLY PROVIDED ON CLAMPS 4.50" DIAMETER AND SMALLER.**
2. **SEE SMITH-BLAIR CATALOG FOR AVAILABLE PIPE DIAMETER AND TAP SIZE COMBINATIONS AS SOME COMBINATIONS ARE NOT AVAILABLE.**
3. **7.50" WIDE CLAMP SHOWN OTHER SIZES SIMILAR.**

A	BOLT QUANTITY				LONG NUT QUANTITY	SOCKET SIZE
	OVAL NECK		SQUARE NECK	TOTAL		
	SHORT	LONG				
7.50	2	1	3	6	1	1-1/16"
10.00	2	2	4	8	2	
12.50	3	2	5	10	2	
15.00	4	2	6	12	2	

TAP CHART				
B	SIZE	NPT	CC	BSP
1.30	1/2"	03	04	59
	5/8"	-	05	-
	3/4"	06	07	50
	1"	08	09	51
1.50	1-1/4"	10	11	54
	1-1/2"	12	13	52
	2"	14	-	53

TOLERANCES U.N.O.
.XX= ±.03
.XXX= ±.015
FRACTIONS=
ANGLES=±1°
MACH. FIN=
ALL DIMENSIONS ARE IN INCHES.

NOTES:
REMOVE BURRS AND SHARP EDGES
DO NOT SCALE DWG.

SCALE: N/A

APP'D		DATE	
CK'D		DATE	
DRN	CHD	DATE	5/21/15

TITLE

SPECIFICATION

FULL CIRCLE® TAPPED REPAIR CLAMP MODEL 239

SMITH-BLAIR
TEXARKANA, ARKANSAS

P/N N/A

DWG. NO. SPEC_239.DRW

SHEET 4 OF 4

REV. 9/5/17