GOULDS WATER TECHNOLOGY
xylem

Technical brochure
B2WD R7



2WD

Submersible 2" non-clog sewage pump dual seal with seal sensor probe

xylem

Features

Impeller: Cast iron, semi-open or enclosed, non-clog, dynamically balanced with pump out vanes for mechanical seal protection. Optional silicon bronze impeller available

Casing: Cast iron flanged volute type for maximum efficiency. Designed for easy installation on A10-20 guide rail

Dual mechanical seals

- **Lower:** Silicon carbide vs. silicon carbide sealing faces for superior abrasive resistance, stainless steel metal parts, BUNA-N elastomers
- **Upper:** Carbon vs. ceramic sealing faces, stainless steel metal parts, BUNA-N elastomers

Seal sensor probe: Located in oil-filled chamber. If pumpage should begin to leak past lower seal it indicates to pump control panel a fault has occurred. Requires optional seal fail circuit in the control panel.

Shaft: Corrosion resistant, 400 stainless steel. Threaded design. Locknut on all models to guard against component damage on accidental reverse rotation.

Fasteners: 300 Series stainless steel

Capable of running dry without damage to components

Designed for continuous operation when fully submerged

Agency listings

Tested to UL 778 and CSA 22.2 108 Standards
By Canadian Standards Association
File #LR38549

Applications

Specifically designed for the following uses:

- Sewage systems
- Dewatering/ Effluent
- Water transfer
- Light industrial
- Commercial applications

Anywhere waste or drainage must be disposed of quickly, quietly and efficiently

Specifications

Pump:

- **Solids handling capabilities:** 2" maximum
- **Capacities:** up to 183 GPM
- **Total heads:** up to 52' TDH
- **Discharge size:** 2" NPT threaded companion flange as standard. 3" option available but must be ordered separately. (Order no. A1-3 KIT)
- **Temperature:** 104°F (40°C) continuous, 140°F (60°C) intermittent

Motors

- Fully submerged in high grade turbine oil for lubrication and efficient heat transfer. All ratings are within the working limits of the motor
- Class F insulation

Single-phase (60 Hz):

- All single-phase models feature capacitor start motors for maximum starting torque
- Built-in overload with automatic reset
- 1/3 and 1/2 HP – 16/3 SJTOW with 115 V or 230 V three prong plug
- 3/4 and 1 HP – 14/3 STOW with bare leads

Three-phase (60 Hz):

- Overload protection must be provided in starter unit
- 1/2 – 1 HP – 14/4 STOW with bare leads
- Designed for continuous operation: pump ratings are within the motor manufacturer's recommended working limits, can be operated continuously without damage when fully submerged
- **Bearings:** Upper and lower heavy duty ball bearing construction
- **Power and control cable:** Severe duty rated, oil and water resistant. Epoxy seal on motor end provides secondary moisture barrier in case of outer jacket damage and to prevent oil wicking. Twenty (20) foot standard with optional lengths available.

Model and motor information

Order number	HP	Phase	Volts	RPM	Impeller		Maximum amps	L.R. amps	KVA code	F.L. motor efficiency %	Resistance		Wt. (lbs.)
					Dia. (in.)	Code					Start	Line-Line	
2WD52B0EA	0.33	1	115	1750	4.69	E	10.7	30.0	M	54	11.9	1.7	90
2WD52B8EA			208				6.8	19.5	K	51	9.1	4.2	
2WD52B1EA			230				4.9	14.1	L	53	14.5	8.0	
2WD52C0DA	0.5	1	115		5.00	D	14.5	31.1	J	55	9.3	1.4	94
2WD52C8DA			208				8.0	19.5	K	51	9.1	4.2	
2WD52C1DA			230				7.3	16.5	J	54	11.7	5.6	
2WD52C2DA		3	200				3.8	12.3	K	75	NA	6.7	
2WD52C3DA			230				3.3	9.7	K	75	NA	9.9	
2WD52C4DA			460				1.7	4.9	K	75	NA	39.4	
2WD52D8CA	0.75	1	208		5.38	C	11.0	39.0	K	65	2.6	1.4	98
2WD52D1CA			230				9.4	24.8	J	57	4.8	2.3	
2WD52D2CA		3	200				4.1	21.2	H	74	NA	4.3	
2WD52D3CA			230				3.6	17.3	J	76	NA	5.6	
2WD52D4CA			460				1.8	8.9	J	76	NA	22.4	
2WD52E8BA	1	1	208		5.75	B	14.0	39.0	K	65	2.6	1.4	104
2WD52E1BA			230				12.3	30.5	H	60	4.3	1.8	
2WD52E2BA		3	200				6.0	21.2	H	74	NA	4.3	
2WD52E3BA			230				5.8	17.3	J	76	NA	5.6	
2WD52E4BA			460				2.9	8.9	J	76	NA	22.4	
2WD51B0KA	0.33	1	115	3500	2.94	K	12.4	46.0	M	54	7.5	1.0	90
2WD51B8KA			208				6.8	31.0	K	68	9.7	2.4	
2WD51B1KA			230				6.2	34.5	M	53	9.6	4.0	
2WD51C0JA	0.5	1	115		3.19	J	14.5	46.0	M	54	7.5	1.0	94
2WD51C8JA			208				8.4	31.0	K	68	9.7	2.4	
2WD51C1JA			230				7.6	34.5	M	53	9.6	4.0	
2WD51C3JA		3	230				3.6	18.8	R	70	NA	5.8	
2WD51C4JA			460				1.8	9.4	R	70	NA	23.2	
2WD51C5JA			575				1.5	7.5	R	62	NA	35.3	
2WD51D8HA	0.75	1	208		3.44	H	11.0	31.0	K	68	9.7	2.4	98
2WD51D1HA			230				10.0	27.5	J	65	12.2	2.7	
2WD51D3HA		3	230				5.4	15.7	K	68	NA	8.6	
2WD51D4HA			460				2.7	7.9	K	68	NA	34.2	
2WD51D5HA			575				2.2	9.9	L	78	NA	26.5	
2WD51E8AA	1	1	208		3.75	A	14.5	59.0	K	68	9.3	1.1	104
2WD51E1AA			230				13.0	36.2	J	69	10.3	2.1	
2WD51E3AA		3	230				7.5	24.1	L	79	NA	4.1	
2WD51E4AA			460				3.8	12.1	L	79	NA	16.2	
2WD51E5AA			575				3.1	9.9	L	78	NA	26.5	

For 3" discharge order an A1-3 KIT discharge flange

Standard parts

Ball bearing	Upper	Single row ball – SKF™ 6203-2Z
	Lower	Single row ball – SKF 6203-2Z
Mechanical seals – standard	Upper	Carbon/Ceramic, Type 16
	Lower	Silicon carbon/Silicon carbon, Type 16
O-ring – stuffing box		BUNA-N, AS 568A-163
O-ring – motor cover		BUNA-N, AS 568A-166

Application data

Maximum solid size	2"
Minimum casing thickness	5/16"
Casing corrosion allowance	1/8"
Maximum working pressure	22 PSI
Maximum submergence	50 feet
Minimum submergence	Fully submerged for continuous operation
	6" below top of motor for intermittent operation
Maximum environmental temperature	40°C (104°F) continuous operation
	60°C (140°F) intermittent operation

Construction details

Power cable – type	16/3, type SJTOW: single-phase, 1/2 HP
	14/3, type STOW: single-phase, 3/4 and 1 HP
	14/4, type STOW: all three-phase
Sensor cable – type	16/2, type SJTOW: seal sensor only
	18/4, type SJTOW: optional seal/heat sensor
Motor cover	Gray cast iron – ASTM A48 Class 30
Bearing housing	Gray cast iron – ASTM A48 Class 30
Seal housing	Gray cast iron – ASTM A48 Class 30
Casing	Gray cast iron – ASTM A48 Class 30
Impeller	Gray cast iron – ASTM A48 or cast bronze – ASTM B584 C87600
Motor shaft	AISI 300 Series stainless steel
Motor design	NEMA 48 frame, oil filled with Class F insulation
Motor overload protection	Single-phase: on winding thermal overload protection
	Three-phase: require ambient compensated Class 10, quick trip overloads in the control panel
Motor seal fail (moisture) detection	Seal fail sensor in an oil-filled seal chamber. Connect to an optional relay in control panel.
Optional motor thermal protection	Normally closed on-winding thermostats open at 275°F (135°C) and close at 112°F (78°C). Require terminal connection in the control panel.
External hardware	300 Series stainless steel
Impeller type	Semi-opened with pump out vanes on back shroud – 1750 RPM
	Enclosed with pump out vanes on back shroud – 3500 RPM
Oil capacity – seal chamber	10 ounces
Oil capacity – motor chamber	4.0 quarts

Dimensions

(All dimensions are in inches. Do not use for construction purposes.)

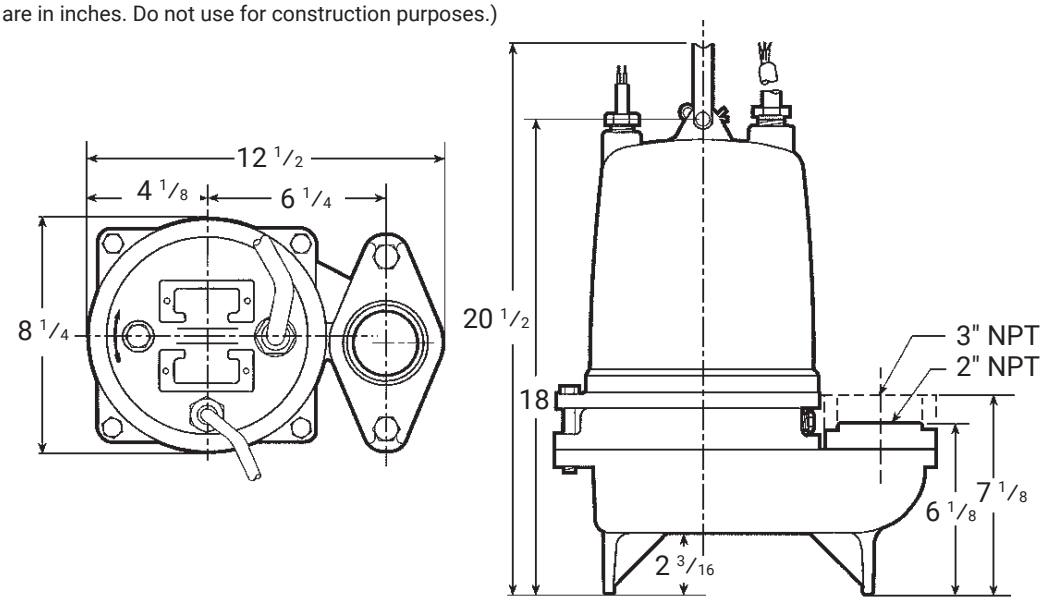

Nomenclature description

1st character – Discharge size

2 = 2” discharge with a bolt-on 2” N.P.T. threaded flange (For 3” discharge order an A1-3 KIT discharge flange)

2nd and 3rd characters – Series/solids size

WD = Wastewater, 2" solids handling, dual seal with seal fail probe in pump

4th character – Mechanical seals

5 = Silicon carbide/silicon carbide/BUNA – lower seal and carbon/ceramic/BUNA – upper seal (standard)

5th character – Cycle/RPM

1 = 60 Hz/3500 RPM

2 = 60 Hz/1750 RPM

6th character – Horsepower

B = 1/3 HP D = 3/4 HP

C = 1/2 HP E = 1 HP

7th character – Phase/voltage/enclosure

0 = Single-phase, 115 V 4 = Three-phase, 460 V

1 = Single-phase, 230 V 5 = Three-phase, 575 V

2 = Three-phase, 200 V 8 = Single-phase, 208 V

3 = Three-phase, 230 V

8th character – Impeller diameter

A = 3.75", 1 HP, 3500 RPM E = 4.69", 1/3 HP, 1750 RPM

B = 5.75", 1 HP, 1750 RPM H = 3.44", 3/4 HP, 3500 RPM

C = 5.38", 3/4 HP, 1750 RPM J = 3.19", 1/2 HP, 3500 RPM

D = 5.00", 1/2 HP, 1750 RPM K = 2.94", 1/3 HP, 3500 RPM

9th character – Cord length (power and sensor)

A = 20' (standard) F = 50'

D = 30' J = 100'

10th character – Options

B = Bronze impeller E = Epoxy paint

F = Both epoxy paint and bronze impeller

Last character – Option

H = Pilot duty thermal sensors **(three-phase only)**

Materials of construction

Item no.	Part name			Material		
				Standard		Optional
1	Impeller			1003		1179
2	Motor cover			1003		-
3	Shaft			300 Series SS		-
4	Fasteners			300 Series SS		-
5	Ball bearings			Steel		-
6	Power cable			STOW, 20 feet		Additional lengths
	Seal sensor cable					-
7	O-ring			BUNA-N		-
8	**Outer mech. seal**	**Service**	**Rotary**	**Stationary**	**Elastomers**	**Metal parts**
	STD	Mild abrasives	Silicon carbide		BUNA-N	300 Series SS

Material code	Engineering standard
1003	Cast iron — ASTM A48 Class 30
1179	Silicon bronze — ASTM C87600

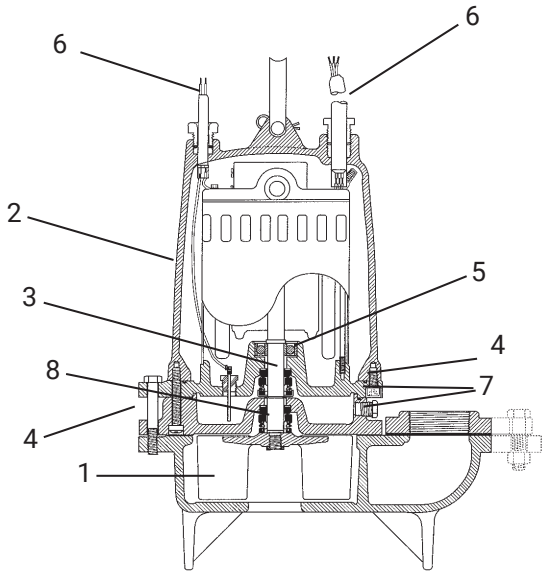

Standard panel options

Pump order number	Boulay series		Disconnect style	
	Simplex	Duplex	Simplex	Duplex
2WD52B0EA	S10020H	D10020J	CSD11016H	CDD11016J
2WD52B8EA	S10020H	D10020J	CSD16310H	CDD16310J
2WD52B1EA	S10020H	D10020J	CSD14063H	CDD14063J
2WD52C0DA	S10020H	D10020J	CSD11016H	CDD11016J
2WD52C8DA	S10020H	D10020J	CSD16310H	CDD16310J
2WD52C1DA	S10020H	D10020J	CSD16310H	CDD16310J
2WD52C2DA	S32540H	D32540J	CSD32540H	CDD32540J
2WD52C3DA	S32540H	D32540J	CSD32540H	CDD32540J
2WD52C4DA	S31615H	D31615J	CSD31625H	CDD31625J
2WD52D8CA	S10020H	D10020J	CSD11016H	CDD11016J
2WD52D1CA	S10020H	D10020J	CSD16310H	CDD16310J
2WD52D2CA	S34063H	D34063J	CSD14063H	CDD14063J
2WD52D3CA	S32540H	D32540J	CSD32540H	CDD32540J
2WD52D4CA	S31625H	D31625J	CSD31625H	CDD31625J
2WD52E8BA	S10020H	D10020J	CSD11016H	CDD11016J
2WD52E1BA	S10020H	D10020J	CSD11016H	CDD11016J
2WD52E2BA	S34063H	D34063J	CSD34063H	CDD34063J
2WD52E3BA	S34063H	D34063J	CSD34063H	CDD34063J
2WD52E4BA	S32540H	D32540J	CSD32540H	CDD32540J
2WD51B0KA	S10020H	D10020J	CSD11016H	CDD11016J
2WD51B8KA	S10020H	D10020J	CSD16310H	CDD16310J
2WD51B1KA	S10020H	D10020J	CSD16310H	CDD16310J
2WD51C0JA	S10020H	D10020J	CSD11016H	CDD11016J
2WD51C8JA	S10020H	D10020J	CSD16310H	CDD16310J
2WD51C1JA	S10020H	D10020J	CSD16310H	CDD16310J
2WD51C3JA	S32540H	D32540J	CSD32540H	CDD32540J
2WD51C4JA	S31625H	D31625J	CSD31625H	CDD31625J
2WD51C5JA	S31625H	D31625J	CSD31625H	CDD31625J
2WD51D8HA	S10020H	D10020J	CSD11016H	CDD11016J
2WD51D1HA	S10020H	D10020J	CSD11016H	CDD11016J
2WD51D3HA	S34063H	D34063J	CSD34063H	CDD34063J
2WD51D4HA	S32540H	D32540J	CSD32540H	CDD32540J
2WD51D5HA	S31625H	D31625J	CSD31625H	CDD31625J
2WD51E8AA	S10020H	D10020J	CSD11016H	CDD11016J
2WD51E1AA	S10020H	D10020J	CSD11016H	CDD11016J
2WD51E3AA	S36310H	D36310J	CSD36310H	CDD36310J
2WD51E4AA	S32540H	D32540J	CSD32540H	CDD32540J
2WD51E5AA	S32540H	D32540J	CSD32540H	CDD32540J

Notes:
- Panel part numbers above do not include float switches.
- Panel part numbers above include a seal fail circuit. If the 3-phase high temperature option is chosen for the pumps (H suffix), add an M suffix to the simplex part numbers above or an N suffix to the duplex models.
- All panel part numbers above have additional available features, see page 7 for more information.



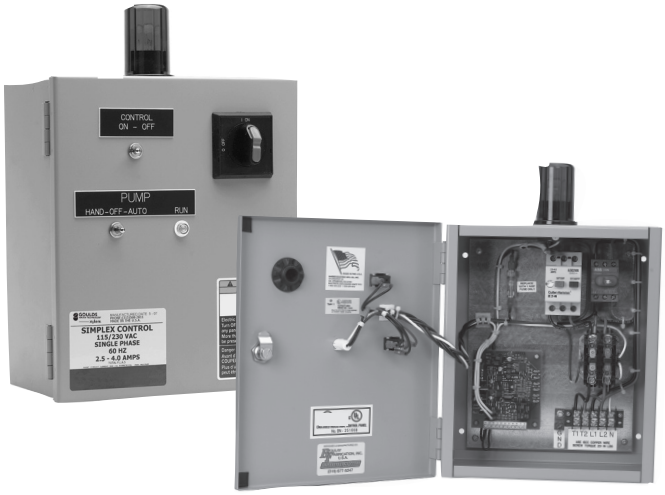

Boulay series

- NEMA 4X outdoor rated enclosure
- Red alarm beacon
- HOA selector switch
- Through door pump run light(s)
- Through door alarm test and horn silence button
- Single-phase models handle 120, 208 and 230V service
- Three-phase models handle 200, 230, 460 and 575V service
- Accepts single or dual power feed
- See brochure "BCP3" for additional information on simplex models
- See brochure "BCP4" for additional information on duplex models information

Disconnect style

- NEMA 4X outdoor rated enclosure
- Red alarm beacon
- Through door HOA selector switch
- Through door control on/off switch
- Through door main disconnect switch
- Single-phase models handle 120, 208 and 230V service
- Three-phase models handle 200, 230, 460 and 575V service
- Accepts single or dual power feed
- See brochure "BCPSDWWP" for additional information



Learn more about 2WD pumps:

Xylem Inc.
2881 East Bayard Street Ext.,
Suite A
Seneca Falls, NY 13148

Phone: (866) 325-4210
Fax: (888) 322-5877
xylem.com/goulds

Subject to change without notice. All information presented herein is believed reliable and in accordance with accepted engineering practices. Xylem makes no warranties as to the completeness of this information. Users are responsible for evaluating individual product suitability for specific applications. Xylem assumes no liability whatsoever for any special, indirect or consequential damages arising from the sale, resale or misuse of its products.

© 2024-2026 Xylem Inc. or its affiliate. All rights reserved. Xylem is a registered trademark of Xylem Inc. or one of its subsidiaries. Goulds is a registered trademark of ITT Manufacturing Enterprises LLC and is used under license. All other trademarks or registered trademarks are the property of their respective owners.

B2WD R7 6/2026

xylem
Let's Solve Water