xylem





AGS Series

Axial grinder pumps

Powerful performance for the modern wastewater stream

GOULDS WATER TECHNOLOGY
xylem

Advanced grinding power. Engineered for reliability.

Based on technology developed and tested in the toughest wastewater environments, count on AGS Series axial grinder pumps to handle the challenging demands of today's residential wastewater.

AGS Series grinder pumps feature a powerful axial grinder and semi-open impeller technology to easily slice through the solids, flushables and trash found in the modern wastewater stream without roping or clogging. This technology reduces waste to a fine slurry, resulting in minimal downtime and service issues. The AGS Series axial grinder pumps available through Goulds Water Technology offer proven solutions for a range of residential applications.

Applications

- 2" sewage pump replacement (.5 hp & 1 hp)
- Residential and small office new construction (wastewater)
- Areas where modern wastewater flushables are creating clogging issues



Advantages

Proven design: The axial grinder and semi-open impeller technology reduce downtime caused by clogging or roping.

Broad range of solutions: Available in single-phase 0.5 hp (115V or 230V), 1 hp (115V or 230V) and 2 hp (208-230V) options.

Trusted performance: Models deliver up to 120' TDH and flow rates of 53 gpm.

Ease of installation: Fixed balanced attachment to help simplify installation.

Built to last: Stainless steel (440C), cutter/plate style configuration and oil cooled motor. Cast iron impeller.

Continuous operation: Pump ratings are within the motor manufacturer's recommended working limits and can be operated continuously without damage when fully submerged. Single-phase, built-in, auto reset overload (Class F insulation) on all models.

Warranty: Three (3) years standard. Backed by Goulds Water Technology service and support. Four (4) years for GPDA members.

Built to perform

Features

A. Casing: One piece, uni-body cast iron, volute type for high efficiency.

B. Axial grinder: Stainless steel, eight (8) hole cutter plate, three (3) blade cutter generating up to 4.9 million bites per hour (up to 120‘ TDH).

C. Semi-open impeller: Powerful, non-clogging, cast iron design. Balanced for smooth operation.

D. Motor: Oil-cooled/fully submerged in high grade turbine oil for more efficient heat dissipation, permanent lubrication of bearings and mechanical seal, and protection against outside environment.

E. Motor shaft: AISI 300 series stainless steel.

F. Bearing housing/bearings: Upper and lower ball bearings for precision positioning of parts and to carry all radial and thrust loads.

G. Mechanical seal: Hardfaced silicon carbide on silicon carbide for longer life, stainless steel metal parts, BUNA-N elastomers (standard feature).

H. Power cord: Severe duty rated, oil and water resistant 20 foot cord. SJTOW power cord with NEMA three prong grounding plug. 2HP has 20‘ STOW bare leads.

I. Fixed balanced handle: For ease of installation.

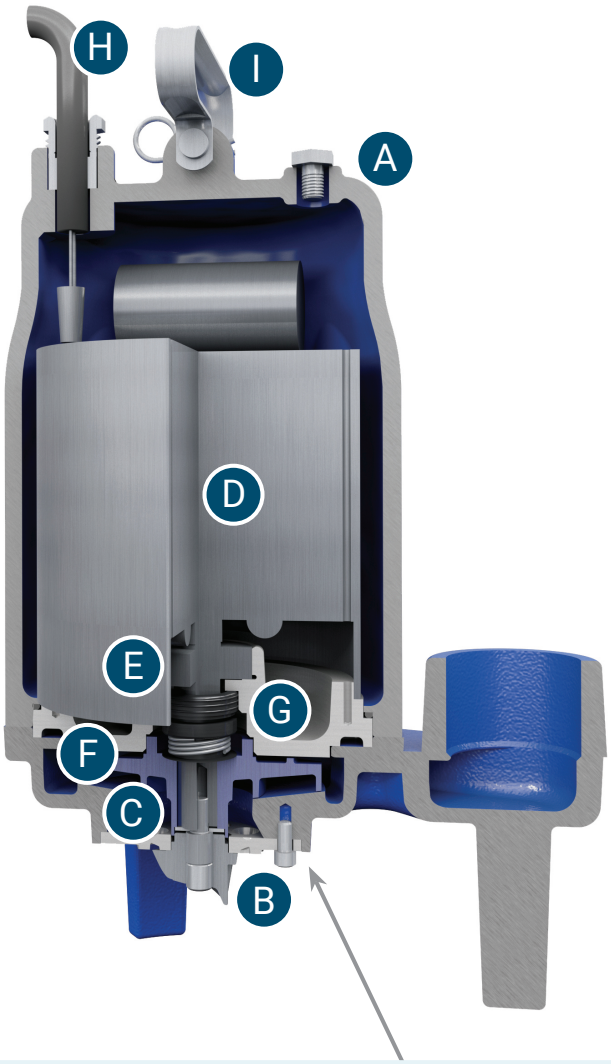

Axial grinder technology

Stainless steel, non-clogging design. Generates up to 4.9 million bites per hour (up to 120‘ TDH).

J. Eight (8) hole cutter plate.

K. Three (3) blade cutter with advanced design features to provide superior performance.



COMPLETE. RELIABLE. BLUE.
Learn more about our complete line of wastewater products.

Performance curve

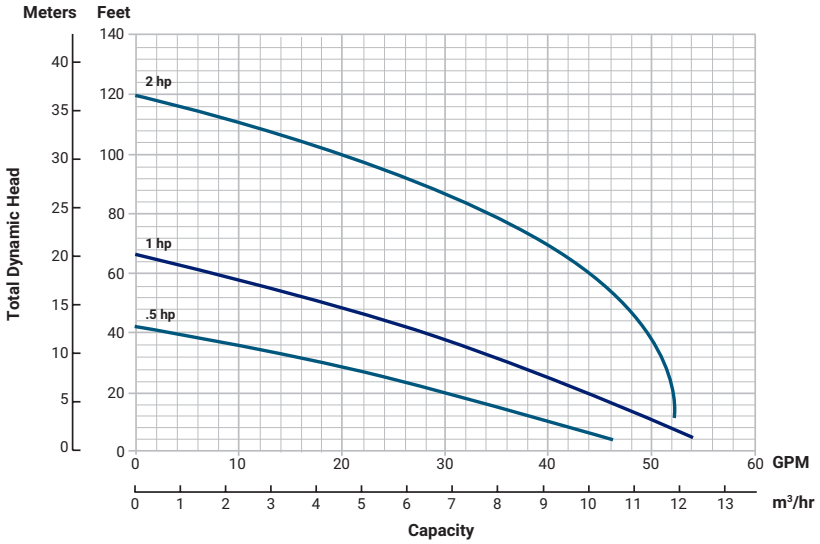

Specifications

	AGS0511	AGS0512	AGS1011	AGS1012	AGS2012
Voltage	115	230	115	230	208-230
Amps	9	4.5	11	5.5	15
HP	0.5		1		2
Capacity	46 gpm		53 gpm		52 gpm
Head	42 feet, TDH		66 feet, TDH		120 feet, TDH
Grinder	Axial, stainless steel (440C)				
Cutter plate	8 Hole, 3 Blade, stainless steel (440C) (cutter)				
Bites per hour	4.9 million				
Impeller	Semi-open, cast iron				
Phase	Single				
Speed	3500 rpm				
Discharge	2"				1 ¼"
Motor	Oil cooled, CSCR				
Casing	Uni body, class 30 cast iron				
Shaft	Stainless steel, 300 series ss				
Bearings	Upper/lower sealed ball bearings				
Hz	60				
Seal	Hardfaced silicon carbide on silicon carbide				
20' Cord	SJTOW with NEMA plug				STOW with bare leads
Insulation	Class F				
Weight	65 lbs/29.5 kgs				96 lbs/43.5 kgs
Warranty	Three (3) year standard/Four (4) year GPDA				

Dimensional drawings

All dimensions are in inches. Do not use for construction purposes.

AGS 0511, 0512, 1011 & 1012:

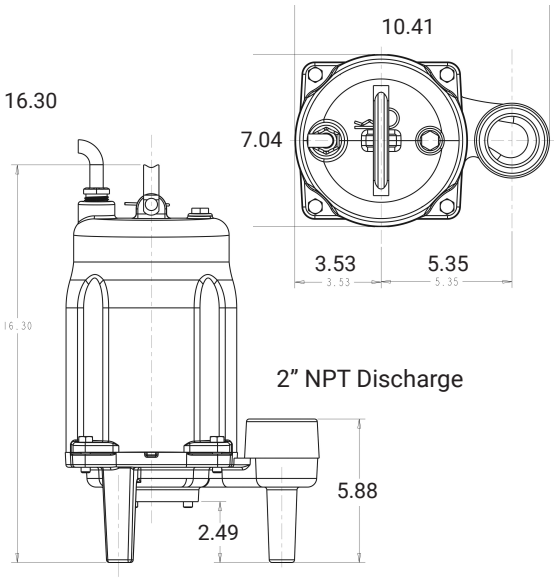

AGS 2012:

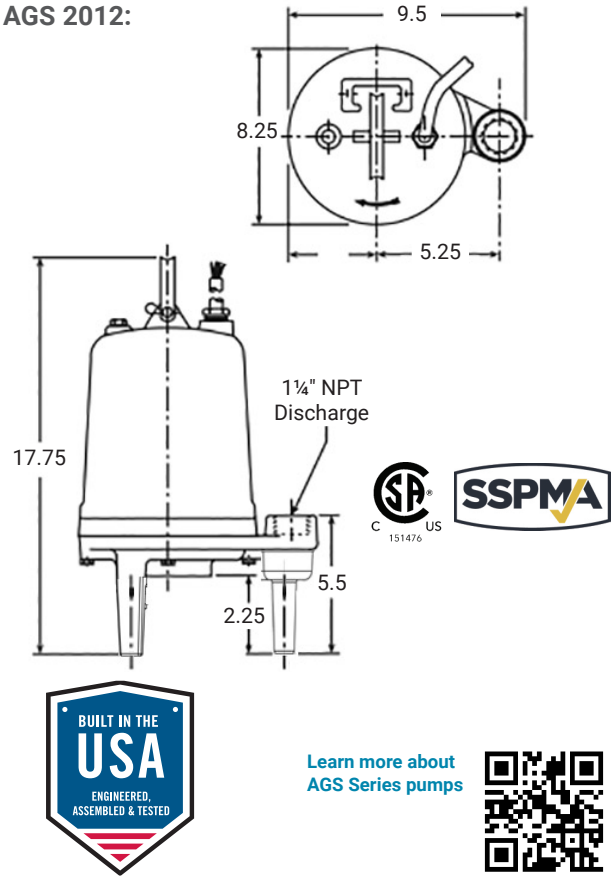

BUILT IN THE USA ENGINEERED, ASSEMBLED & TESTED

Learn more about AGS Series pumps

Subject to change without notice. All information presented herein is believed reliable and in accordance with accepted engineering practices. Xylem makes no warranties as to the completeness of this information. Users are responsible for evaluating individual product suitability for specific applications. Xylem assumes no liability whatsoever for any special, indirect or consequential damages arising from the sale, resale or misuse of its products.

© 2025 Xylem is a registered trademark of Xylem Inc. or one of its subsidiaries. Goulds is a registered trademark of ITT Manufacturing Enterprises LLC and is used under license. All other trademarks or registered trademarks are the property of their respective owners.

BRAGSSERIES R9 12/2025

xylem Let's Solve Water