Operating Manual

IQ SENSOR NET
MIQ/MC(-A)-PR

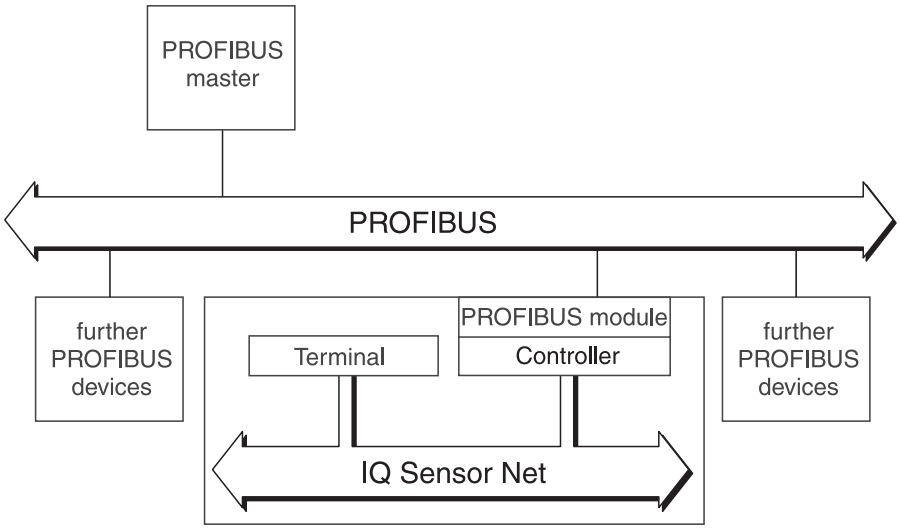

PROFIBUS connection
for the IQ SENSOR NET System 2020

ba64119e06 02/2006

Accuracy when going to press

The use of advanced technology and the high quality standard of our instruments are the result of continuous development. Consequently, this may result in some differences between this operating manual and your instrument. Also, we cannot guarantee that there are absolutely no errors in this manual. Therefore, we are sure you will understand that we cannot accept any legal claims resulting from the data, figures or descriptions.



Note
The latest version of the present operating manual can be found on the Internet under www.WTW.com.

Copyright

© Weilheim 2006, WTW GmbH
Reprinting - even as excerpts - is only allowed with the explicit written authorization of WTW GmbH, Weilheim.
Printed in Germany.

System 2020 XT - Contents

1 Overview 5
1.1 How to use this component operating manual 5
1.2 PROFIBUS and IQ SENSOR NET system 2020 6

2 Safety instructions 7

3 Interface for the PROFIBUS 8
3.1 Scope of delivery 8
3.2 The PROFIBUS module 9
3.2.1 Terminal connections 10
3.2.2 Connecting the PROFIBUS cable 11
3.2.3 Rotary address switches 15
3.2.4 PROFIBUS and module monitoring 16
3.3 GSD file 17
3.4 Commissioning 18
3.5 PROFIBUS checklist 19
3.6 Sensor administration under PROFIBUS 20
3.6.1 Creating the assignment of sensor numbers . . 20
3.6.2 Creating the identical assignment of sensor numbers in several systems 21
3.6.3 Changing the assignment of sensor numbers . . 21

4 Data transmission 22
4.1 Overview 22
4.2 Course of the data transmission 22
4.3 Output data 24
4.4 Input data 24
4.5 Data formats 25

5 What to do if 27
5.1 Fault diagnosis 27
5.2 Error elimination 27

6 Technical data 28
6.1 IQ SENSOR NET MIQ/MC(-A)-PR component 28
6.2 PROFIBUS module 28

1 Overview

1.1 How to use this component operating manual

The present operating manual complements the system operating manual for the IQ SENSOR NET 2020 system. It contains the description of the PR option of the MIQ/MC(-A)-PR controller.

File this operating manual directly behind the system operating manual.

Structure of the IQ SENSOR NET operating manual

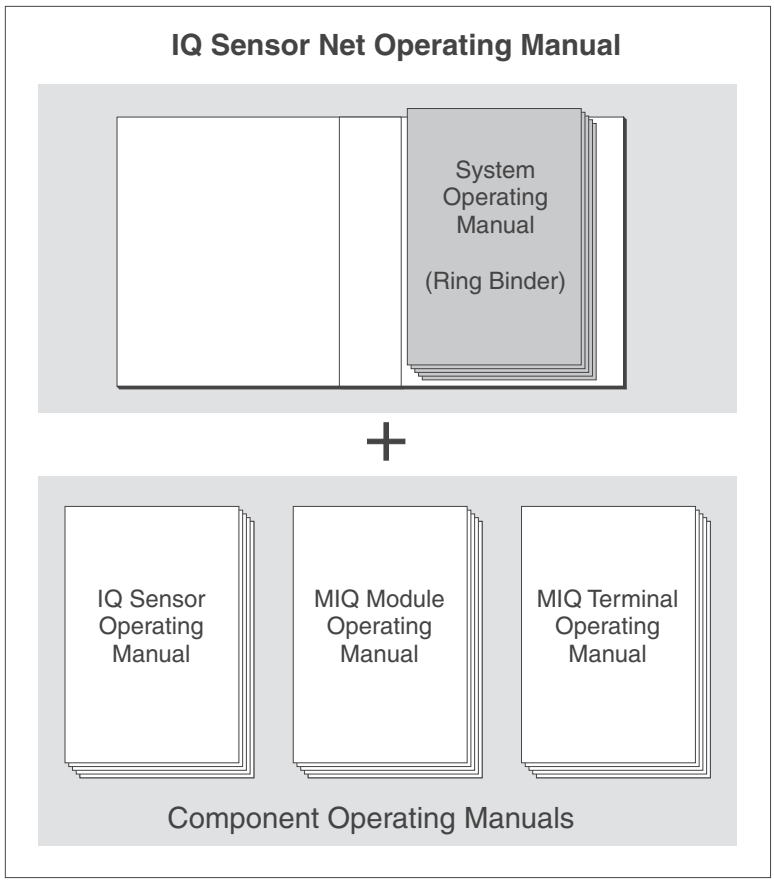

Fig. 1-1 Structure of the IQ SENSOR NET operating manual

The IQ SENSOR NET operating manual has a modular structure like the IQ SENSOR NET system itself. It consists of the system operating manual and the operating manuals of all the components used.

The space in the ring binder behind the system operating manual is intended for filing the component operating manuals. Please file all component operating manuals here so that all information is quickly available in one location.

1.2 PROFIBUS and IQ SENSOR NET system 2020

System communication

The functional units of the IQ SENSOR NET are connected with one another via a common line (Fig. 1-2). The line consists of two wires and a shield. It transports digital information between the controller and the other modules. At the same time, the line is used to supply all modules with electrical voltage from a power supply unit. The power supply unit is only required for the power supply and is not used in the system communication.

The -PR option of the MIQ/MC(-A)-PR controller expands the system communication by an interface to the PROFIBUS master. Sensor data are sent to the PROFIBUS master via this interface.

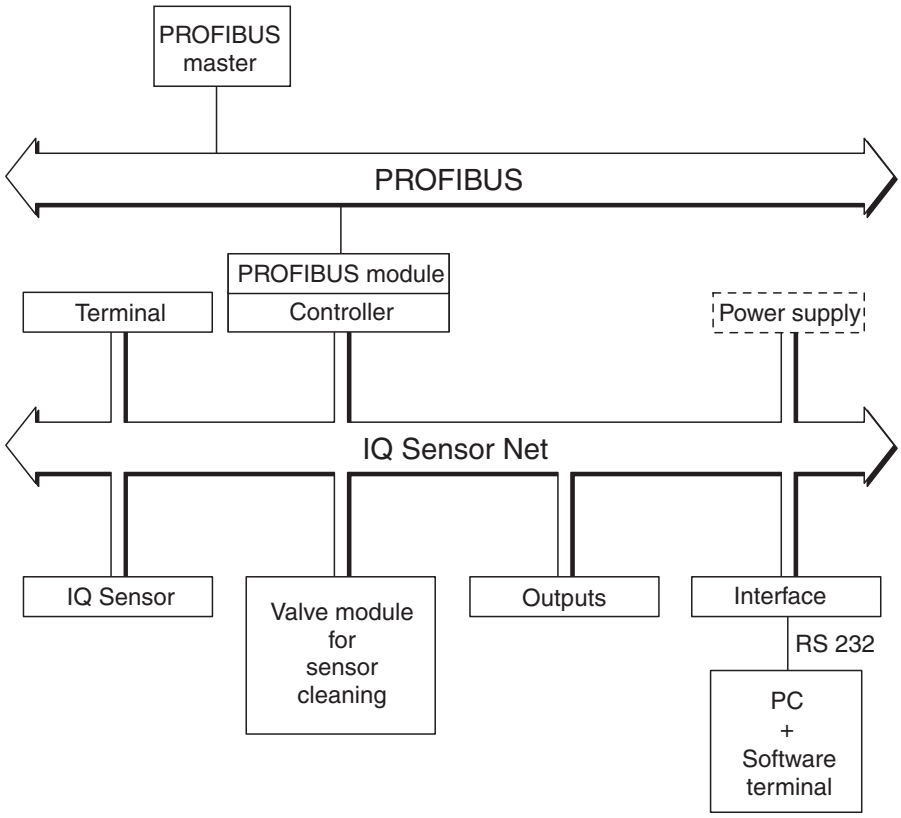

Fig. 1-2 Functional units of the IQ SENSOR NET with connection to the PROFIBUS

Note
All other general information on components, functions and operation of the IQ SENSOR NET 2020 system is given in the system operating manual.

2 Safety instructions

Essential instructions that must be followed during the commissioning, operation and maintenance of the IQ SENSOR NET system are given in the system operating manual. It is essential for the operator to read this system operating manual before carrying out any work with the system.

Notes in this operating manual



Note
indicates notes that draw your attention to special features.



Note
indicates cross-references to other documents, e.g. component operating manuals.

3 Interface for the PROFIBUS

The PROFIBUS module in the MIQ/MC(-A)-PR controller enables to connect the IQ SENSOR NET together with all connected sensors to the digital connection of a higher process control system.

The connection to the PROFIBUS DP is supported in the MIQ/MC(-A)-PR controller. To do so, the *AnyBus-S module for PROFIBUS DP* of the HMS INDUSTRIAL NETWORKS AB company is used.

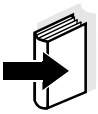

Note
Further instructions for the installation and operation of a PROFIBUS network is given on the Internet under www.profibus.com and www.hms-networks.com.

3.1 Scope of delivery

In addition to the scope of delivery of the MIQ/MC(-A), the scope of delivery of the MIQ/MC(-A)-PR module contains:

- PROFIBUS module, *AnyBus-S module for PROFIBUS-DP*, mounted in the MIQ/MC(-A)-PR controller
- Screw for shielding terminal
- 2 x washer for shielding terminal
- Insulating part of the shielding terminal
- Operating manual for the PROFIBUS module
- CD-ROM containing GSD file

3.2 The PROFIBUS module

The PROFIBUS module (*AnyBus-S module for PROFIBUS-DP)* is mounted on the main circuit board of the MIQ/MC(-A)-PR controller.

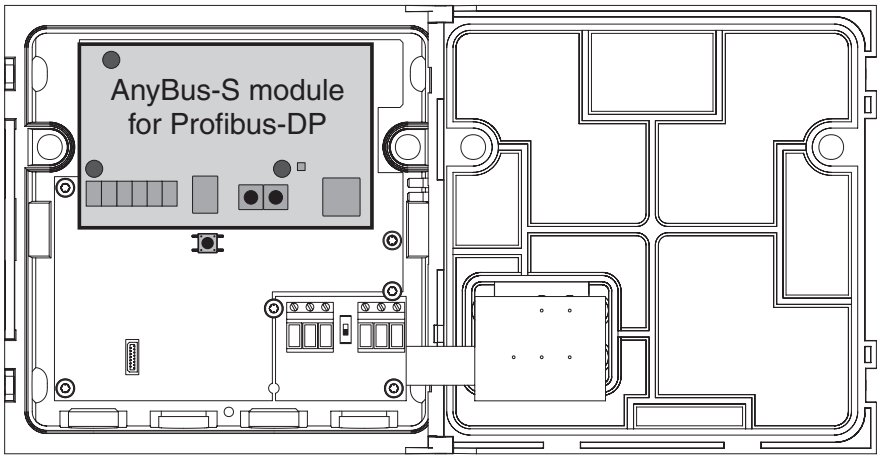

Fig. 3-1 AnyBus-S module for PROFIBUS-DP in the MIQ/MC(-A)-PR

The *AnyBus-S module for PROFIBUS DP* provides an interface to which a PROFIBUS master has read and write access. The PROFIBUS module supplies the PROFIBUS master with data.

PROFIBUS module

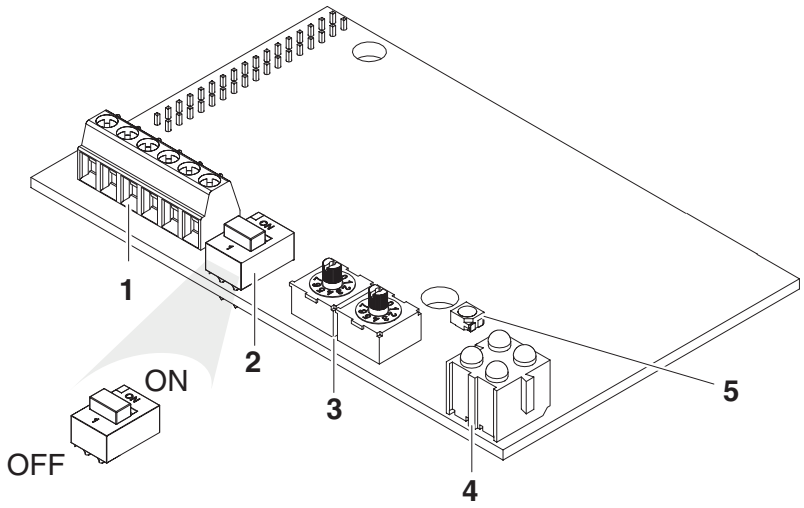

Fig. 3-2 Elements of the AnyBus-S module for PROFIBUS-DP

1	PROFIBUS DP terminal strip
2	PROFIBUS terminator switch
3	Rotary address switches
4	LEDs for PROFIBUS diagnosis
5	LED for module diagnosis

3.2.1 Terminal connections

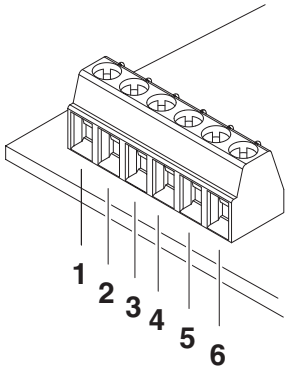

Fig. 3-3 Terminal connections

Pin	Name	Function
1	+5 V BUS	Insulated +5 V from RS 485
2	GND BUS	Insulated GND from RS 485
3	A line	Negative RxD/TxD according to RS 485 specification
4	B line	Positive RxD/TxD according to RS 485 specification
5	Shield	BUS cable screen, connected with PE
6	RTS	Request To Send

To check the wiring, the connection designations of a 9-pole D-SUB plug connection are given here:

Pin	Color*	Name	Function
1			-
2			-
3	Red	B line	Positive RxD/TxD according to RS 485 specification
4		RTS	Request To Send
5		GND BUS	Reference potential for data wires and terminating resistors
6		+5 V BUS	Supply voltage for terminating resistors
7			-
8	Green	A line	Negative RxD/TxD according to RS 485 specification
9			-

* Wire colors when using a standard PROFIBUS cable.

3.2.2 Connecting the PROFIBUS cable

The MIQ/MC(-A)-PR component can be connected at the end of the PROFIBUS (A) or by looping through (B).

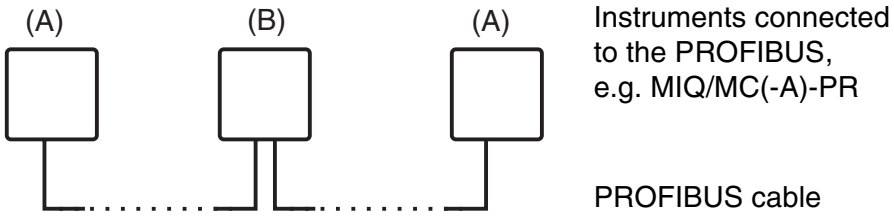

Fig. 3-4 Options of connecting the MIQ/MC(-A)-PR to the PROFIBUS cable (A) at the end or (B) by looping through

(A) Connecting the MIQ/MC(-A)-PR component to the PROFIBUS end

1	Carefully strip the PROFIBUS cable insulation for approx. 20 mm.
2	Bare the PROFIBUS wires from the shielding braid and strip them for approx. 5 mm.
3	Twist the shielding braid and cover it with approx. 15 mm insulating tube.
4	Insert the PROFIBUS cable into the module housing of the MIQ/MC(-A)-PR through the screwed cable gland.
5	Additionally insulate the transition between cable sheath and insulating tube of the shielding braid (e.g. with insulating tape or shrinkable tubing), so that no shielding braid is uncovered.

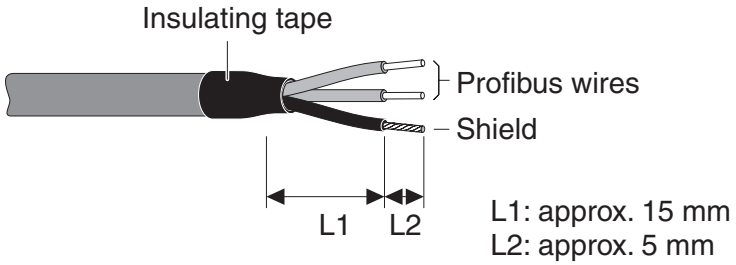

Fig. 3-5 PROFIBUS cable with insulating tape

6	Connect the PROFIBUS wires and shield to the terminal connections of the PROFIBUS module (connections *ALine*, *BLine* and *Shield*, see section 3.2.1).

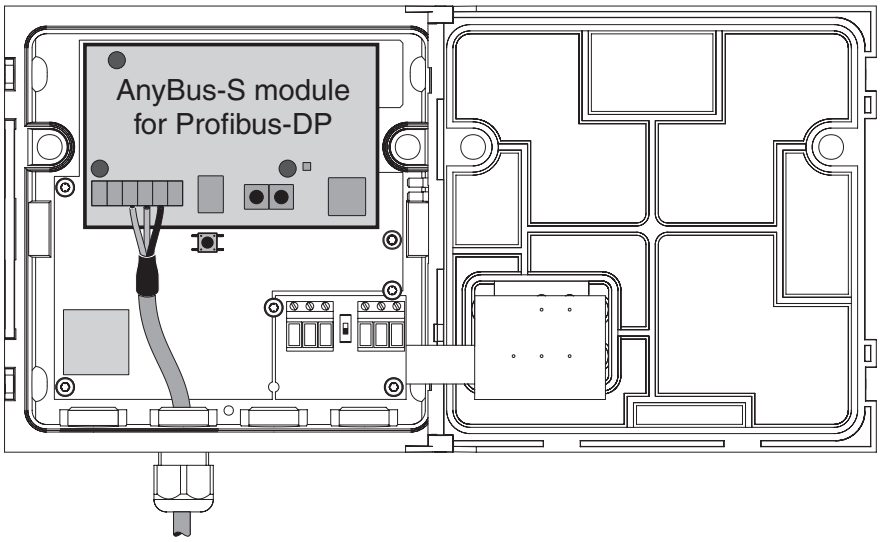

Fig. 3-6 Connection of the MIQ/MC(-A)-PR as the PROFIBUS termination

7	Fasten the cap nut of the screwed cable gland.
8	Check and if necessary correct the position of the PROFIBUS terminator switch. The switch must be in the ON position.
9	Perform the check: ● Check whether the wires and cables are screwed on tightly. ● Insulate open wires. ● Remove cable rests from the MIQ/MC(-A)-PR module.
10	Close the MIQ/MC(-A)-PR module.

Note
Using a shielding terminal, connect the shield of the PROFIBUS cable to the potential equalization or grounding system of the plant in the vicinity but outside of the MIQ module housing.

(B) Connecting the MIQ/MC(-A)-PR component to the PROFIBUS by looping through

For looping through the PROFIBUS cable via the MIQ/MC(-A)-PR component, a shielding terminal is contained in the scope of delivery.

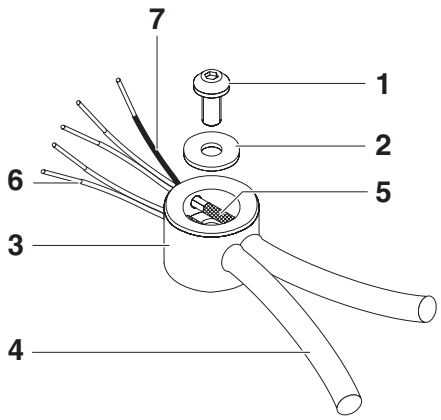

Fig. 3-7 Shielding terminal with PROFIBUS cable and shield connection cable

1	Screw
2	Washer
3	Insulating part of the shielding terminal
4	Cable insulation of the PROFIBUS cable
5	Shielding braid of the PROFIBUS cable
6	Wires of the PROFIBUS cable
7	Shield connection wire

1	Carefully strip the cable insulation of both PROFIBUS cables for approx. 35 mm.
2	Shorten the exposed shielding braid to approx. 15 mm.
3	Bare the PROFIBUS wires for approx. 5 mm.
4	Insert both PROFIBUS cables in the module housing of the MIQ/MC(-A)-PR through the free cable glands.
5	Create a shield connection wire (7). To do so, strip a wire on both ends for approx. 5 mm and 10 mm.
6	Insert a washer in the insulating part (3) of the shielding terminal.
7	Feed both PROFIBUS cables into the insulating part (3) and lead them through the insulating part.
8	Feed the long stripped end of the shield connection wire (7) into the insulating part (3) of the shielding terminal.

9	Position the second washer and screw it tight.

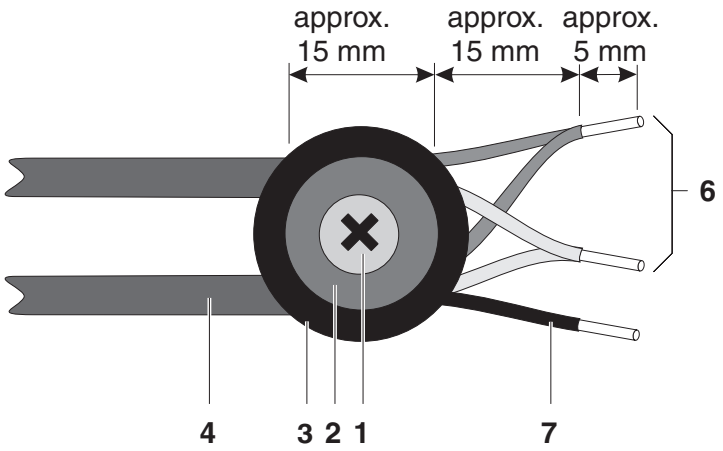

Fig. 3-8 Shielding terminal with PROFIBUS cable (view from above)

10	Shorten the wires of the shielding braid if they protrude over the shielding terminal.
11	Put the PROFIBUS wires together in pairs.
12	Connect the PROFIBUS wires and shield to the terminal connections of the PROFIBUS module (connections *A Line*, *BLine* and *Shield*, see section 3.2.1).

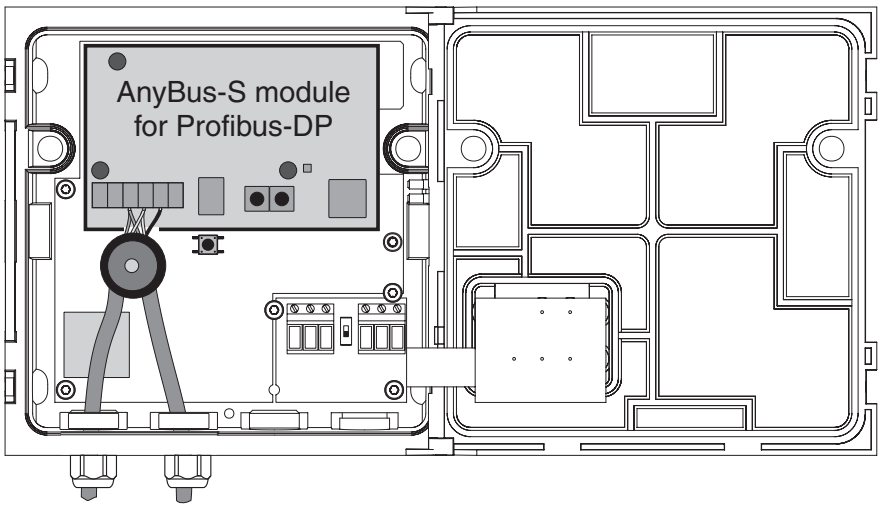

Fig. 3-9 Looping through of the PROFIBUS cable via a MIQ/MC(-A)-PR

13	Fasten the cap nut of the screwed cable gland.

14	Check and if necessary correct the position of the PROFIBUS terminator switch. The switch must be in the OFF position.
15	Perform the check: ● Check whether the wires and cables are screwed on tightly. ● Insulate open wires. ● Remove cable rests from the MIQ/MC(-A)-PR module.
16	Close the MIQ/MC(-A)-PR module.

Note
Using a shielding terminal, connect the shield of the PROFIBUS cable to the potential equalization or grounding system of the plant in the vicinity but outside of the MIQ module housing.

3.2.3 Rotary address switches

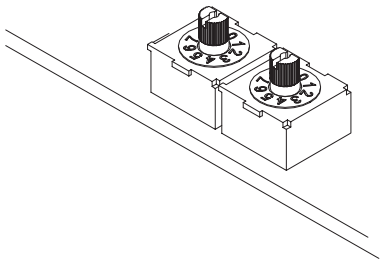

Fig. 3-10 Rotary address switches

A prerequisite for the configuration of the *AnyBus-S module for PROFIBUS DP* is the setting of its address. The address is set using two rotary switches. The left-hand switch is used to set the tens digit, whereas the right switch is used to set the ones digit of the address. This enables addresses of 1-99 to be set.

Example To set an address of 64:
Turn the left-hand switch to 6,
turn the right-hand switch to 4.

Note
The address cannot be changed during operation. A change of the address becomes only effective after the address setting was changed and the system was reset (see system-operating manual).

3.2.4 PROFIBUS and module monitoring

The PROFIBUS module has 4 LEDs for monitoring the bus and one LED for monitoring the PROFIBUS module. These 5 LEDs are important aids for the monitoring and diagnosis of faults.

Bus monitoring

The LEDs have the following meaning:

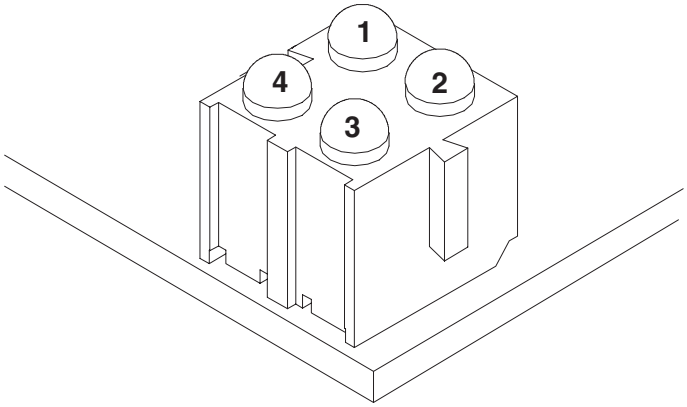

Fig. 3-11 LEDs for bus monitoring

LED	Color	Meaning
1	-	Not used
2	Green	The module is online (recognized by the PROFIBUS master), data exchange is possible. **Off** - The module is not online
3	Red	The module is offline, data exchange is not possible. **Off** - The module is not offline
4	Flashes red at a freq. of:	**1 Hz** - error in the configuration: During the initialization of the module, IN and/or OUT data word length does not correspond to the data word length in the configuration of the PROFIBUS master (GSD file). **2 Hz** - error in the user settings: During the initialization of the module, the data word length/content setting in the user settings does not correspond to the data word length/ content setting in the configuration of the PROFIBUS master (GSD file). **4 Hz** - error during the initialization of the ASIC for PROFIBUS communication. **Off** - No error diagnostics available.

Module monitoring

A two-color LED (for position of the LED, see section 3.2) is used for monitoring the PROFIBUS module.

Monitoring function	Color	Flashing frequency
ASIC and FLASH ROM error	Red	2 Hz
Module not initialized	Green	2 Hz
Module initialized and in operation	Green	1 Hz
RAM error	Red	1 Hz
DPRAM error	Red	4 Hz

3.3 GSD file

The GSD file contains all necessary information on the PROFIBUS module and is required by the configuration program of the PROFIBUS master.

The GSD file for the IQ SENSOR NET is found on the CD-ROM provided (file name: IQMC06D1.GSD). The current GSD file is also provided on the Internet under www.WTW.com.

3.4 Commissioning

To connect the IQ SENSOR NET to the PROFIBUS, preparations are required on the PROFIBUS module, on the PROFIBUS master and, if necessary, also on the IQ SENSOR NET.

Preparing the PROFIBUS module

1	Open the MIQ/MC (-A)-PR module (see System operating manual).
2	Set up the address on the PROFIBUS module using the two rotary address switches (see section 3.2.3).
3	Connect the cable to the PROFIBUS on the terminals of the PROFIBUS module (see section 3.2.1).
4	Set up the Profibus terminator switch on the Profibus module according to the Profibus installation regulations.

Configuring the PROFIBUS master

5	To configure the Profibus master, use the GSD file for MIQ/MC (-A)-PR from the CD-ROM.

Preparing the IQ SENSOR NET

Preparations on the IQ SENSOR NET may be necessary if the system is to transmit the data of the sensors to the PROFIBUS with a specific assignment of the sensors to sensor numbers (S01 ... S20) (see section 3.6).



Note
The sensor numbers are automatically assigned by the IQ SENSOR NET in the order in which sensors are recognized by the system. The current assignment of sensor numbers to the sensors can be seen in the *List of sensors* (see System operating manual, chapter *List of sensors*).

3.5 PROFIBUS checklist

The following checklist supports you when planning, projecting and installing a PROFIBUS plant with the IQ SENSOR NET. For smooth operation, you should be able to answer all questions with "Yes".

- Is the [bus system] (bus segment) installed without branch lines?
- Was the correct PROFIBUS cable used (cord type A according to EN 50170)?
- Are the poles of the signal lines A line and B line correctly connected at all bus connections?
- Is it guaranteed that there is no short-circuit between A line, B line and cable shielding?
- Is the shielding installed free of interruptions?
- Are the guidelines for shielding and grounding being observed, and doesn't any unallowed potential equalization current flow via the shielding?
- Is the maximum cable length (per bus segment) observed for the corresponding baud rate?
- Do all devices support the required baud rate?
- With 12 Mbit/s transmission rate only: Are the bus plugs suitable for this baud rate?
- Are exactly two terminators switched on at the ends of the [bus system] (bus segment)?
- Are the terminators supplied with voltage so the following applies: $U_{B\ line} - U_{A\ line} > + 500$ mV?
- Do all devices have individual bus addresses?
- After changing the bus address, have the devices been restarted (switched off and on again)?
- Do the addresses projected in the master correspond to the actual addresses? Are all addresses less than or equal to the parameter HSA and less than 126 (HSA = Highest Station Address)?
- Is the currently valid GSD being used? If you are in doubt, download it from the Internet.
- Have admissible bus parameters been set only? If you are in doubt set them to default values.

- Is it guaranteed that the PROFIBUS master has consistent access to the 16 byte sensor data structure?

  Note for Siemens PLC with programming language STEP7:
  The following commands have to be used for consistent access:

  – SFC15 (for writing)

  – SFC14 (for reading)

- After commissioning:
  Do all devices signal error-free behavior?

3.6 Sensor administration under PROFIBUS

Preparation of the IQ SENSOR NET for communication with the PROFIBUS may require, e.g. the following:

- Creating a IQ SENSOR NET system with specific assignment of sensor numbers to sensors (see section 3.6.1)
- Creating several IQ SENSOR NET systems with the identical assignment of sensor numbers to sensors (see section 3.6.2)
- Changing the order of the sensors in an already installed system (see section 3.6.3)

3.6.1 Creating the assignment of sensor numbers

You want to install a IQ SENSOR NET system and, at the same time, to create a specific sequence of sensor number assignments to the sensors.

1	Carry out a system start without any sensors (see System operating manual, chapter Installation).
2	Connect the sensors to the system in the required order. For each sensor, wait until the sensor is recognized by the system (see System operating manual, chapter Installation).

3.6.2 Creating the identical assignment of sensor numbers in several systems

You want to install several identical IQ SENSOR NET systems and, at the same time, to create the same sequence of sensor number assignments to the sensors in all systems.

1	Carry out a system start without any sensors (see System operating manual, chapter Installation).
2	Connect the sensors to the system in the required order. For each sensor, wait until the sensor is recognized by the system (see System operating manual, chapter Installation).
3	Repeat steps 1 and 2 for all other systems and, while doing so, keep to exactly the same order when connecting the sensors.

3.6.3 Changing the assignment of sensor numbers

You want to change the assignment of sensor numbers to the sensors in an already running IQ SENSOR NET system.

1	Unplug all sensors from the IQ SENSOR NET.
2	Delete all inactive datasets in the list of sensors (see System operating manual, chapter *Deleting inactive datasets of sensors*).
3	Connect the sensors to the system in the required order. For each sensor, wait until the sensor is recognized by the system (see System operating manual, chapter Installation).



Note
When the inactive datasets are deleted, all settings for the sensors are deleted as well.

4 Data transmission

4.1 Overview

Transmitted sensor data

The following data for a sensor is transmitted to the PROFIBUS master as a consistent data block:

- Sensor number (Sxx)
- Sensor status
- Sensor model
- Status info of sensors
- Measuring mode
- Measured value status (main and secondary measured value)
- Main measured value
- Secondary measured value

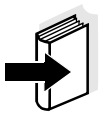

Note
The transmitted data of all IQ SENSOR NET sensors is given in the WTW document, "IQ SENSOR NET sensors: coded data for field bus communication" (ba75560de). It is permanently updated when new sensors are available and when the sensor software is modified (if the modifications are relevant for the transmitted sensor data). The latest version is available on the Internet, in the download area for operating manuals. Use the search function for the download and search for "ba75560de".

4.2 Course of the data transmission

The basis for data transmission between the PROFIBUS master and IQ SENSOR NET is formed by the unique assignment of a sensor to its sensor number (Sxx) in the IQ SENSOR NET system. The sensor numbers are assigned by the system in the order in which the sensors are recognized by the system.

The sensor number (Sxx) is the identification for a sensor. The sensor number is always transmitted in the first byte of the output and input data. Thus the PROFIBUS master can clearly query data of individual sensors.

The data is transmitted in two steps:

- The Profibus master transmits the request to the Profibus module to supply data for the sensor with a certain sensor number.
- The Profibus module checks whether the requested sensor number is present and returns the data for the sensor with the respective sensor number to the Profibus master.

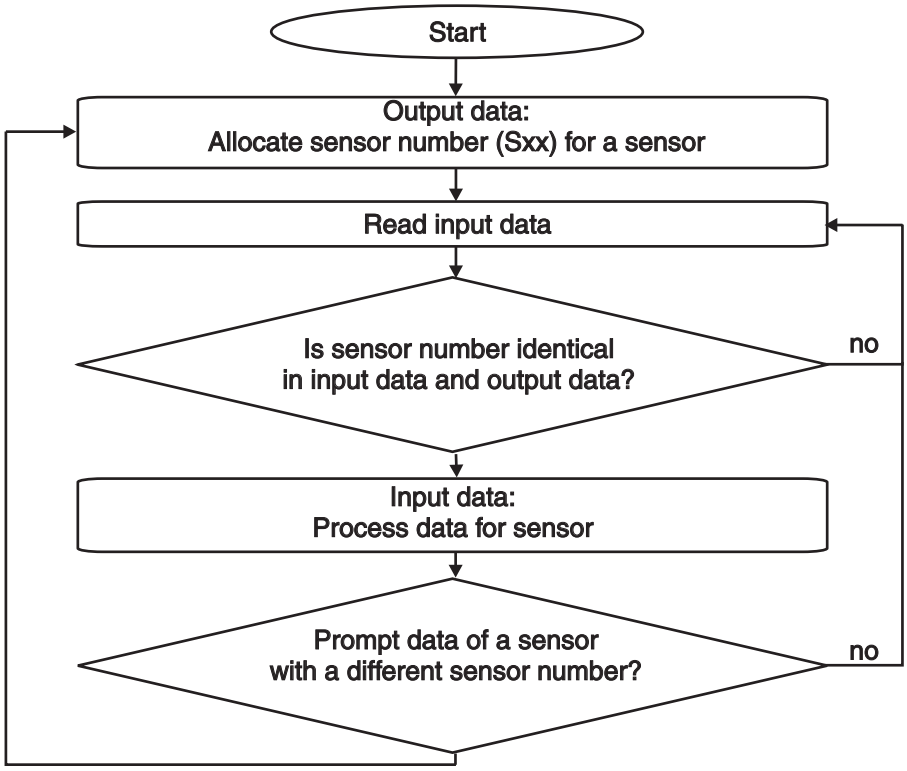

Fig. 4-1 Course of the data transmission in the PROFIBUS master

4.3 Output data

(1 byte - from the PROFIBUS master to the IQ SENSOR NET)

Address	Information	Bit
Offset 0h	Sensor number (Sxx) in the IQ SENSOR NET (Int8)	Bits 7-0

4.4 Input data

(16 bytes - from the IQ SENSOR NET to the PROFIBUS master)

Address	Information	Bit
Offset 0h	Sensor number (Sxx) (Int 8)	Bits 7-0
Offset 1h	Sensor status (Int8)	Bits 7-0
Offset 2h	Sensor model (Int16)	Bits 15-8
Offset 3h		Bits 7-0
Offset 4h	Status info (Int16)	Bits 15-8
Offset 5h		Bits 7-0
Offset 6h	Measuring mode (Int8)	Bits 7-0
Offset 7h	Measured value status (Int8) Main measured value bits 7-4 Secondary measured value bits 3-0	Bits 7-0
Offset 8h	Main measured value (IEEE-754 floating point, 32-bit)	Bits 31-24
Offset 9h		Bits 23-16
Offset Ah		Bits 15-8
Offset Bh		Bits 7-0
Offset Ch	Secondary measured value (IEEE-754 floating point, 32-bit)	Bits 31-24
Offset Dh		Bits 23-16
Offset Eh		Bits 15-8
Offset Fh		Bits 7-0

4.5 Data formats

Measured values

The data for the main and secondary measured values are transmitted in the IEE-754 standard 32-bit floating point format.

Address	Bit representation (MSB* … LSB*)
Offset 0h bits 31-24	S E E E E E E E
Offset 1h bits 23-16	E M M M M M M M
Offset 2h bits 15-8	M M M M M M M M
Offset 3h bits 7-0	M M M M M M M M

S = sign (bit 31)
E = exponent (bits 30-23)
M = mantissa (bits 22-0)

* MSB = Most significant bit, LSB = Least significant bit

If not all of the bits of the exponents are 0, the value is calculated according to:

$$V = -1^{S} \cdot 2^{E-127} \cdot (1 + M_{b22} \cdot 2^{-1} + M_{b21} \cdot 2^{-2} + M_{b20} \cdot 2^{-3} + ... + M_{b0} \cdot 2^{-23})$$

If all of the bits of the exponents are 0, the value is calculated according to:

$$V = -1^{S} \cdot 2^{-126} \cdot (M_{b22} \cdot 2^{-1} + M_{b21} \cdot 2^{-2} + M_{b20} \cdot 2^{-3} + ... + M_{b0} \cdot 2^{-23})$$

A value is 0 if all the bits of both the exponents as well as the mantissa are 0.

Note
If the measured value is equal to 0, check the measured value status. If the measured value status is not equal to 1, an error has occurred and the measured value is invalid.

Sensor model Status info

The data for the sensor model and status info is transmitted as INT16, i.e. consists of 2 bytes. The assignment is carried out in Motorola format (the higher value byte first).

Address	Bit representation (MSB … LSB)	Information
Offset 0h bits 15-8		High byte
Offset 1h bits 7-0		Low byte

Measured value status The data for the measured value status of the main and secondary measured values are encoded jointly into a single byte. Bits 7-4 encode the status of the main measured value, bits 3-0 encode the status of the secondary measured value.

Other data All other data always consist of only a single byte (Int8).

5 What to do if ...

5.1 Fault diagnosis

A simple diagnosis of the operability of the PROFIBUS module and communication with the PROFIBUS is possible via the LEDs on the PROFIBUS module in the MIQ/MC (-A)-PR (see section 3.2.4).

5.2 Error elimination

Data transmission between the Profibus master and IQ SENSOR NET system is faulty

Cause	Remedy
– Incorrect wiring of the connections on the terminal strip	– Check/change the connections (see section 3.2.1) – Use checklist according to section 3.5
– Incorrect setting of the address	– Check/change the setting of the address (see section 3.2.3)
– Incorrect protocol	– Check the version of the GSD file – Adapt the protocol
– Profibus module defective	– Send MIQ/MC(-A)-PR module to WTW

The PLC does not contain any plausible input data

Cause	Remedy
– Input data and output data are not consistent	– When programming the PLC, define input data and output data as consistent over the entire data length
– The data interpretation of the PLC is not correct	– Observe the data alignment of the PLC data representation. If necessary, exchange the high-order and low-order bytes word by word

6 Technical data

6.1 IQ SENSOR NET MIQ/MC(-A)-PR component

General technical data for the IQ SENSOR NET and the MIQ/MC component are given in the System operating manual for the 2020 system.

The following data that differ from these apply to the MIQ/MC(-A)-PR controller:

Electrical data

Power consumption

MIQ/MC with "PR" option	3 W

6.2 PROFIBUS module

Information on the technical data of the module *AnyBus-S module for Profibus DP* of the HMS INDUSTRIAL NETWORKS AB company is given in the documentation of the HMS INDUSTRIAL NETWORKS AB company.

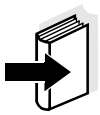

Note
Further information on the technical data of the Profibus module is given on the Internet under the address of the manufacturer

HMS INDUSTRIAL NETWORKS AB
(www.hms-networks.com)

in the following documents:

- FIELDBUS APPENDIX
  ANYBUS-S PROFIBUS DP
- AnyBus Slave Design Guide
  ANYBUS-S Parallel Interface