OPERATING MANUAL

ba75507d10 07/2022

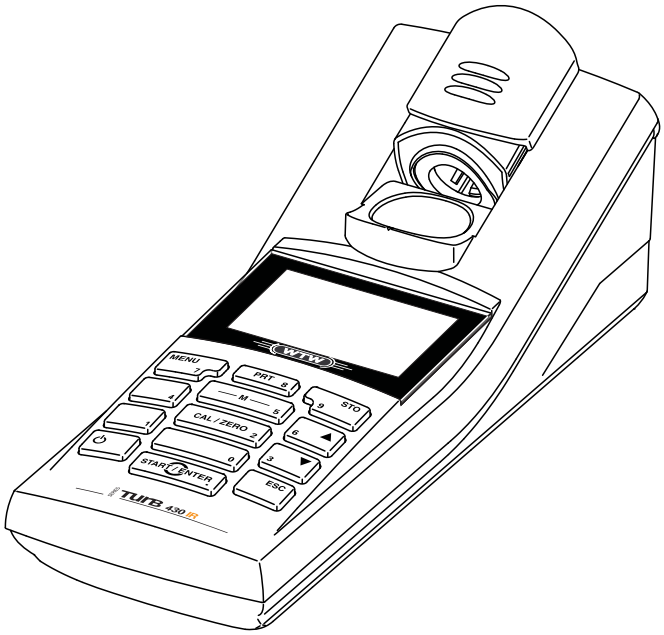

Turb 430 IR/T

HANDHELD TURBIDIMETER

WTW

a xylem brand

Copyright © 2022 Xylem Analytics Germany GmbH
Printed in Germany.

Contents

1 Overview 6
1.1 General features 6
1.2 Keypad 7
1.3 Display 8
1.4 Socket field 8
1.5 LabStation (optional) 9

2 Safety 10
2.1 Safety information 10
2.1.1 Safety information in the operating manual 10
2.1.2 Safety signs on the meter 10
2.1.3 Further documents providing safety information 10
2.2 Safe operation 11
2.2.1 Authorized use 11
2.2.2 Requirements for safe operation 11
2.2.3 Unauthorized use 11

3 Commissioning 12
3.1 Scope of delivery 12
3.2 Power supply 12
3.3 Connecting the LabStation 14
3.4 Initial commissioning 15

4 Operation 16
4.1 Switching on the meter 16
4.2 Inserting a cell 16
4.3 Preparing the cell and sample 17
4.3.1 Preparing the cell 17
4.3.2 Preparing the sample 19
4.4 General operating principles 19
4.4.1 Operating modes 19
4.4.2 Navigation 19
4.4.3 Navigation example 1: Setting the language 21
4.4.4 Example 2 on navigation: Setting the date and time . 22
4.5 System settings (*System* menu) 24
4.5.1 *Measured value memory* 24
4.5.2 *Display* 25
4.5.3 *Interface* 26
4.5.4 *Date/time* 26
4.6 Measuring the turbidity 27
4.6.1 Settings for turbidity measurement 28
4.7 Calibration 29
4.7.1 Settings for calibration 30
4.7.2 Carry out calibration 31
4.8 Memory 33

4.8.1 Storing measurement datasets 33
4.8.2 Filtering measurement datasets 34
4.8.3 Displaying measurement datasets 35
4.8.4 Outputting measurement datasets to the interfaces . . 35
4.8.5 Erasing stored measurement datasets 36
4.9 Transmitting data 36
4.9.1 Establishing the connection to a PC 36
4.9.2 Data transmission with the PC software LS Data. . . . 37
4.9.3 Data transmission with the Excel add-in MultiLab® Importer 37
4.9.4 Configuration for the data transmission to a terminal program 38
4.9.5 Establishing the connection to a printer 38
4.9.6 Starting the data transmission at the Turb 430 IR/T (at MultiLab® Importer, printer, terminal program 39
4.9.7 Examples of data transmitted (printer, terminal program) 40
4.10 Reset 41
4.10.1 Resetting the system settings 41
4.10.2 Resetting turbidimeter settings 42
4.11 Meter information 42
4.12 Software update 42

5 Maintenance, cleaning 44
5.1 Maintenance 44
5.1.1 Inserting/exchanging the batteries 44
5.1.2 Retrofitting the battery pack 45
5.2 Cleaning 46
5.2.1 Cleaning the cell shaft 46
5.2.2 Cleaning the cells 46
5.3 Packing 46

6 What to do if... 47
6.1 General errors 47
6.2 Turbidity 47

7 Technical data 48
7.1 General data 48
7.1.1 Turb 430 IR/T 48
7.1.2 LabStation 49
7.2 Turbidity 49
7.2.1 Turb 430 IR 49
7.2.2 Turb 430 T 50

8 Accessories and options 51
8.1 WTW accessories 51
8.1.1 Connecting cable 51

9 Firmware update 53

10 Disposal 54

11 Lists 55

12 Index 57

1 Overview

1.1 General features

The compact Turb 430 IR/T handheld precision turbidimeter enables you to carry out turbidity measurements quickly and reliably.

The Turb 430 IR/T turbidimeter provides the maximum degree of operating comfort, reliability and measuring certainty for all applications.



1 Keypad
2 Display
3 Cell shaft
4 Connectors

If you need further information or application notes, you can obtain the following material from WTW:

- Application reports
- Primers
- Safety datasheets.

Information on available literature is given in the WTW catalog or on the Internet at www.xylemanalytics.com.

1.2 Keypad

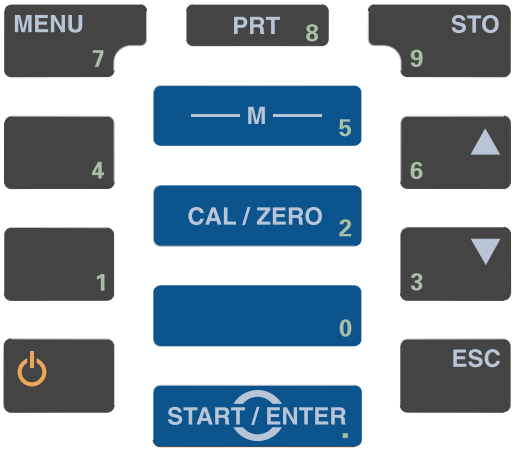

Key functions

M 5	Switch to the measured value display **<M>**
CAL / ZERO 2	Start calibration **<CAL>**
START / ENTER	Open menus / confirm entries / start measurement **<START·ENTER>**
MENU 7	Call up the *Configuration* menu (all settings are made here) **<MENU>**
	Switch the meter on or off **<ON/OFF>**
PRT 8	Output the display contents to the RS232 interface (e.g. print) **<PRT>**
STO 9	Open the *Store* menu: **<STO>** Quick storing: 2 x **<STO>**
6 ▲ 3 ▼	Highlight menu items or selection; Set values **<▲ >, <▼ >**
ESC	Switch to the next higher menu level / cancel input **<ESC>**

1.3 Display

The graphic display shows all information of the current measurement in the measured value display. The illumination enables to read the display even in the dark.

Example

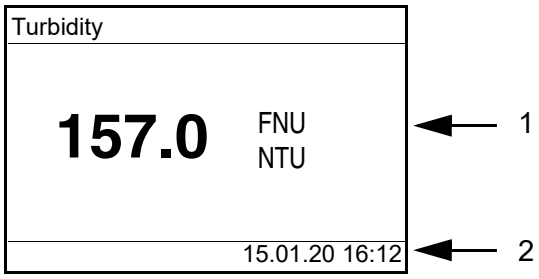

1 Measured value (with unit)

2 Program and citation form
Diameter of the cell and measuring range
Status line with date and time

1.4 Socket field

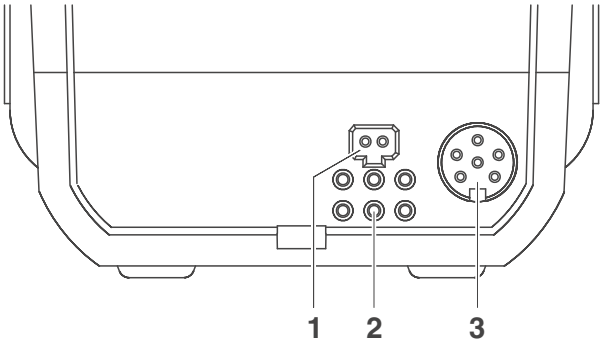

1 Power pack

2 Contact points for operation with the LabStation

3 RS232 (serial) interface

1.5 LabStation (optional)

With the LabStation, which is available as an accessory, you can conveniently use the Turb 430 IR/T in the laboratory.
Laboratory operation with the LabStation enables the following additional functions:

- Line power operation is possible to save the batteries or battery pack
- The battery pack in the Turb 430 IR/T is automatically charged as soon as the meter is placed in the LabStation.

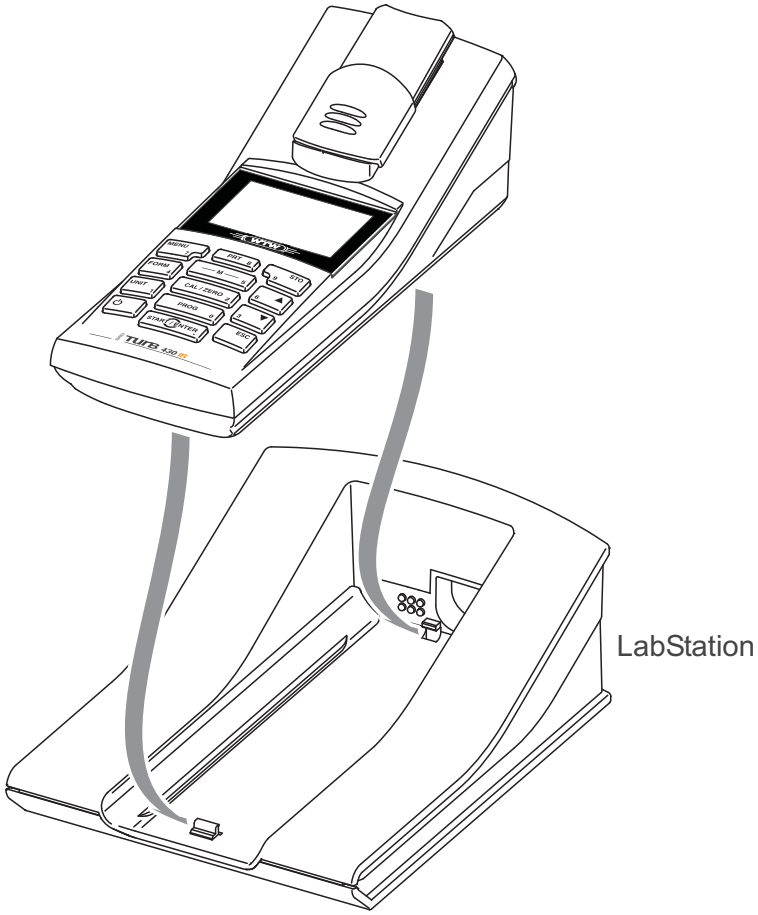

figure 1-1 LabStation

2 Safety

2.1 Safety information

2.1.1 Safety information in the operating manual

This operating manual provides important information on the safe operation of the meter. Read this operating manual thoroughly and make yourself familiar with the meter before putting it into operation or working with it. The operating manual must be kept in the vicinity of the meter so you can always find the information you need.

Important safety instructions are highlighted in this operating manual. They are indicated by the warning symbol (triangle) in the left column. The signal word (e.g. "CAUTION") indicates the level of danger:



WARNING
indicates a possibly dangerous situation that can lead to serious (irreversible) injury or death if the safety instruction is not followed.



CAUTION
indicates a possibly dangerous situation that can lead to slight (reversible) injury if the safety instruction is not followed.

NOTE
indicates a possibly dangerous situation where goods might be damaged if the actions mentioned are not taken.

2.1.2 Safety signs on the meter

Note all labels, information signs and safety symbols on the meter and in the battery compartment. A warning symbol (triangle) without text refers to safety information in this operating manual.

2.1.3 Further documents providing safety information

The following documents provide additional information, which you should observe for your safety when working with the measuring system:

- Operating manuals of further accessories
- Safety datasheets of calibration or maintenance accessories (such as buffer solutions, electrolyte solutions, etc.)

2.2 Safe operation



CAUTION

Danger of eye damage by visible and invisible LED radiation.
In the cell shaft of the Turb 430 IR there are light emitting diodes (LEDs) of the 1M class.
Do not look at the radiation using optical instruments.
With normal, authorized use there is no hazard.

2.2.1 Authorized use

This meter is authorized exclusively for turbidity measurements in the laboratory.

Only the operation and running of the meter according to the instructions and technical specifications given in this operating manual is authorized (see chapter 7 TECHNICAL DATA).

Any other use is considered unauthorized.

2.2.2 Requirements for safe operation

Note the following points for safe operation:

- The meter may only be operated according to the authorized use specified above.
- The meter may only be supplied with power by the energy sources mentioned in this operating manual.
- The meter may only be operated under the environmental conditions mentioned in this operating manual.
- The meter may only be opened if this is explicitly described in this operating manual (example: Inserting the batteries).

2.2.3 Unauthorized use

The meter must not be put into operation if:

- it is visibly damaged (e.g. after being transported)
- it was stored under adverse conditions for a lengthy period of time (storing conditions, see chapter 7 TECHNICAL DATA).

3 Commissioning

3.1 Scope of delivery

- Handheld turbidimeter Turb 430 IR or Turb 430 T
- 4 batteries 1.5 V type AA (in the battery compartment)
- Optional: battery pack and power pack with Euro plug and exchange plugs for USA, UK, and Australia
- Optional: LabStation
- 5 empty cells 28 mm with label to mark the cell
- AMCO®-Clear turbidity standard
- Microfiber cloth to clean the meter
- Compact operating manual and short operating manual
- CD-ROM with detailed operating manual



The optional parts of the scope of delivery are available as accessories (see section 8.1).

3.2 Power supply

You can operate the meter either with batteries, battery pack or a power pack. The power pack supplies the meter with low voltage (9 V DC). At the same time, the battery pack is charged. The battery pack is charged even while the meter is switched off.

The *LoBat* display indicator appears when the batteries or battery pack are nearly discharged.

Charging time of the battery pack

approx. 36 hours.



CAUTION

The line voltage at the operating site must lie within the input voltage range of the original power pack (see chapter 7 TECHNICAL DATA).
Use original power packs only (see chapter 7 TECHNICAL DATA).

NOTE

The battery pack should not be completely discharged. If you do not operate the instrument for a longer period of time you should charge the battery pack every six months.

Automatic switch-off function

The meter has an automatic switch-off function in order to save the batteries or battery pack (see section 4.5).

Display illumination

During operation with the batteries or battery pack the meter automatically switches off the display illumination if no key is pressed for 30 seconds. The illumination is switched on with the next keystroke again. The display illumination can also be switched off completely (see section 4.5.2).

The power pack and battery pack are available as accessories (see section 8.1).

Connecting the power pack (optional)

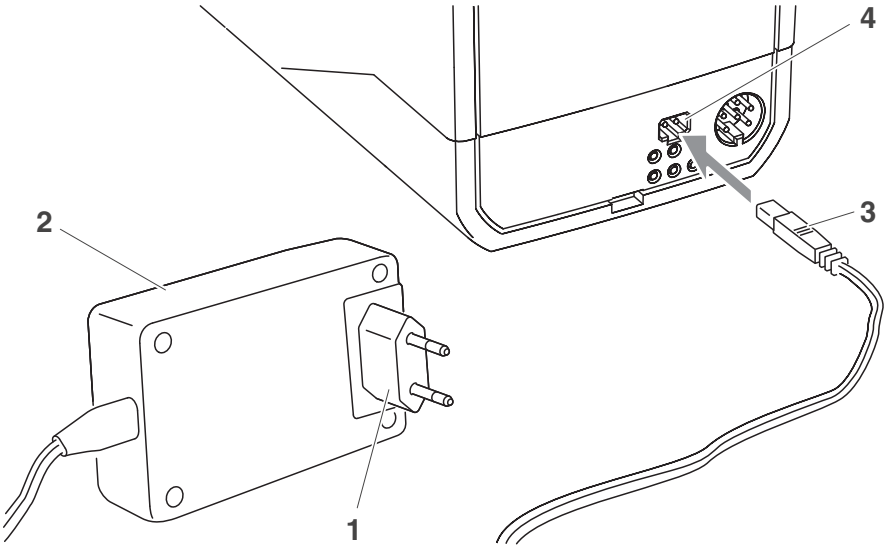

1 If necessary, replace the Euro plug (1) of the power pack (2) by the country-specific plug suitable for your country.

2 Connect the plug (3) to the socket (4) of the turbidimeter.

3 Connect the power pack unit to an easily accessible mains socket.

3.3 Connecting the LabStation

The LabStation is available as an accessory (see section 8.1).

In order to use the functions of the LabStation for operation in the laboratory, connect the LabStation and place the Turb 430 IR/T in the LabStation.

Connecting the LabStation (optional)

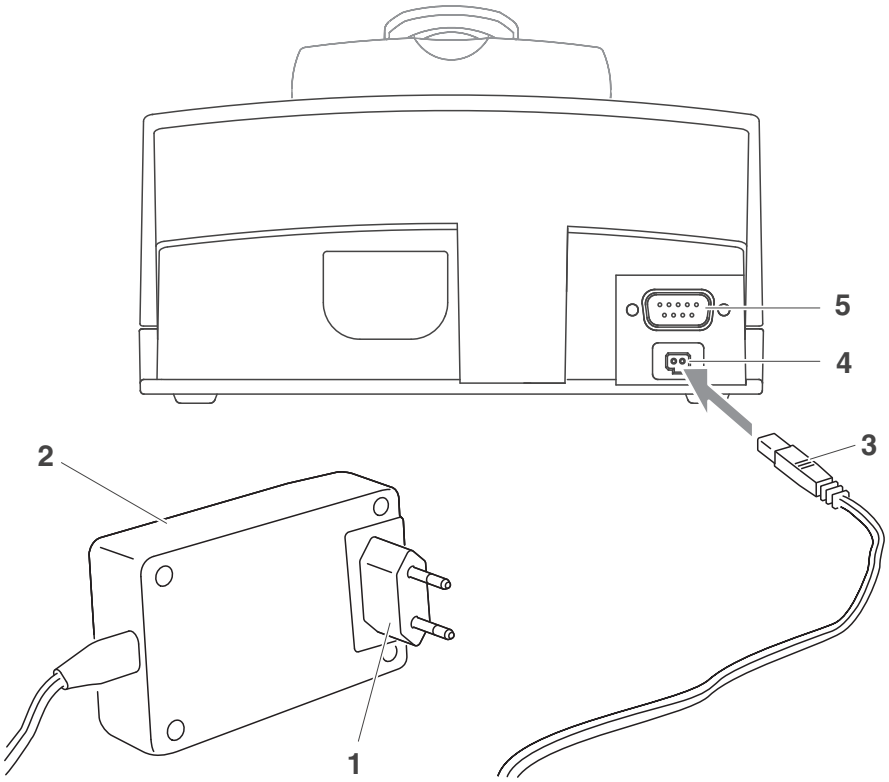

1 If necessary, replace the Euro plug (1) of the power pack (2) by the country-specific plug suitable for your country.

2 Connect the plug (3) to the socket (4) of the LabStation.

3 Connect a PC or printer to the socket (5) of the LabStation as necessary.

4 Connect the power pack unit to an easily accessible mains socket.

5 Place the Turb 430 IR/T in the LabStation.

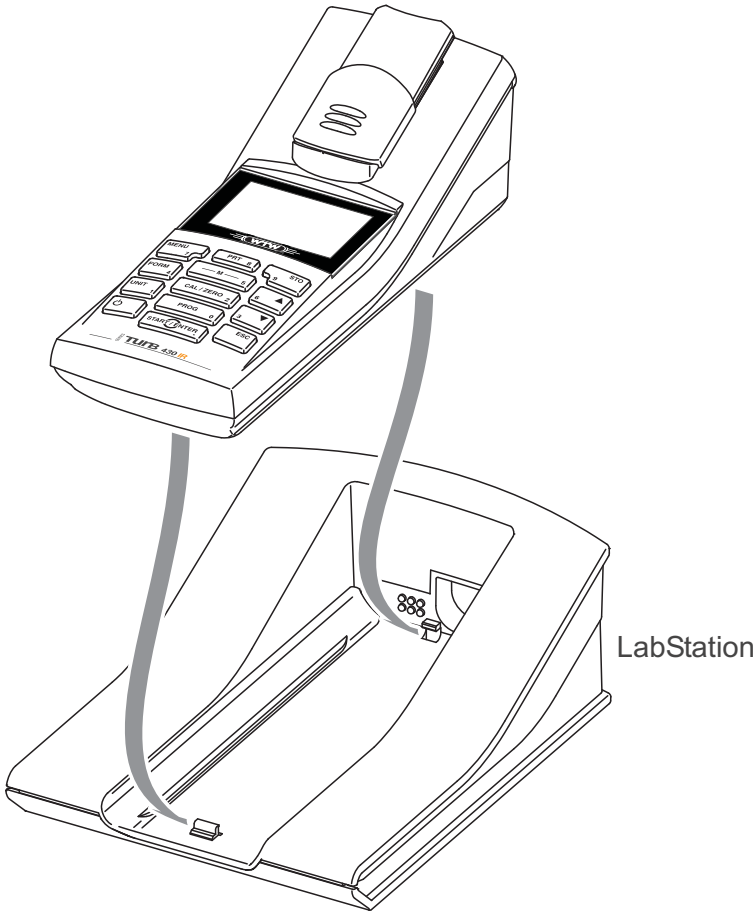

3.4 Initial commissioning

Perform the following activities:

- For
  - Battery pack operation: Insert the battery pack (see section 5.1.2)
  - Line power operation and charging the battery pack: Connect the power pack (see section 3.2)
  - operation with LabStation: connect the LabStation and place the Turb 430 IR/T in the LabStation (see section 3.3)
- Switch on the meter (see section 4.1)
- Set the language as necessary (see section 4.4.3)
- Set the date and time as necessary (see section 4.4.4)

When you set the language, date and time according to the mentioned sections of this operating manual you will quickly become familiar with the simple operation of the Turb 430 IR/T.

4 Operation

4.1 Switching on the meter

Switching on

Press the **<ON/OFF>** key.
The *Start* menu appears for 30 seconds.

The status line indicates the meter designation and the version number of the software.

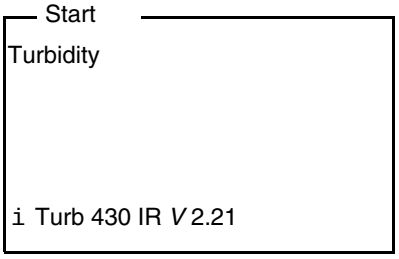

After a few seconds the meter automatically switches to the measuring mode.

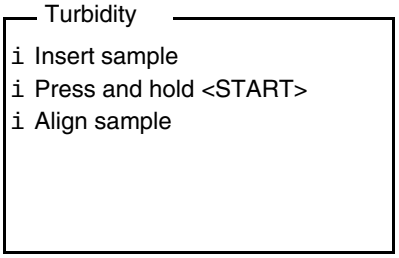

Using **<ESC>**, you can go to the *Start* menu from the measuring mode.

Switching off

Press the **<ON/OFF>** key.

4.2 Inserting a cell

Before using a cell for the first time, determine and mark the suitable measuring position for the cell (see section 4.3.1).

1 Push the dust cover (1) upward.
The cell shaft for 28 mm cells is open.

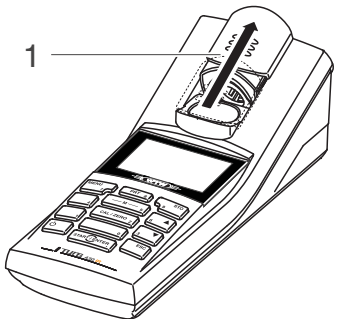

Inserting a 28 mm cell

2 Insert the marked cell so that it is positioned on the bottom of the cell shaft.



3 Align the cell marking (3) with the marking (4) of the cell shaft.
The cell is ready to be measured.

4.3 Preparing the cell and sample

Standard solutions and test samples are filled into cells for calibration and turbidity measurement with the Turb 430 IR/T.

The quality of the measured values depends on the optimum preparation of the cell and sample.

- Preparing the cell (see section 4.3.1)
  - Determine a suitable position in the cell shaft
  - Marking a cell
- Preparing the sample (see section 4.3.2)

4.3.1 Preparing the cell

Even completely clean quality cells exhibit tiny differences in their light trans-

mittance, e.g. inhomogeneities of the glass or small defects (e.g. scratches). Therefore, guidelines for accurate and reproducible measurements (e.g. US EPA) recommend that you always align the cell in the same way for measuring with the aid of arrows printed on or markings. This refers to sample cells and cells for calibration standards.

Prior to using a cell for the first time, the suitable position of the cell in the cell shaft is determined and marked to make sure the optical path is not disturbed. For the following measurements, the cell marking can just be aligned with the meter marking.

The cell marking should be checked regularly and renewed as necessary. The cell can be used until no suitable position for the optical path can be found.



We recommend that you do not treat any scratches in the cell with oily liquids (not even with so-called "special silicone oils"). They could unnecessarily soil the meter and your working environment. The optimum measurement accuracy is ensured by aligning the cells. Scratched cells have to be replaced.

1 Clean the cell (see section 5.2.2).

2 Stick the label for the marking onto the cell cap.

3 Fill the cell with a homogeneous solution (e.g. calibration standard 10.0 NTU).

4 Insert the cell (see section 4.2).

Determining a suitable position in the cell shaft

5
- Press and keep the **<START·ENTER>** key depressed.
- Turn the cell slowly and check the measured value:
  - The measured value at the position should be no maximum.
  - At the directly neighboring positions there should not be any sudden changes of the measured values. The deviations of measured values at the neighboring positions should not exceed the following values:
    Measured value < 1 NTU: max. +/- 0.02 NTU
    Measured value > 1 NTU: max. +/- 2 %

6 Release the **<START·ENTER>** key.
Measurement starts. The measured value is displayed.

Marking a cell

7 Mark the determined position (aligning) of the cell on the label.
The cell is now prepared for all following measuring and calibration actions.

4.3.2 Preparing the sample

Venting the sample

Air bubbles in the sample affect the measuring result to a massive extent because they have a large scattering effect on the incident light. Larger air bubbles cause sudden changes in the measured values whereas smaller air bubbles are recorded by the instrument as turbidity. Therefore, avoid or remove air bubbles:

Avoiding or removing air bubbles

- During sampling, ensure all movement is kept to a minimum
- If necessary, vent the sample (ultrasonic baths, heating or adding a surface-active substance to reduce the surface tension)

4.4 General operating principles

This section contains basic information on the operation of the Turb 430 IR/T.

Operating elements, display

An overview of the operating elements and the display is given in section 1.2 and section 1.3.

Operating modes, navigation

An overview of the operating modes of the Turb 430 IR/T and the navigation through menus and functions can be found in section 4.4.1 and section 4.4.2.

4.4.1 Operating modes

The instrument has the following operating modes:

- Measurement
  The display indicates measurement data in the measured value display
- Calibration
  The display indicates a calibration procedure with calibration information
- Data transmission
  The meter transmits measuring datasets or calibration records to the interface
- Configuration
  The display indicates a menu with further menus, settings and functions

4.4.2 Navigation

Measured value display

In the measured value display, open the menu with **<MENU>**.

Menus and dialogs

The menus for settings and dialogs in procedures contain further subelements. The selection is done with the keys **<▲> <▼>**.
The current selection is displayed inverse.

- Menus

The name of the menu is displayed at the upper edge of the frame. Menus are opened by confirming with **<START·ENTER>**. Example:

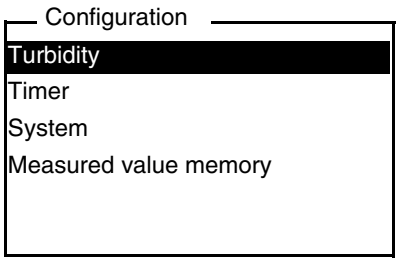

- Settings
  Settings are indicated by a colon. The current setting is displayed on the right-hand side. With **<START·ENTER>**, the selection of the possible settings is opened. Then the setting can be selected with **<▲> <▼>** and confirmed with **<START·ENTER>**.
  Example:

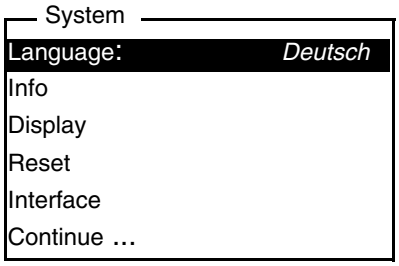

- Functions
  Functions are designated by the name of the function. They are immediately carried out when you confirm them with **<START·ENTER>**.
  Example: display the *Calibr. record* function
  (in the *Turbidity* menu).

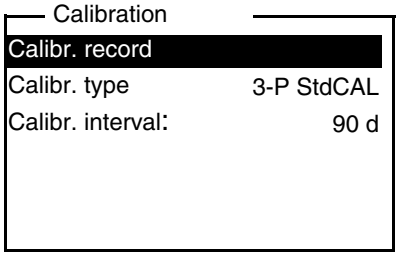

- Messages
  Information or operating instructions are designated by the `i` symbol. They cannot be selected.
  Example:

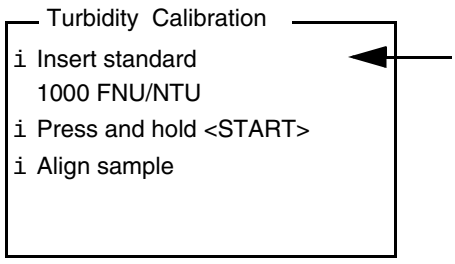

The principles of navigation are explained in the two following sections by reference of examples:

- Setting the language (section 4.4.3)
- Setting the date and time (see section 4.4.4).

4.4.3 Navigation example 1: Setting the language

The following example describes in the language of the country how to set the language. On delivery, English is set as the language in the Turb 430 IR/T. During initial commissioning, you can set the language in the menu, *Configuration* / *System* / *Language.*

1 In the measured value display:
Open the *Configuration* menu with **<MENU>**.
The instrument is in the configuration mode.

2 Select the *System* menu with **<▲> <▼>**.
The current selection is displayed in reverse video.

3 Using **<START·ENTER>**, open the *System* menu.

4 Select the *Language* menu with **<▲> <▼>**.
The current selection is displayed in reverse video.

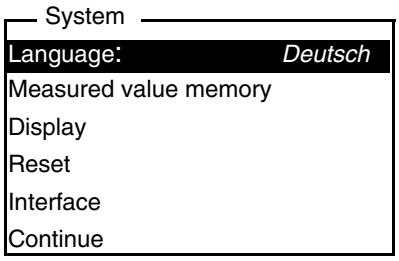

5 Open the setting of the *Language* with **<START·ENTER>**.

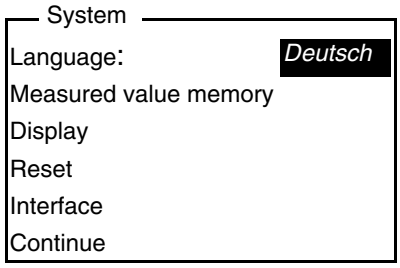

6 Select the required language with **<▲> <▼>**.

7 Confirm the setting with **<START·ENTER>**.
The setting is active. The menu is displayed in the selected language.

8 To make further settings, switch to the next higher menu level with **<ESC>**.

4.4.4 Example 2 on navigation: Setting the date and time

The meter has a clock with a date function. The date and time are indicated in the status line of the measured value display. When storing measured values and calibrating, the current date and time are automatically stored as well.

Numerals are generally entered via the number keys.

The correct setting of the date and time and date format is important for the following functions and displays:

- Current date and time
- Calibration date
- Identification of stored measured values.

Therefore, check the time at regular intervals.

The date and time are reset to default after a fall of the supply voltage (empty batteries).

Setting the date, time and date format

The date format can be switched from the display of day, month, year (*dd.mm.yy*) to the display of month, day, year (*mm/dd/yy* or *mm.dd.yy*).

1 In the measured value display:
Open the *Configuration* menu with **<MENU>**.
The instrument is in the configuration mode.

2 Select and confirm the *System* / *Weiter ...* / *Date/time* menu with **<▲> <▼>** and **<START·ENTER>**.

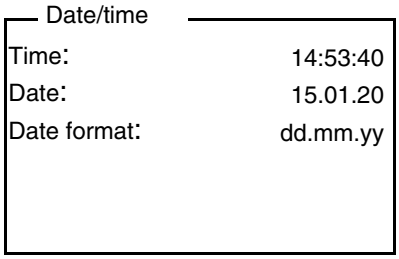

3 Select and confirm the *Time* menu with **<▲> <▼>** and **<START·ENTER>**.

A display for the entry of numerals with the number keys opens up.

Keys with additional characters printed on (orange) are assigned doubly. In the input fields you can directly enter digits with the orange number keys.

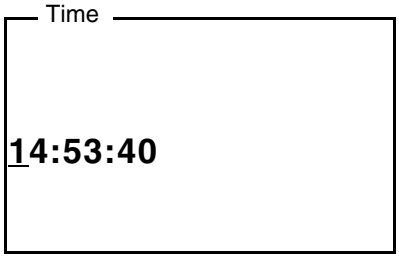

4 Enter the time using the number keys.

The digit to be changed is displayed underlined.

In the case of wrong entries, you can cancel the procedure with **<ESC>**.
After canceling with **<ESC>**, it is possible to enter all digits once again. The new digits are only taken over by confirming with **<START·ENTER>**.

4.5 System settings (*System* menu)

Settings/functions

The settings are in the menu, *Configuration* / *System*.
Move to the *Configuration* menu with the **<MENU>** key.

Menu item	Setting	Explanation
Language	*Deutsch* *English* *Français* *Español*	Select the language (see section 4.4.3)
Info		Information on hardware and software
Display	*Illumination* *Contrast* *Brightness*	Switch on/off the display illumination (see section 4.5.2)
Reset	-	Reset the system settings to the delivery condition (see section 4.10.1).
Interface	*Baud rate* *Output format*	Baud rate of the data interface (see section 4.5.3)
Weiter ... / *Date/time*	*Time* *Date* *Date format*	Time and date settings (see section 4.4.4)
Weiter ... / *Switchoff time*	10, 20, 30, 40, 50 min, 1, 2, 3, 4, 5, 10, 15, 20, 24 h	The automatic switchoff function switches the meter off if no entry is made for a specified period of time (*Switchoff time*). The function is only active with battery operation.
Weiter ... / *Beep*	*On* *Off*	Switches on/off the beep on keystroke

4.5.1 *Measured value memory*

In the *Measured value memory* menu, you find functions to display and edit the stored measurement datasets:

The settings are in the menu, *Configuration* / *Measured value memory*.
Move to the *Configuration* menu with the **<MENU>** key.

Settings/functions

Menu item	Setting/function	Explanation
Display	-	Displays in pages all measurement datasets that correspond to the filter settings. Further options: ● Scroll through the datasets with **<▲> <▼>**. ● Output the displayed dataset to the interface with **<PRT>**. ● Quit the display with **<ESC>**.
RS232 download	-	Downloads to the interface all measurement datasets that correspond to the filter settings. The download is ordered according to the date and time. The process can take several minutes. To terminate the process prematurely, press **<ESC>**.
Data filter	see section 4.8.2	Allows to set filter criteria in order to display and download datasets to the interface.
Delete	-	Erases the entire contents of the measuring data memory, independent of the filter settings. Note: All calibration data remain stored when this action is performed.

All details on the subjects of memory and stored data are given in section 4.8.2.

4.5.2 *Display*

In the *Configuration* / *System* / *Display* menu, you set the display features:

The settings are in the menu, *Configuration* / *System* / *Display*. Move to the

Configuration menu with the **<MENU>** key.

Settings

Menu item	Setting	Explanation
Illumination	*Auto off*	The automatic switchoff function switches off the display illumination if no key has been pressed for 30 seconds. The function is only active with battery operation.
	On *Off*	Switches the display illumination on or off permanently
Contrast	0 ... 100 %	Changes the display contrast
Brightness	0 ... 100 %	Changes the display brightness

4.5.3 *Interface*

In the *Interface* menu, you set the features of the interface.

The settings are in the menu, *Configuration* / *System* / *Interface*. Move to the *Configuration* menu with the **<MENU>** key.

Settings

Menu item	Setting	Explanation
Baud rate	1200, 2400, 4800, 9600, 19200	Baud rate of the data interface
Output format	*ASCII* *CSV*	Output format for data transmission For details, see section 4.9.6

4.5.4 *Date/time*

In the *Configuration* / *System* / *Weiter ...* / *Date/time* menu, you set the system clock:

The settings are in the menu, *Configuration* / *System* / *Weiter ...* / *Date/time*.

Move to the *Configuration* menu with the **<MENU>** key.

Settings

Menu item	Setting	Explanation
Time	hh:mm:ss	Enter the time with the number keys
Date		Enter the date with the number keys
Date format	*dd.mm.yy* *mm.dd.yy* *mm/dd/yy*	Settings of time and date.

4.6 Measuring the turbidity

NOTE
Never pour any liquids directly into the cell shaft. Always use a cell for measurement. The meter only measures precisely if the cell is closed with the black light protection cap and aligned with the marking of the measuring position determined.

The outside of the cell always has to be clean, dry, and free of fingerprints and scratches. Clean the cells before starting to measure (see section 5.2.2). Only hold the cells by the top or by the black light protection cap.

With turbidity values under 1 FNU/NTU, the measured value is strongly influenced by the cell and its alignment.

To increase measurement accuracy with turbidity values under 1 FNU/NTU, calibration in the 0.02 FNU/NTU standard and later measurement should take place in the same cell.

Measuring

For quick and easy measuring we recommend that you use marked cells (see section 4.3.1 PREPARING THE CELL).

If your cells are not marked you can determine the suitable position of the individual cells in the cell shaft while measuring.

1 Clean the cell (see section 5.2.2).

2 Rinse the cell:
Pour approximately 10 ml sample into the cell. Close the cell and rotate it several times before throwing the sample away.

3 Repeat the rinsing procedure twice more.

4 Fill the cell with the sample to be measured (approx. 15 ml). Close the cell with the black light protection cap.

5 Insert the cell (see section 4.2).

6 Align the marking on the cell cap with the marking at the cell shaft.

or

Determine the suitable position of the cell in the cell shaft (see DETERMINING A SUITABLE POSITION IN THE CELL SHAFT, page 18).

7 Press the **<START·ENTER>** key.

Measurement starts. The measured value is displayed.

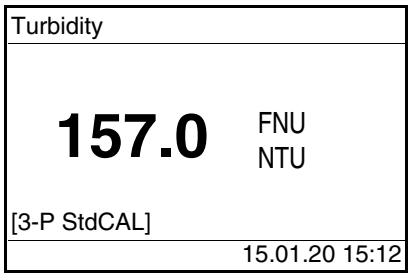

The measured value is automatically output to the interfaces (= AutoPrint).

8 Repeat the steps 2 to 8 for further samples.

Display with measuring range overflow

If the measured value is outside the measuring range of the Turb 430 IR, it is indicated on the display:

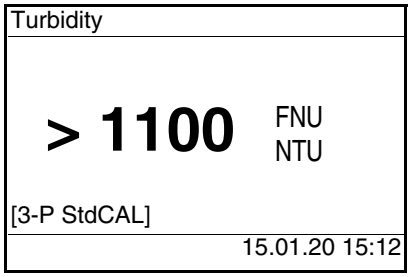

4.6.1 Settings for turbidity measurement

Overview

For turbidity measurements, the following settings are possible in the menu *Configuration* / *Turbidity*:

- *Calibration*
- *Rücksetzen*

Settings/functions

The settings are in the menu, *Configuration* / *Turbidity*.
Move to the *Configuration* menu with the **<MENU>** key.

Menu item	Setting	Explanation
Calibration	...	Settings and data in the menu *Calibration* (see section 4.7.1).
Rücksetzen		Reset all settings for the *Turbidity* measuring mode (see section 4.10.2)

4.7 Calibration

When to calibrate?

- Routinely within the framework of the company quality assurance
- When the calibration interval has expired
- With a temperature change

Calibration types and calibration standards

The following calibration types can be selected for calibration:

Calibration type	Standards (FNU/NTU)	Explanation
3-P StdCAL	1000 10.0 0.02	Guided calibration with three permanently set calibration standard solutions. The *3-P StdCAL* calibration is the recommended calibration type for most applications.
QuickCAL	10.0	Guided calibration with a single calibration standard. With the *QuickCAL* calibration value, the calibration graph of the *3-P StdCAL* calibration in the lower measuring range is adjusted. The calibration is only successful if the measured value for the standard deviates from the value of the *3-P StdCAL* calibration by less than ±50 %. The measuring range for measurements with the *QuickCAL* calibration is limited to the lower range (see section 7.2 TURBIDITY).

Calibration type	Standards (FNU/NTU)	Explanation
FreeCAL	2 ... 5	Guided flexible calibration with 2 to 5 freely selectable calibration standards. The nominal values for the calibration standards are entered manually. The order of the entered nominal values corresponds to the order of the calibration standards during the calibration process.

4.7.1 Settings for calibration

Settings

The settings are in the menu *Configuration* / *Turbidity* / *Calibration*.
To switch to the *Configuration* menu, press the **<MENU>** key.

Menu item	Possible setting	Explanation
Calibr. record	-	Display the calibration record of the last calibration.
Calibr. type	*3-P StdCAL* *FreeCAL* *QuickCAL*	The selected calibration type is used to calculate the current measured value. The active calibration type is indicated in the measured value display, and stored together with a measured value. When you start calibration with the **<CAL>** key, it is always started with the selected calibration type.
Standard (only with *Calibr. type FreeCAL*)	*Number*	1 ... 5 Number of calibration standards for the *Calibr. type FreeCAL*
	Standard 1 ... *Standard* 5	Here the nominal values are entered for all calibration standards

Menu item	Possible setting	Explanation
Calibr. interval	1 ... 999 d	Calibration interval for turbidity measurement (in days). If the calibration interval has expired, the meter reminds you to calibrate before each measurement.

4.7.2 Carry out calibration

Preparing the calibration

For quick and easy measuring we recommend that you use marked cells with the calibration standards (see section 4.3.1 PREPARING THE CELL).

If your cells are not marked you can determine the suitable position of the individual cells in the cell shaft while measuring.

Perform the following preparatory activities when you want to calibrate:

1 Select the calibration type (menu *Configuration* / *Turbidity* / *Calibr. type*.).

2 Clean the cell (see section 5.2.2).

3 Insert the cell (see section 4.2).

Carrying out a calibration (example: 3-P StdCAL)

4 Press the **<CAL>** key.
The guided calibration with the selected calibration type starts. Follow the instructions on the display.

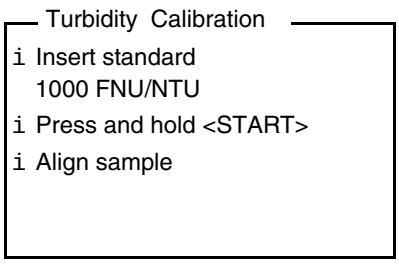

5 Insert the cell with the displayed calibration standard (here e.g. 1000 FNU/NTU) in the cell shaft (see section 4.2).

6 Align the marking on the cell cap with the marking at the cell shaft.
or
Determine the suitable position of the cell in the cell shaft (see DETERMINING A SUITABLE POSITION IN THE CELL SHAFT, page 18).

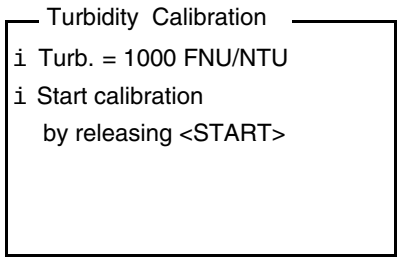

7 Release the **<START·ENTER>** key.
Measurement of the calibration standard begins.

Before measuring the third calibration standard of 0.02 FNU/NTU you can exit the calibration with **<ESC>** at any time.
The new calibration data are discarded. The old calibration data are used.

8 Repeat the steps 4 - 6 with the calibration standards 10.00 FNU/NTU and 0.02 FNU/NTU.
After measuring the 0.02 FNU/NTU calibration standard, the calibration result is displayed.
The calibration is complete.

9 Confirm the calibration result with **<START·ENTER>**.
The calibration record is displayed.

10 Confirm the calibration record with **<START·ENTER>**.
The display shows instructions for the first measurement.
The valid calibration is indicated on the display as a status, e.g. [3-P StdCAL].

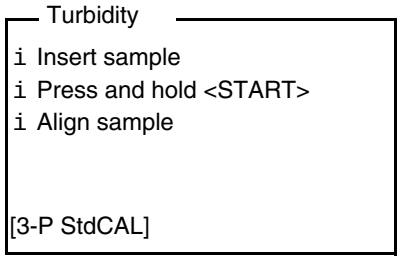

Calibration record

At the end of each calibration procedure a calibration info (`i` symbol) and the calibration record is displayed.

For each calibration type the last calibration is stored in the calibration memory.

Display calibration data and output to interface

You can view the data of the last calibration on the display. Subsequently, you can download the displayed calibration data to the interface, e. g. to a printer or PC, with the **<PRT>** key.

The calibration record of the last calibration is to be found under the menu item, *Configuration* / *Turbidity* / *Calibr. record*.

Sample printout of a record

```
15.01.20 16:13
Turb 430 IR Ser. no. 12345678
Calibration Turbidity
Calibr. date 15.01.20 16:13:33
Calibr. interval 90 d
3-P StdCAL
Standard 1          1000 NTU
Standard 2          10.0 NTU
Standard 3          0.02 NTU
```

4.8 Memory

The meter has 2000 storage locations for measurement datasets.

You can transmit measured values (datasets) to the data memory with the **<STO>** key.

Each data storing process transmits the current dataset to the interface at the same time.

The number of memory locations that are still free is displayed in the *Store* menu. The number of memory locations that are occupied is displayed in the *System* / *Measured value memory* menu.

Measurement dataset

A complete dataset consists of:

- Date/time
- ID number (ID)
- Measured value

4.8.1 Storing measurement datasets

Proceed as follows to transmit to the data memory and simultaneously output to the interface a measurement dataset:

1 Press the **<STO>** key.
The *Store* display appears.

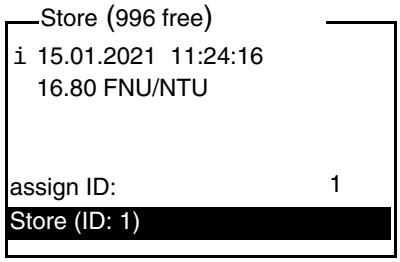

2 Using **<▲> <▼>**, **<START·ENTER>** and the number keys, change and confirm the ID number (*ID*) as necessary (0 ... 999).

3 Using **<START·ENTER>** or **<STO>**, confirm *Store*.
The dataset is stored. The meter switches to the measured value display.

A measurement dataset is quickly stored by twice pressing **<STO>**. It is stored with the ID last set.

If the memory is full

You can erase the entire memory (see section 4.8.5), or overwrite the oldest dataset with the next storing procedure.
A security prompt appears before a dataset is overwritten.

4.8.2 Filtering measurement datasets

The functions to display and download stored measurement datasets (see section 4.5.1) refer to all stored measurement datasets that correspond to the specified filter criteria.

The settings are in the menu, *Configuration* / *System* / *Measured value memory* / *Data filter*.
Move to the *Configuration* menu with the **<MENU>** key.

Data filter

Menu item	Setting/function	Explanation
Filter		Filter criteria:
	No filter	Data filter switched off
	ID	Selection according to ID number
	Datum	Selection according to period
	ID + Date	Selection according to period and ID number

Menu item	Setting/function	Explanation
ID		Entry of filter criteria These menu items are made visible by selecting the filter criteria in the *Filter* menu.
Datum		

4.8.3 Displaying measurement datasets

You can read out stored datasets to the display. Only those datasets are displayed that correspond to the selected filter criteria (see section 4.8.2).

Start reading out the data to the display in the menu, *Configuration* / *System* / *Measured value memory* / *Display*.

Representation of a dataset

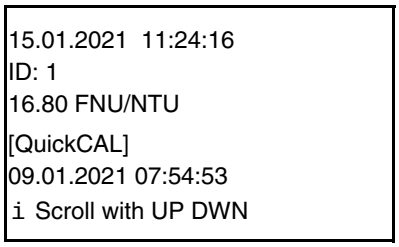

Further datasets that correspond to the filter criteria are displayed with the **<▲> <▼>** keys.

Quitting the display

To quit the display of stored measurement datasets, you have the following options:

- Switch directly to the measured value display with **<M>** (short pressure).
- Leave the display and switch to the superordinate menu with **<ESC>** or **<START·ENTER>**.

4.8.4 Outputting measurement datasets to the interfaces

You can output stored datasets to the interface. Only those datasets are downloaded that correspond to the selected filter criteria (see section 4.8.2).

The datasets are downloaded in the specified output format (see section 4.9.5).

The output of the data to the interface is started in the menu, *Configuration* / *Measured value memory* / *RS232 download*.

4.8.5 Erasing stored measurement datasets

You can erase the stored measurement datasets altogether if you no longer need them.

Erasing all measurement datasets is done in the menu, *Configuration* / *System* / *Measured value memory* / *Delete*.



Erasing individual datasets is not possible. If all memory locations are occupied, however, it is possible to overwrite the oldest dataset at a time. A security prompt appears before a dataset is overwritten.

4.9 Transmitting data

To transmit data via the interfaces, first establish a connection to a PC or printer (see section 4.9.1).

With the PC software LS Data you can, without further configuration, transmit or save measurement and calibration data for GLP-compliant data management to LS Data or transmit them to Excel and thus to LIMS.

With the MultiLab® Importer (an add-in for Microsoft Excel) you can transmit data from the meter directly to an open Excel sheet (see section 4.9.3).

The connection to a printer or terminal program has to be configured so data can be safely transmitted (see section 4.9.4).

4.9.1 Establishing the connection to a PC

You have the following possibilities of transmitting data from the Turb 430 IR/T to a PC

- via the RS232 interface of the Turb 430 IR/T
  or
- via the RS232 interface of the LabStation LS Flex/430
  (accessories, see chapter 8)

Prerequisites

- Microsoft Windows PC with one of the following operating systems:
  - Windows 7
  - Windows 8
  - Windows 10.
- Free interface of the PC
  - Serial COM interface

or

– USB interface:
and USB adapter (accessory)

- Connection to the PC
  – Connecting cable AK 540/B (accessory, see chapter 8)
  or
  – LabStation LS Flex/430 (accessory, see chapter 8)

Establishing a connection

1 Connect the Turb 430 IR/T to the PC via the RS232 or via the LabStation LS Flex/430 (see operating manual LS Flex/430).

The connection to the PC is established. The data can be transferred to the PC:

- via the PC software LS Data (see section 4.9.2)
- via the MultiLab® Importer (see section 4.9.3)
- via a terminal program (see section 4.9.6).

4.9.2 Data transmission with the PC software LS Data

With the PC software LS Data you can transmit and save to the LS Data any measurement- and calibration data for GLP compliant data management (menu item *Datei / Speichern unter...* / *. csv (CSV format)) or transmit and save to Excel (menu item *Datenaustausch* / *Export (.xls)*) and thus transfer to LIMS.

1 Establish the connection to a PC (see section 4.9.1).

2 Transmit data (see operating manual of the PC software LS Data).

4.9.3 Data transmission with the Excel add-in MultiLab® Importer

Set the CSV output format for datasets at the Turb 430 IR/T. It is selected in the menu, *Configuration* / *System* / *Interface* / *Output format* (see section 4.9.5 ESTABLISHING THE CONNECTION TO A PRINTER).

1 Establish the connection to a PC (see section 4.9.1).

2 Establish a data connection (see operating manual MultiLab® Importer).

3 Transmit data (see section 4.9.6).

4.9.4 Configuration for the data transmission to a terminal program

Via the RS232 interface you can also transmit data to a PC with the aid of a so-called terminal program.

1 Establish the connection to a PC (see section 4.9.1).

2 Determine the output format of datasets at the Turb 430 IR/T (see section 4.9.5 ESTABLISHING THE CONNECTION TO A PRINTER

It is selected in the menu, *Configuration* / *System* / *Interface* / *Output format*.

Examples of the output formats (see section 4.9.6)

3 Configure the RS232 interface of the Turb 430 IR/T and the terminal program.

The transmission data specified in the Turb 430 IR/T and terminal program have to match.

- RS232 interface (see section 4.5.3).
- Terminal (see operating manual of your terminal).

Transmission data:

Baud rate	can be selected from: 1200, 2400, 4800, 9600, 19200
Handshake	none
Parity	None
Data bits	8
Stop bits	1

4 Transmit data (see section 4.9.6).
Examples of transmitted data (see section 4.9.7)

4.9.5 Establishing the connection to a printer

Via the RS 232 interface, you can transmit data to an external printer.

Suitable printers

- P3002 (see section 8 ACCESSORIES AND OPTIONS)
- P3001 (no longer available as accessory)

Socket assignment (RS232)

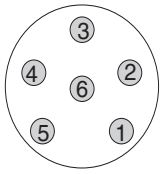

RS 232
REC

1 RTS
2 RxD
3 TxD
4 DTR
5 SG
6 CTS

1 Connect the RS232 interface to the external printer with the AK540/S cable.

The Turb 430 IR/T is pre-configured for the connection of the printer.

2 For error-free data transmission:

The RS232 interface of the Turb 430 IR/T and the printer have to be set to the same transmission speed (*Baud rate*).

- The baud rate of the Turb 430 IR/T is selected in the menu *Configuration* / *System* / *Interface* / *Baud rate*.
- The setting of the baud rate of the printer and the default setting are in the documentation of your printer.

3 Selecting the output format of datasets (Turb 430 IR/T)

It is selected in the menu, *Configuration* / *System* / *Interface* / *Output format*.

Examples of the output formats (see section 4.9.7)

4 Transmitting data (see section 4.9.6).
Examples of transmitted data (see section 4.9.7)

4.9.6 Starting the data transmission at the Turb 430 IR/T (at MultiLab® Importer, printer, terminal program

Measured values are automatically output to the interfaces (= AutoPrint).

With a printer connected or a connection to a terminal program existing, you can transmit data in the following ways:

Individual data (e.g. calibration protocol, measured value)	● Display the data and press **<PRT>**. The data being shown on the display are transmitted to the interface. ● Simultaneously with every manual storage process.
Stored measured values	● Display the saved data and press **<PRT>**. ● All datasets according to the filter criteria (section 4.5) via the *RS232 download* function (see section 4.8.2.).

4.9.7 Examples of data transmitted (printer, terminal program)

The data are output according to the selected output format.

Example; output format ASCII

The ASCII output format delivers formatted datasets.

```
Turb 430 IR Ser. no. 12345678
15.01.20 09:56:20
ID: 1
10.1 NTU
[3-P StdCAL] : 15.01.20 08:57:45

_____________________________________

Turb 430 IR Ser. no. 12345678
15.01.20 08:48:08
ID: 1
26.1 NTU
[3-P StdCAL] : 15.01.20 08:57:45

_____________________________________

etc...
```

Example, output format CSV

The CSV output format delivers datasets separated by ";".

The data are output in the following order:

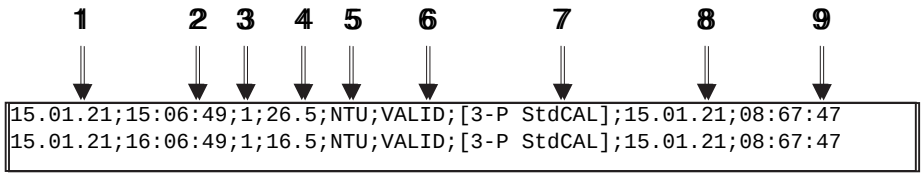

1 Date of storing
2 Time of storing
3 Selected ID
4 Measured value or
Upper/lower measuring range limit
(only with measured value status, OFL/UFL)
5 Unit of the measured value
6 Measured value status
* VALID: Measured value valid
* INVALID: Measured value invalid
* UFL: Measured value below the lower measuring range limit
* OFL: Measured value above the upper measuring range limit
7 Calibration status: Calibration type that was selected for the measurement
8 Calibration status: Date of calibration
9 Calibration status: Time of calibration

If the connected external printer does not print, please check whether the same baud rate is set at the Turb 430 IR/T and printer.

4.10 Reset

You can reset (initialize) all system and measurement settings.

4.10.1 Resetting the system settings

With the *System* / *Reset* function, all resettable settings are reset.

- Settings for *Turbidity* (see section 4.10.2)
- System settings

System setting	Default settings
Language	*English*
Baud rate	4800 Baud

System setting	Default settings
Output format	ASCII
Illumination	*Auto off*
Contrast	50 %
Brightness	50 %
Switchoff time	30 min
Beep	*On*

4.10.2 Resetting turbidimeter settings

With the *Turbidity* / *Reset* function, all turbidimeter settings are reset.

Calibration settings

Setting	Default settings
Calibr. interval	90 d
Calibr. type	3-P StdCAL
FreeCAL Number	2
FreeCAL Standard 1	10 FNU/NTU

4.11 Meter information

The following meter information is listed in the *Configuration* / *Info* menu:

- Model designation
- Software version
- Series number of the meter

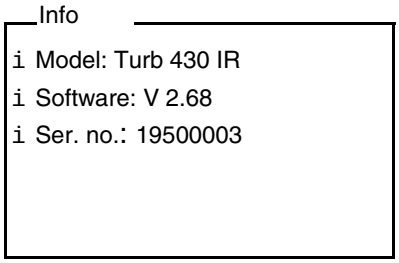

4.12 Software update

With a software update you obtain the current instrument software (see ap-

pendix).

The current software version can be found on the Internet at www.xylem-analytics.com.

The proceeding for updating the software is given in the appendix (see chapter 9 FIRMWARE UPDATE).

5 Maintenance, cleaning

5.1 Maintenance

The meter is almost maintenance-free.
The only maintenance task is replacing the batteries or battery pack.

5.1.1 Inserting/exchanging the batteries

NOTE
Make sure that the poles of the batteries are positioned correctly. The ± information in the battery compartment must match the information on the battery.

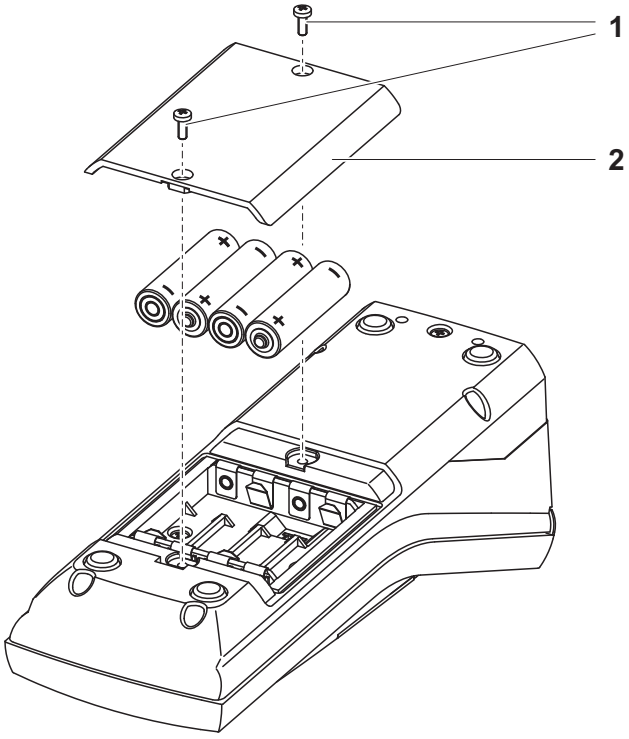

1 Open the battery compartment:
   – Unscrew the two screws (1) on the underside of the meter
   – Remove the lid of the battery compartment (2).

2 If necessary, take four old batteries out of the battery compartment.

3 Insert four batteries (3) in the battery compartment.

4 Close the battery compartment and fix it with the screws.

5.1.2 Retrofitting the battery pack

NOTE
Use original WTW battery packs only.

Together with the power pack the battery pack is available as an accessory (see section 8.1).

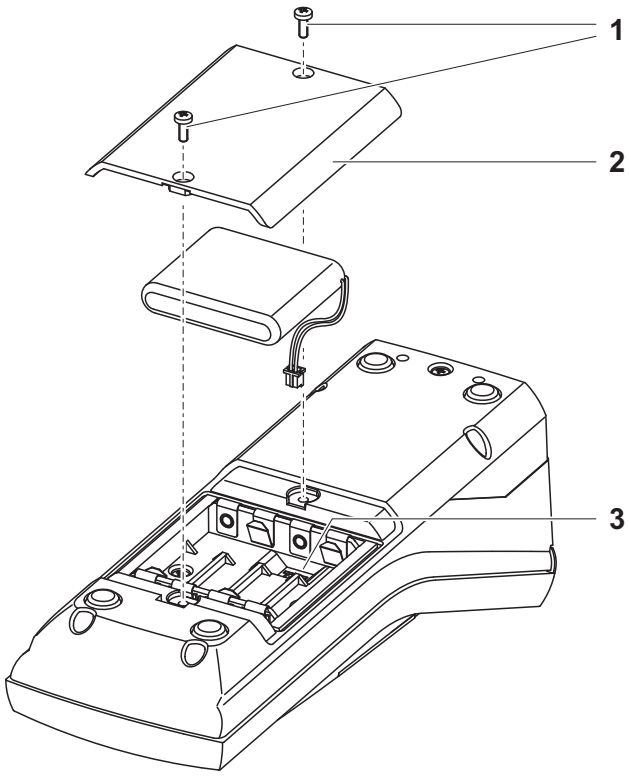

1 Open the battery compartment:
   – Unscrew the two screws (1) on the underside of the meter
   – Remove the lid of the battery compartment (2).

2 If necessary, take four old batteries out of the battery compartment.

3 Connect the cable of the battery pack with the socket (3) on the bottom of the battery compartment and insert the battery pack in the battery compartment.

4 Close the battery compartment and fix it with the screws.

5.2 Cleaning

Occasionally wipe the outside of the measuring instrument with a damp, lint-free cloth. Disinfect the housing with isopropanol as required.

NOTE
The housing components are made of synthetic materials (polyurethane, ABS and PMMA). Thus, avoid contact with acetone and similar detergents that contain solvents. Remove any splashes immediately.

5.2.1 Cleaning the cell shaft

If liquid is in the cell shaft (e.g. due to a spilled cell), clean the cell shaft as follows:

1 Switch the Turb 430 IR/T off and pull out the power plug.

2 Rinse the cell shaft with distilled water.

5.2.2 Cleaning the cells

Cells have to be clean, dry, and free of fingerprints. Therefore, clean them regularly:

1 Clean the cells inside and out with hydrochloric acid or laboratory soap.

2 Rinse several times with distilled water.

3 Let them dry in the air.

4 Only hold the cells by the top or by the light protection cap so that the optical path is not impaired.

5 Before measuring, clean the cell with the enclosed cleaning cloth.

5.3 Packing

This meter is sent out in a protective transport packing.
We recommend: Keep the packing material. The original packing protects the meter against damage during transport.

6 What to do if...

6.1 General errors

Display, *LoBat*

Cause	Remedy
– Batteries or battery pack almost empty.	– Insert new batteries – Charge the battery pack(see section 3.2)

Meter does not react to keystroke

Cause	Remedy
– Software error – Operating condition undefined or EMC load unallowed	– Processor reset: Press the **<START·ENTER>** and **<PRT>** key simultaneously.

Error message, *Error 0, 8, 16, 16384*

Cause	Remedy
– Instrument error	– Repeat measurement – Meter defective, Send in the meter for repair, stating the error number

6.2 Turbidity

Error message Measured values obviously incorrect

Cause	Remedy
– Cell not correctly inserted	– Lock the cell into place
– Cell contaminated	– Clean the cell
– Calibration too old	– Carry out calibration

Measured value display *< 0.01 FNU*

Cause	Remedy
– Calibration defective	– Carry out calibration
– Measured value outside the measuring range	– Not possible

7 Technical data

7.1 General data

7.1.1 Turb 430 IR/T

Dimensions	Approx. 236 x 86 x 117 mm	
Weight	Approx. 0.6 kg (without batteries)	
Mechanical structure	Type of protection	IP 67
Electrical safety	Protective class	III
Test certificates	CE, FCC	
Ambient conditions	Storage	- 25 °C ... + 65 °C
	Operation	0 °C ... + 50 °C
	Climatic class	2
Allowable relative humidity	Yearly mean: 30 days /year: Other days:	75 % 95 % 85 %
Power supply	Batteries	4 x 1.5 V, type AA
	Operating time with battery operation	Turb 430 IR: approx. 3000 measurements Turb 430 T: approx. 2000 measurements
	Battery pack (optional)	5 x 1.2 V nickel metal hydride (NiMH), type AA
	Power pack/ charging device (optional)	FRIWO FW7555M/09, 15.1432.500-00 Friwo Part. No. 1883259 ---------- RiHuiDa RHD20W090150 ---------- Input: 100 ... 240 V ~ / 50 ... 60 Hz / 400 mA Output: 9 V = / 1.5 A Connection max. overvoltage category II Primary plugs contained in the scope of delivery: Euro, US, UK and Australian.

Serial interface

Connection of the cable AK 540/B or AK 540/S

Baud rate	Adjustable: 1200, 2400, 4800, 9600, 19200 baud
Type	RS232
Data bits	8
Stop bits	2
Parity	None
Handshake	RTS/CTS
Cable length	Max. 15 m

Guidelines and norms used

EMC	EC guideline 89/336/EEC EN 61326-1/A3:2003 FCC Class A
Meter safety	EEC guideline 73/23/EEC EN 61010-1 :2001
Climatic class	VDI/VDE 3540
IP protection class	EN 60529:1991

7.1.2 LabStation

Dimensions	Approx. 236 x 82 x 170 mm
Weight	Approx. 0.6 kg

7.2 Turbidity

7.2.1 Turb 430 IR

Measuring principle	Nephelometric measurement according to DIN EN ISO 7027	
Light source	Infrared LED	
Measuring range	0.01 ... 1100 FNU/NTU	
Resolution	In the range 0.01 ... 9.99	max. 0.01 FNU/NTU
	In the range 10.0 ... 99.9	max. 0.1 FNU/NTU
	In the range 100 ... 1100	max. 1 FNU/NTU

Accuracy	In the range 0 ... 1100 FNU/NTU	± 2 % of the measured value or ± 0.01 FNU/NTU
Repeatability	0.5% of the measured value	
Response time	4 seconds	
Calibration	Automatic 3-point calibration	
Minimum filling volume of the cell	15 ml	

7.2.2 Turb 430 T

Measuring principle	Nephelometric measurement according to US EPA 180.1	
Light source	White light tungsten lamp	
Measuring range	0.01 ... 1100 NTU	
Resolution	In the range 0.01 ... 9.99	max. 0.01 NTU
	In the range 10.0 ... 99.9	max. 0.1 NTU
	In the range 100 ... 1100	max. 1 NTU
Accuracy	In the range 0 ... 500 NTU	± 2 % of the measured value or ± 0.01 NTU
	In the range 500 ... 1100 NTU	± 3% of measured value
Repeatability	1% of the measured value	
Minimum filling volume of the cell	15 ml	
Response time	7 seconds	
Calibration	Automatic 3-point calibration	
Minimum filling volume of the cell	15 ml	

8 Accessories and options

8.1 WTW accessories

Description	Model	Order no.
LabStation with PC software LSdata, battery pack and universal power pack	LS Flex/430	251 301
Accumulator with power packTurb 430 IR/T	pHotoFlex BB	251 300
3 replacement cells, 28 x 60 mm	LKS28-Set	251 302
Calibration set for Turb 430 IR	Kal.Kit Turb 430 IR	600 560
Calibration set for Turb 430 T	Kal.Kit Turb 430 T	600 561
Thermoprinter*	P3002	250 045

* A connection cable is required to connect the printer (see section 8.1.1)

8.1.1 Connecting cable

PC You can connect a PC (USB or serial COM interface) to the Turb 430 IR/T in one of the following ways:

Description	Model	Order no.
Connection PC - Turb 430 IR/T		
– Cable	AK 540/B	902 842
+ USB adapter (for USB connection on PC)	Ada USB	902 881
Connection PC - LabStation		
– Zero modem cable	included in the scope of delivery of the LabStation	
+ USB adapter (for USB connection on PC)	Ada USB	902 881

Thermoprinter

You can connect the P3001 to the Turb 430 IR/T in the following ways:

Description	Model	Order no.
Connection P3001 - Turb 430 IR/T		
– Cable	AK 540/S	902 843
Connection P3001 - LabStation		
– Cable	AK 3000	250 745
in conjunction with an adapter (socket - socket) [GenderChanger]	Specialist shops	
or:		
– Cable, 2 x 9-pin (socket - plug)	Specialist shops	

9 Firmware update

General information

With the "Firmware Update Turb430" program you can update the firmware of the Turb 430 IR/T to the latest version with the aid of a PC.

A free serial interface (COM port) on your PC and an interface cable is required for this (see chapter 8 ACCESSORIES AND OPTIONS).



Prior to starting the update please make sure that the batteries are fully loaded, or operate the Turb 430 IR/T with the LabStation or with the power pack. Otherwise there is the risk of the Turb 430 IR/T crashing during the update.

Program installation

Install the firmware update program on your PC with the "Turb430_Vx-_yy_English.exe" installation program.

Program start

Start the "Firmware Update Turb430" program from the WTW directory in the Windows start menu. The program automatically selects the first free serial interface (COM port). The selected interface is displayed on the left side of the status line on the screen bottom.

Via the language menu you can change the adjusted language.

Firmware update

Proceed as follows:

1. With the aid of an interface cable, connect the Turb 430 IR/T to the serial interface (COM port) of the PC named in the status line.
2. Make sure the Turb 430 IR/T is switched on.
3. To start the updating process click the OK button.
4. Then follow the instructions of the program.
   During the programming process, a corresponding message and a progress bar (in %) appear.
   The programming process takes approx. four minutes.
   A terminatory message is displayed after a successful programming process. The firmware update is now completed.
5. Disconnect the meter from the PC.
   The meter is ready for operation.

After switching the meter off and on you can check whether the meter has taken over the new software version on the start display.

10 Disposal

Handle and dispose of all waste in compliance with local laws and regulations.

EU only: Correct disposal of this product — WEEE Directive on waste electrical and electronic equipment

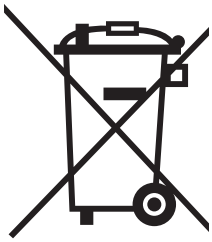

This marking on the product, accessories or literature indicates that the product should not be disposed of with other waste at the end of its working life.

To prevent possible harm to the environment or human health from uncontrolled waste disposal, please separate these items from other types of waste and recycle them responsibly to promote the sustainable reuse of material resources.



Waste from electrical and electronic equipment can be returned to the producer or distributor.

EU only: Correct disposal of batteries in this product

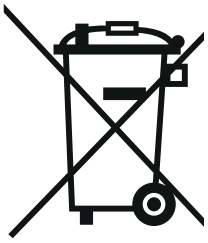

This marking on the battery, manual or packaging indicates that the batteries in this product should not be disposed of with other waste at the end of its working life. Where marked, the chemical symbols Hg, Cd or Pb indicate that the battery contains mercury, cadmium or lead above the reference levels in Directive 2006/66/EC. If batteries are not properly disposed of, these substances can cause harm to human health or the environment.

To protect natural resources and to promote material re-use, please separate batteries from other types of waste and recycle them through your local, free battery return system.

11 Lists

This chapter provides additional information and orientation aids.

Abbreviations

The list of abbreviations explains the indicators and the abbreviations that appear on the display and in the manual.

Specialist terms

The glossary briefly explains the meaning of the specialist terms. However, terms that should already be familiar to the target group are not described here.

Abbreviations

Cal	Calibration
d	Day
h	Hour
j	Year
LoBat	Batteries almost empty (Low battery)
m	Month
s	Second
S	Slope (internat. k)
SELV	Safety Extra Low Voltage
Slp.	Slope determined with calibration

Glossary

Resolution Smallest difference between two measured values that can be displayed by a meter.

Adjusting To manipulate a measuring system so that the relevant value (e.g. the displayed value) differs as little as possible from the correct value or a value that is regarded as correct, or that the difference remains within the tolerance.

Calibration Comparing the value from a measuring system (e. g. the displayed value) to the correct value or a value that is regarded as correct. Often, this expression is also used when the measuring system is adjusted at the same time (see adjusting).

Cell Vessel that takes a liquid sample for measurement.

LED Light Emitting Diode
LEDs are used as the light source in the Turb 430 IR/T.

Measuring system The measuring system comprises all the devices used for measuring, e. g. measuring instrument and probe. In addition, there is the cable and possibly an amplifier, terminal box and armature.

Measured parameter The measured parameter is the physical dimension determined by measuring, e. g. pH, conductivity or DO concentration.

Test sample Designation of the test sample ready to be measured. Normally, a test sample is made by processing the original sample. The test sample and original sample are identical if the test sample was not processed.

Measured value The measured value is the special value of a measured parameter to be determined. It is given as a combination of the numerical value and unit (e. g. 3 m; 0.5 s; 5.2 A; 373.15 K).

Molality Molality is the quantity (in Mol) of a dissolved substance in 1000 g solvent.

Reset Restoring the original condition of all settings of a measuring system.

Standard solution The standard solution is a solution where the measured value is known by definition. It is used to calibrate a measuring system.

12 Index

A

Air 19
Automatic switch-off function 13

C

Calibration 29
Calibration points and measuring ranges ...29
Cleaning 46
Connecting sensors 8
Connectors 8

D

Data filter 34
Data memory 24
Dataset 33
Date and time 22, 26
Default settings
    System settings 41
    Turbidimeter 42
Display 8, 25
Display illumination 8

F

Filter 34
Firmware update 53

I

Initial commissioning 15
Initialize 41
Inserting a cell 16
Interface 26

K

Keys 7

M

Measured value display 19
Measurement data memory 33
Measurement dataset 33
Measuring range exceeded 28
Menus (navigation) 19
Messages 20

N

Navigation 19

O

Operating modes 19

P

Power pack 12

R

Rechargeable battery
    Charging time 12
Reset 41
RS232 socket assignment 39

S

Safety 10
Scope of delivery 12
Storing in memory 33
Switching on 16
System settings 24

T

Turbidity 27

Xylem |ˈzīləm|

1) The tissue in plants that brings water upward from the roots;
2) a leading global water technology company.

We're a global team unified in a common purpose: creating advanced technology solutions to the world's water challenges. Developing new technologies that will improve the way water is used, conserved, and re-used in the future is central to our work. Our products and services move, treat, analyze, monitor and return water to the environment, in public utility, industrial, residential and commercial building services settings. Xylem also provides a leading portfolio of smart metering, network technologies and advanced analytics solutions for water, electric and gas utilities. In more than 150 countries, we have strong, long-standing relationships with customers who know us for our powerful combination of leading product brands and applications expertise with a strong focus on developing comprehensive, sustainable solutions.

For more information on how Xylem can help you, go to www.xylem.com.

Service and Returns:
Xylem Analytics Germany
Sales GmbH & Co. KG
WTW
Am Achalaich 11
82362 Weilheim
Germany

Tel.: +49 881 183-325
Fax: +49 881 183-414
E-Mail wtw.rma@xylem.com
Internet: www.xylemanalytics.com

Xylem Analytics Germany GmbH
Am Achalaich 11
82362 Weilheim
Germany