Bell & Gossett
xylem

Submittal
A-326.2L

Job: **Representative:**

Unit tag: _____ Order number: _____ Date: _____
Engineer: _____ Submitted by: _____ Date: _____
Contractor: _____ Approved by: _____ Date: _____



Rolairtrol®

Air separator

Flanged less strainer air control and elimination

Description

The Rolairtrol air separator is an ASME vessel designed with tangential openings to create a low velocity vortex where air is separated and removed from the circulating water.

- **Maximum working pressure:** 125 PSIG (862 kPa)
- **Temperature adjustment range:** -20°F (-29°C) to +350°F (177°C)

Materials of construction

- **Designed and constructed per ASME Section VIII, Division 1**
- **Shell:** Carbon steel

Consult factory for higher working pressures and temperatures.

Schedule

Part number	Model number	Capacity	Flanged tangential opening	Tagging information	Quantity
		GPM (m^3/hr)	in. (mm.)		
5363-14F-12-001	RL-14F	6,100 (1,385)	14 (356)		
5363-16F-12-001	RL-16F	8,000 (1,819)	16 (406)		
5363-14F-12-002	RL-14FB	6,100 (1,385)	14 (356)		
5363-16F-12-002	RL-16FB	8,000 (1,819)	16 (406)		
5363-18F-12-002	RL-18FB	9,700 (2,203)	18 (457)		
5363-20F-12-002	RL-20FB	12,000 (2,725)	20 (508)		
5363-22F-12-002	RL-22FB	15,000 (3,406)	22 (589)		
5363-24F-12-002	RL-24FB	17,000 (3,860)	24 (635)		
5363-30F-12-002	RL-30FB	24,235 (5,505)	30 (762)		
5363-36F-12-002	RL-36FB	34,900 (7,926)	36 (914)		

Model numbers with a B suffix include bracket supports.

Dimensions and weights

Model number	A	B	C	D	E	F	G	H	J	Cv	Approx. volume	Approx. shipping weight	Flooded weight
	in. (mm.)										gallons (ltrs.)	lbs. (kgs.)	
RL-14F (B)	92-1/8 (2,340)	31-1/2 (800)	34-3/4 (883)	25-7/8 (657)	42 (1,067)	54-1/2 (1,384)	14 (356)	2 (51)	3 (76)	3,900	472 (1,787)	1,300* (590)	5,300* (2,404)
RL-16F (B)	104 (2,642)	36 (914)	37-3/4 (959)	30-1/4 (768)	48 (1,219)	62-1/2 (1,588)	16 (406)	2 (51)	3 (76)	5,100	723 (2,737)	2,200* (1,000)	8,250* (3,742)
RL-18FB	125-7/8 (3,197)	40-1/2 (1,029)	47-5/8 (1,210)	37-3/4 (959)	54 (1,372)	70-1/4 (1,784)	18 (457)	2 (51)	3 (76)	6,410	1,149 (4,349)	3,200 (1,450)	12,610 (5,720)
RL-20FB	135-1/2 (3,442)	45 (1,143)	48-5/8 (1,235)	41-7/8 (1,064)	60 (1,524)	78 (1,981)	20 (508)	2 (51)	3 (76)	8,000	1,577 (5,969)	4,750 (2,155)	17,910 (8,124)
RL-22FB	148-1/8 (3,762)	49-5/8 (1,260)	52-3/4 (1,340)	45-3/4 (1,162)	66 (1,676)	85-7/8 (2,181)	22 (559)	2 (51)	3 (76)	10,000	1,958 (7,411)	5,900 (2,675)	22,050 (10,002)
RL-24FB	159-3/8 (4,048)	54 (1,372)	56-1/8 (1,426)	49-1/4 (1,251)	72 (1,829)	93-1/2 (2,375)	24 (610)	2 (51)	3 (76)	11,700	2,463 (9,322)	6,850 (3,105)	27,300 (12,383)
RL-30FB	200-3/4 (5,100)	66 (1,676)	75-1/8 (1,908)	59-5/8 (1,514)	90 (2,286)	112 (2,845)	30 (762)	2 (51)	3 (76)	18,750	6,250 (23,658)	15,250 (6,918)	62,875 (28,520)
RL-36FB	239-3/4 (6,090)	81 (2,057)	85-3/4 (2,178)	73 (1,854)	108 (2,743)	140 (3,556)	36 (914)	2 (51)	3 (76)	25,800	9,125 (34,542)	21,500 (9,750)	97,475 (44,215)

**Weight does not include support brackets. Please add weights from table below for models with brackets.*

Important note: Dimensions are not to be used for construction.

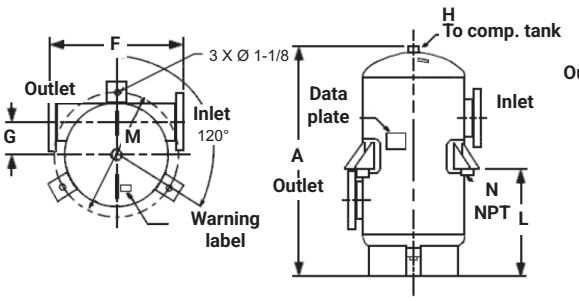

14" thru 36" models less strainer with support brackets

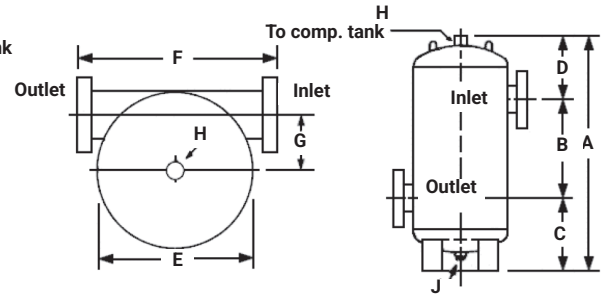

14" & 16" models less strainer

Model number	L	M	N	Weights of brackets
	in. (mm.)			lbs. (kgs.)
RL-14FB	48 (1,219)	49 (1,245)	3 (76)	56 (25)
RL-16FB	50 (1,270)	54-1/2 (1,384)	3 (76)	120 (54)
RL-18FB	61-5/8 (1,565)	60-5/8 (1,340)	3 (76)	N/A
RL-20FB	68-5/8 (1,743)	67-3/4 (1,720)	4 (102)	N/A
RL-22FB	74-1/8 (1,883)	73-3/4 (1,875)	4 (102)	N/A
RL-24FB	80-3/8 (2,042)	79-3/4 (2,025)	4 (102)	N/A
RL-30FB	103 (2,616)	98-3/4 (2,508)	4 (102)	N/A
RL-36FB	122 (3,100)	116-3/4 (2,965)	4 (102)	N/A

Support notes

1. Consult IOM A85524 for safety and service instructions.
2. Lifting lugs are for the transportation and installation of the empty vessel, and are not to be used for complete or partial support of the flood vessel.
3. Welding to the pressure vessel boundary will void the ASME stamp.
4. Factory welded support brackets are included on sizes 18" and above. Optional factory welded support brackets are strongly recommended for sizes 14" and above.
5. Flanged connections for field piping drilled and faced per 150# ANSI standards.

Model numbering

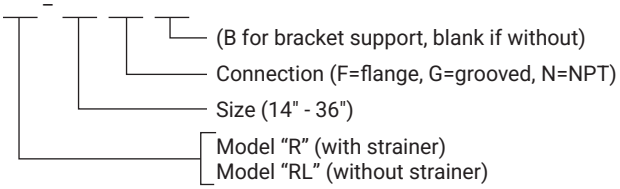

Performance chart

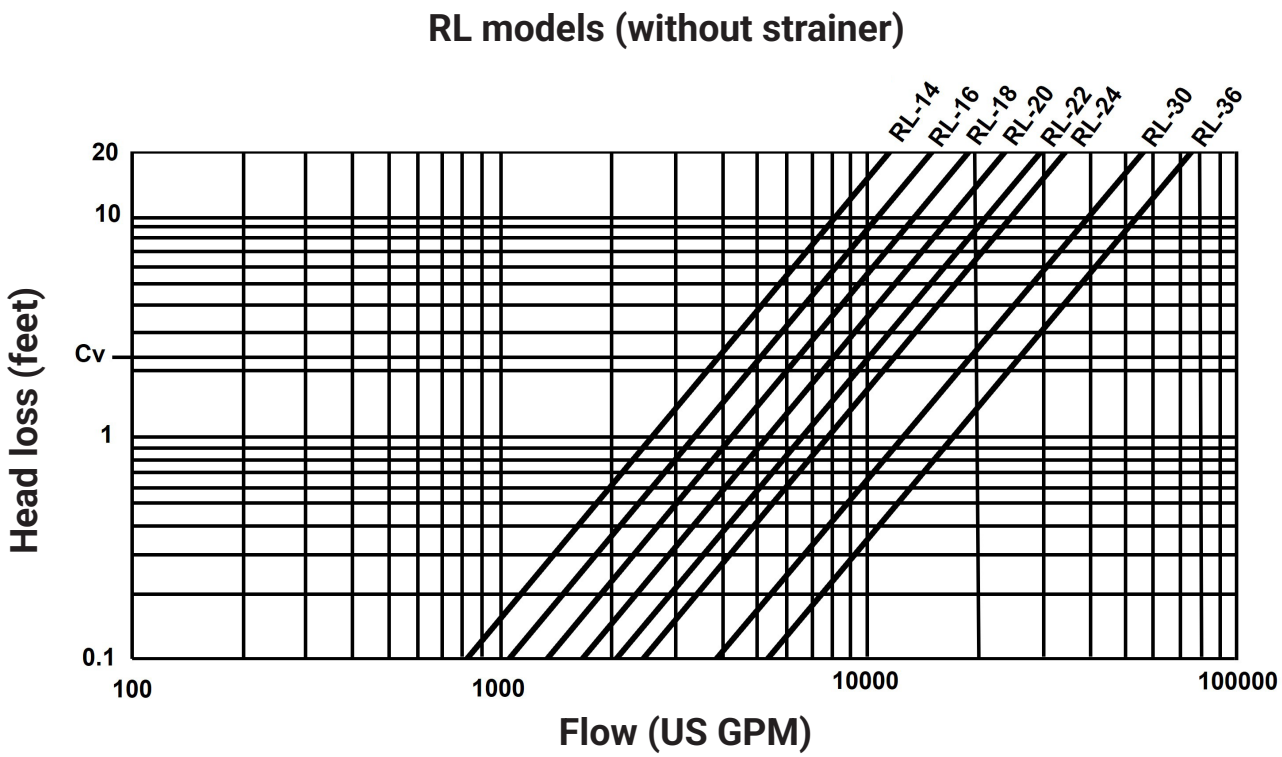

Note: Pressure drops for a range of flow are indicated on this chart. Users should select Rolairtrol using Bell & Gossett published capacity guidance, and ASHRAE pipe sizing recommendations for optimal performance.

Typical Rolairtrol specifications

Furnish and install, as shown on plans, a centrifugal type air separator. The unit shall have _____" inlet and outlet flanged connections tangential to the vessel shell. The unit shall have an NPT air vent connection at top of unit.

A blowdown connection shall be provided to facilitate routine cleaning. Specify Bell & Gossett Model MBV-1 Rolairtrol accessory with appropriate fittings for manual blowdown.

Vessel shell diameter to be three times the nominal inlet/outlet pipe diameter, with a minimum vessel volume for sufficient velocity reduction.

Refer to submittal A-329 for information on the MBV-1 manual blowdown valve.

The air separator must be designed, constructed and stamped for 125 PSIG @ 350°F (862 kPa @ 177°C) in accordance with Section VIII, Division I of the ASME Boiler and Pressure Vessel Code, and registered with the National Board of Boiler and Pressure Vessel Inspectors. The air separator(s) shall be painted with one shop coat of light gray air dry enamel.

Each air separator shall be Bell & Gossett Model no. _____ Rolairtrol air separator for _____ GPM (_____ m^3), shell dia. _____" (_____ mm) and min. vessel volume _____ gal (_____ liters).

Notes

Learn more about Rolairtrol air separators

This information is subject to change without notice. All information presented herein is believed reliable and in accordance with accepted engineering practices. Xylem makes no warranties as to the completeness of this information. Users are responsible for evaluating individual product suitability for specific applications. Xylem assumes no liability whatsoever for any special, indirect or consequential damages arising from the sale, resale or misuse of its products.

© 2026 Xylem Inc. or its affiliates. All rights reserved. Xylem and Bell & Gossett are registered trademarks of Xylem Inc. or one of its subsidiaries. All other trademarks or registered trademarks are the property of their respective owners.

A-326.2L 8/2026

xylem
Let's Solve Water