Elsag Bailey
Process Automation

Hartmann & Braun
Instrumentation
Heiligenhaus

Operating Instructions

LineMaster 100

Continuous-line Recorder

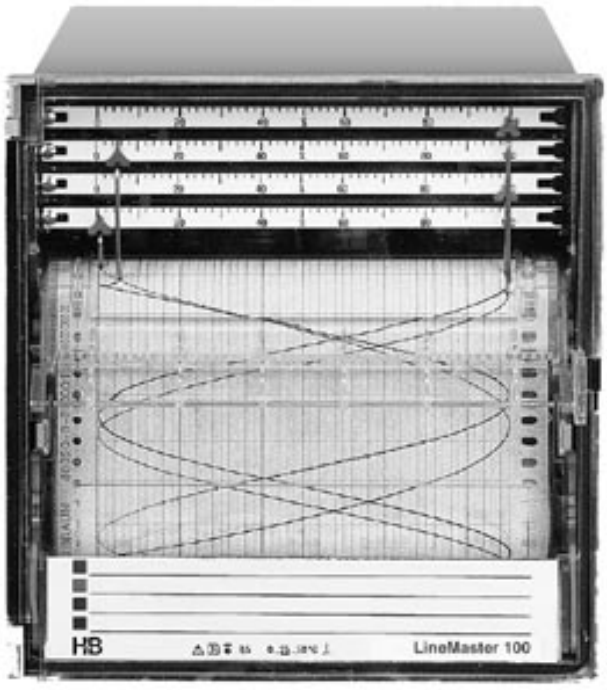

42/43-31-1 EN

Table of Contents

Page

Short description 2

Installation and Commissioning

Scope of delivery 3
1. Mounting location 3
2. Mounting 4
3. Connecting the instrument 5
   Connecting the input signal 5
   Connecting the power supply 5
4. Fitting the chart 6
   Chart unit for roll chart 6
   Chart unit for fanfold chart 7
5. Fitting the fibre pen 7
6. Switching on the unit 8
7. Positioning the chart 8

Operation

Removing the chart 9
Withdrawing chart paper from take-up roll 9
Changing the chart speed 10
Selecting the response time 11

Retrofitting

Changing measuring ranges 12
Adjusting the zero and balancing the span 13
Replacing scales 14
Replacing the measuring point name plate 14

Maintenance

Replacing fuses 15

Appendix

Technical data 16
Packing instructions 18

Important Instructions for Your Safety.

Please read and observe.

Correct and safe operation of the unit calls for appropriate transportation and storage, expert installation and commissioning as well as correct operation and meticulous maintenance.

Only those persons conversant with the installation, commissioning, operation and maintenance of similar unites and who possess the necessary qualifications are allowed to work on the unit.

Please take note of the contents of this Operating Manual and the safety regulations affixed to the unit.

The directives, norms and guidelines mentioned in this Operating Manual are applicable in the Federal Republic of Germany. When using the units in other countries, please observe the national regulations prevailing in the respective country.

The unit has been designed and tested in accordance with DIN EN 61 010-1 “Safety requirements for electronic measuring apparatuses”, and has been supplied in a safe condition. In order to retain this condition and to ensure safe operation, the safety instructions in this Operating Manual bearing the headline “Caution” must be observed. Otherwise, persons can be endangered and the unit itself as well as other equipment and facilities can be damaged.

If the information in this Operating Manual should prove to be insufficient in any point, the Hartmann & Braun Service Department will be delighted to give you more information.

Depiction of reference symbols in the text

<Key> Inscription of the keys on the display and operator control unit.

The indications “right”, “left”, “top” or “bottom” imply that the viewer is looking at the front panel of the instrument unless stated otherwise.

Short description

The LineMaster 100 is a microprocessor-controlled continuous-line recorder with 1 to 4 line channels.

The recorder is connected to the transmitter and is to be used for measuring process signals. The measuring channels are electrically separated from each other and unearthed.

Installation and Commissioning

Scope of delivery

(see Fig. 1)

The recorder is supplied with the following:
- 1 operating manual
- 2 mounting brackets *Be*
- 1 fibre pen *Fe* for each measuring channel
- pack of fanfold chart *Fp* or 1 roll chart *Sr*
- Depending on the order the corresponding number of screw-plug terminals *Sk* and ruler(s).

1. Mounting location

Mounting orientation
Lateral −30 °...0...+30°
Inclination backwards 20°,
Inclination forwards 20°

Note ambient temperature
0...50 °C

Relative humidity
≤ 75 % annual average. Max. relative humidity ≤ 85 % during operation. Avoid condensation.

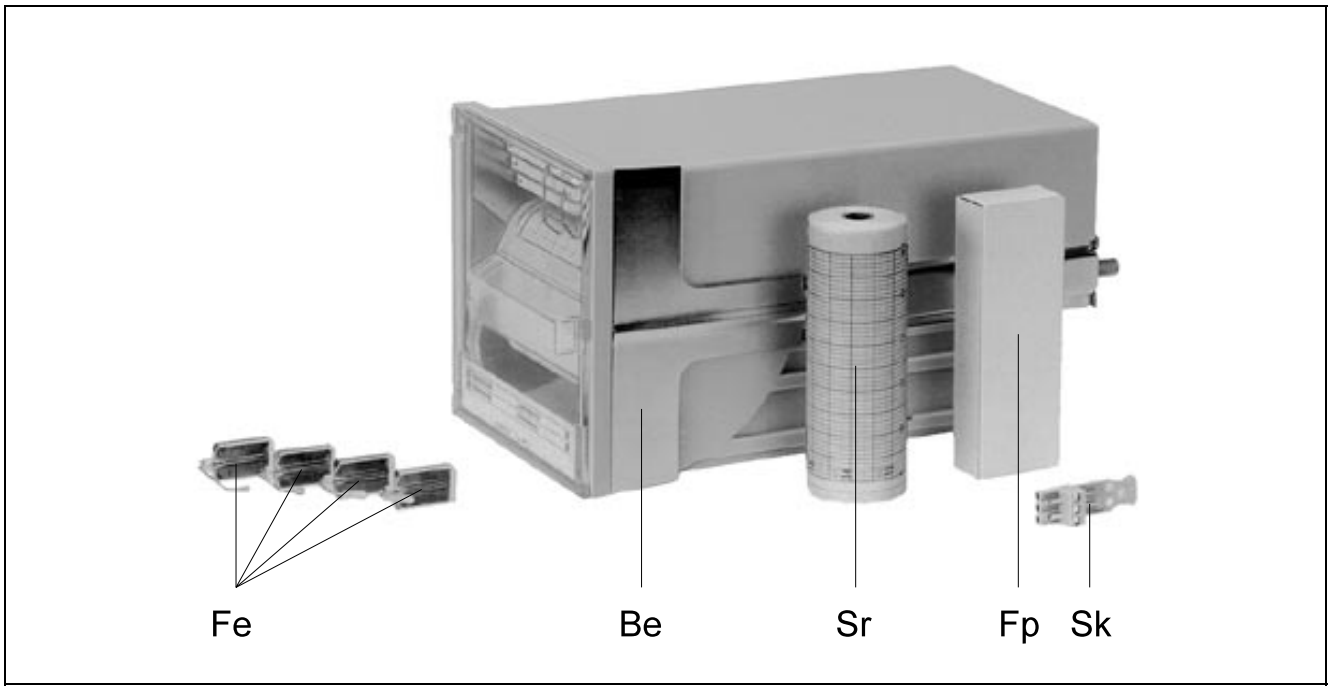

Fig. 1 Scope of delivery
Be Mounting brackets
Fe Fibre pens
Fp Fanfold chart
Sk Screw-plug terminals
Sr Roll chart

2. Mounting

(see Figs. 2 and 3)

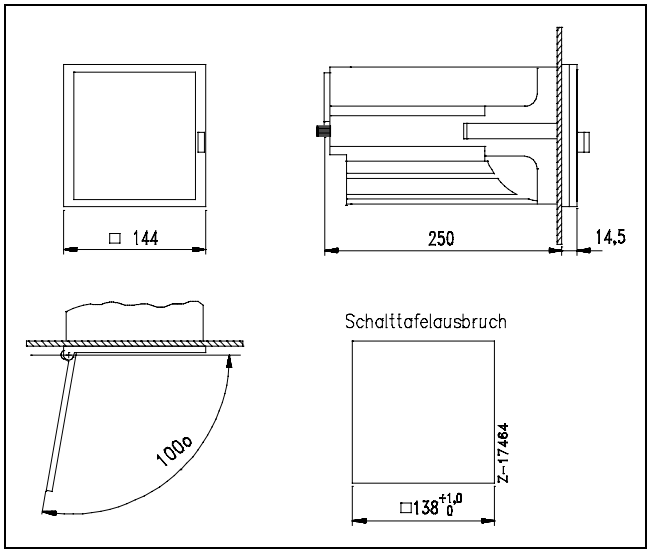

Fig. 2 Dimensional drawing (dimensions in mm)

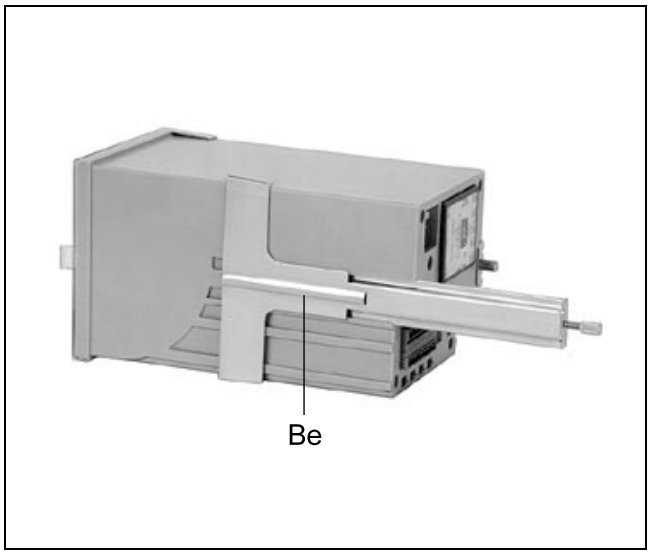

Fig. 3 Mounting the brackets
Be Mounting bracket

Mounting in panels

1. Fit the instrument into the panel from the front.
2. Fit mounting brackets *Be* laterally into the fitting notches on the case (see Fig. 3).

   Note
   The mounting brackets *Be* are designed for close-packed horizontal and vertical mounting.
3. Align the mounting brackets *Be* vertically and tighten them equally.

Mounting in rack

1. Fasten 4 centering brackets (Catalogue No. 92204-4-0457301) to the rack.
2. Fit mounting brackets *Be* laterally into the fitting notches on the case (see Fig. 3).
3. Align the mounting brackets *Be* vertically and tighten them equally.

3. Connecting the instrument

(see Fig. 4)

⚠ Caution

Before all other connections are made the protective ground terminal must be connected to a protective conductor.

The unit can be dangerous if the protective conductor is interrupted inside or outside the unit or if the protective ground terminal is disconnected.

The unit may only be operated when properly installed.

Install a mains switch, with adequate switching capacity, within the reach of the mounting site so that the unit can be disconnected at all poles from the mains. The protective action of the protective conductor must not be negated.

- The current signals are connected at terminals 0.1 (−) and 0.2 (+).
- The voltage signals are connected at terminals 0.1 (−) and 0.3 (+).

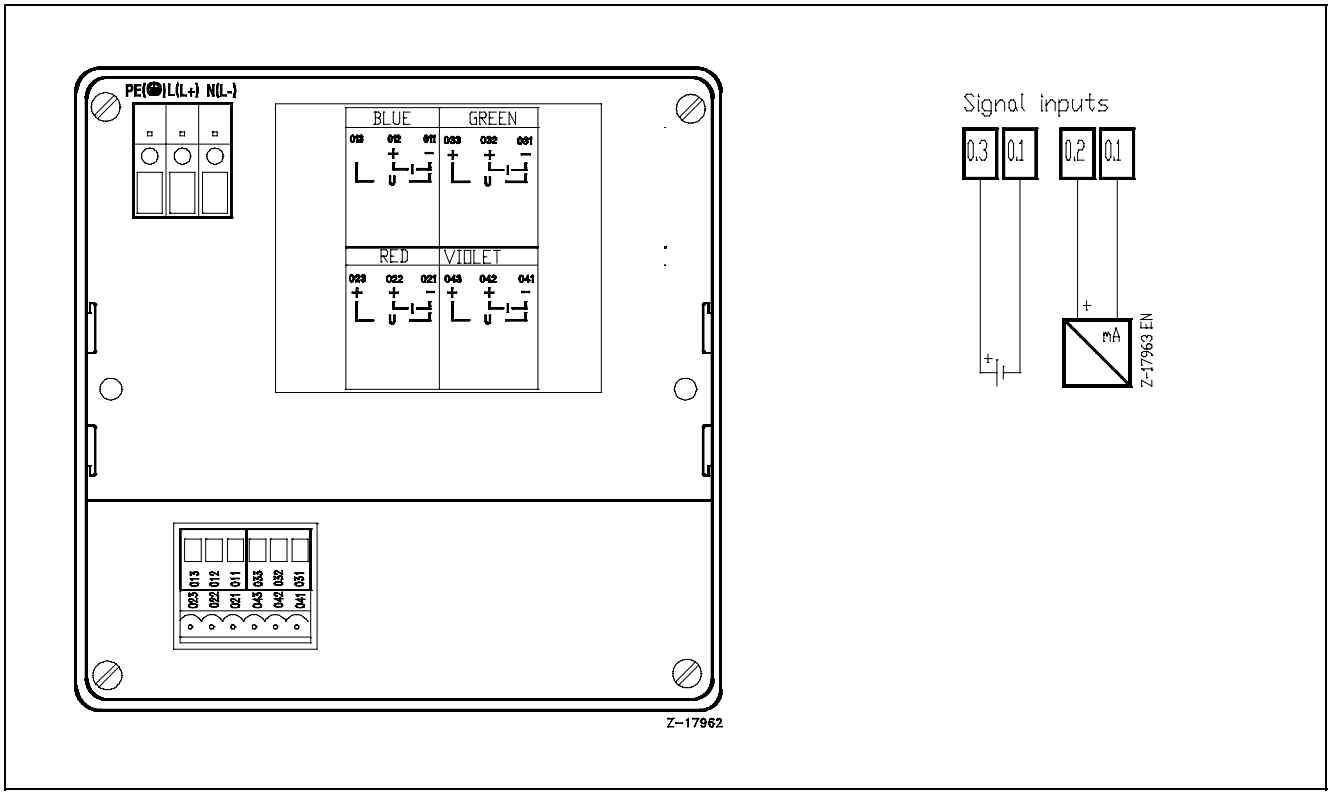

Fig. 4 Back panel and screw-plug terminals

Connecting the input signal

- Fasten signal lines (max. cross section 2 x 1 mm²) at the screw-plug terminals.

Connecting the power supply

- Fasten power supply lines (max. cross section 1 x 4 mm² or 2 x 1.5 mm²) at the screw-plug terminals. The cross section of the protective conductor must at least be equal to the cross section of the power supply line.

4. Fitting the chart

Chart unit for roll chart

(see Figs. 5 and 6)

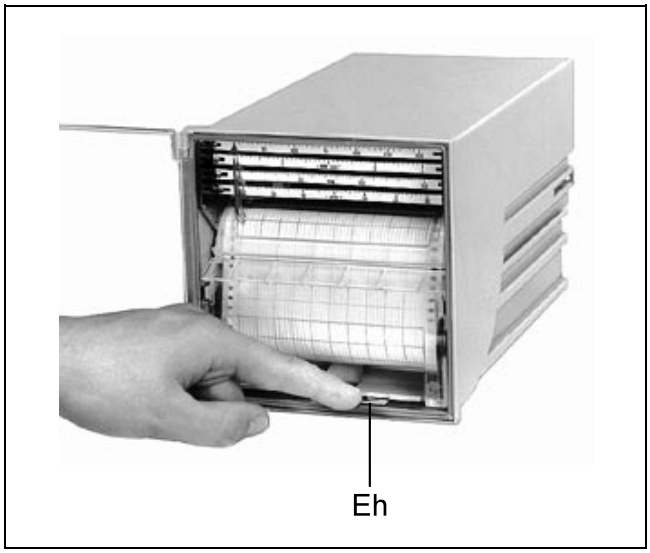

Fig. 5 Unlocking the chart unit
Eh Unlocking lever

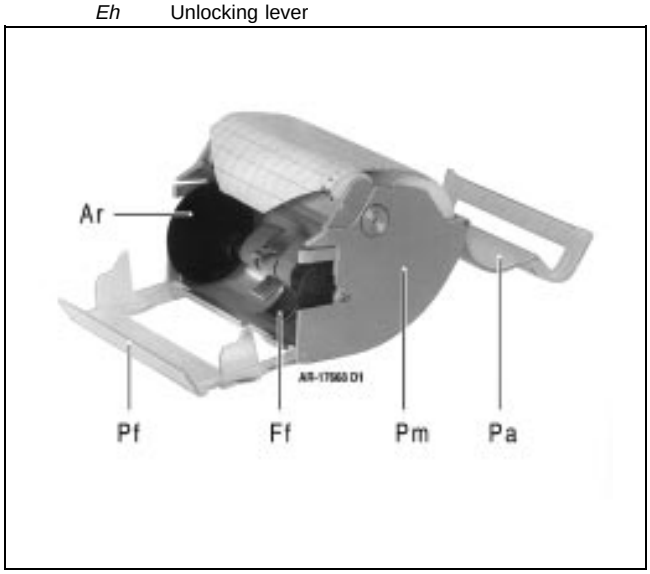

Fig. 6 Chart unit for roll chart
Ar Take-up roll
Ff Guide spring
Pa Pressure plate flap
Pf Chart guide flap
Pm Chart storage recess

1. Unlock chart unit: Press unlocking lever *Eh* (see Fig 5). Chart unit swings forwards. Remove chart unit in the direction of the arrow.
2. Open out pressure plate flap *Pa*.
3. Insert roll chart into the chart storage recess *Pm.*
4. Pull the chart beginning forwards to the sprocket wheel and engage the perforation with the sprocket wheel, making sure that the chart is parallel to the sprocket wheel.
5. Close the pressure plate flap *Pa*.
6. Open out the chart guide flap *Pf*.
7. Fit take-up roll *Ar* if necessary.
8. Close the chart guide flap *Pf*.
   Note
   Having installed the chart unit in the recorder, the chart unit winds itself automatically onto the take-up roll.
9. Fit chart unit in the chassis until it engages.

Chart unit for fanfold chart

(see Figs. 5, 6, and 7)

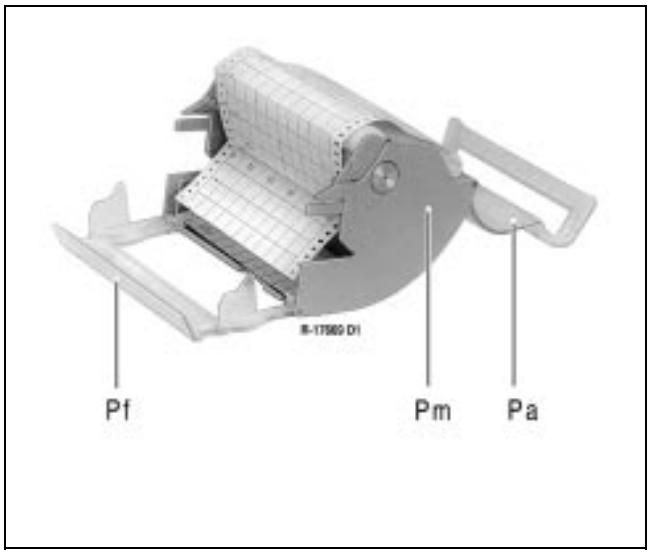

Fig. 7 Chart unit for fanfold chart
Pa Pressure plate flap
Pf Chart guide flap
Pm Chart storage recess

Remove the guide spring *Ff* and Take-up roll *Ar* when converting the roll chart unit to the fanfold chart (see Fig. 6).

1. Unlock chart unit: Press unlocking lever *Eh* (see Fig 5). Chart unit swings forwards. Remove chart unit in the direction of the arrow.
2. Open out pressure plate flap *Pa*.
3. Insert roll chart into the chart storage recess *Pm*.
4. Open out the chart guide flap *Pf*.
5. Pull the chart beginning forwards to the sprocket wheel and engage the perforation with the sprocket wheel. Two fanfold sheets must rest in the tray. Make sure that the chart is parallel to the sprocket wheel.
6. Close the pressure plate flap *Pa*.
7. Close the chart guide flap *Pf*.
8. Fit chart unit in the chassis until it engages.

5. Fitting the fibre pen

(see Fig. 8)

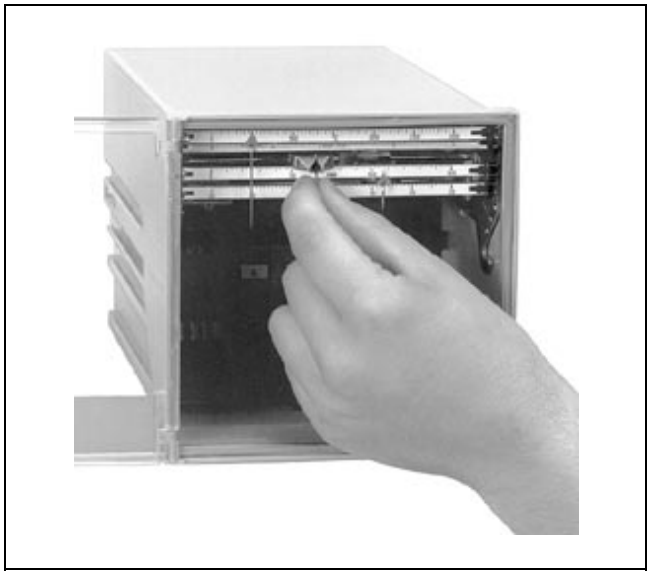

Fig. 8 Fitting the fibre pen

1. Push scales upwards.
2. Fit fibre pen acc. to Fig. 8.

6. Switching on the unit

⚠ Caution

Before switching on, make sure that the operating voltage of the unit (see rating plate) corresponds to the voltage of the power supply.

Install a mains switch, with adequate switching capacity, within the reach of the mounting site so that the unit can be disconnected at all poles from the mains. The protective action of the protective conductor must not be negated.

7. Positioning the chart

(see Fig. 9)

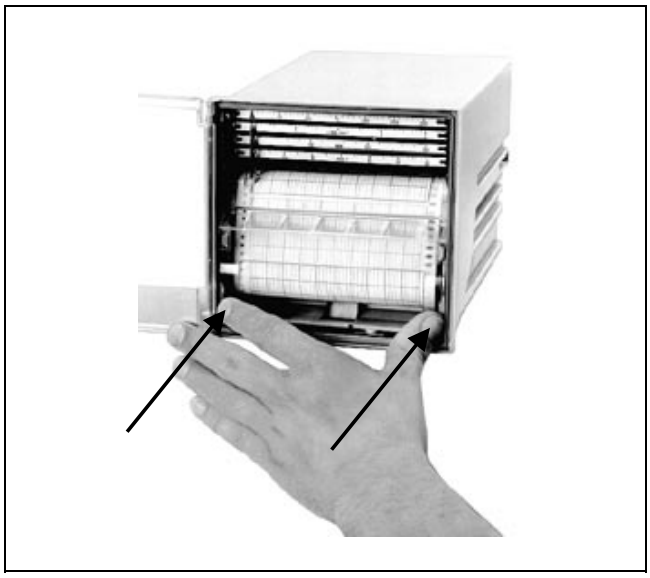

Fig. 9 Positioning the chart

1. Press the lower handle strips of chart unit towards the back. The chart is transported faster downwards.
2. Let go the handle strips once the green baseline has been reached.

Operation

Removing the chart

(see Fig. 10)

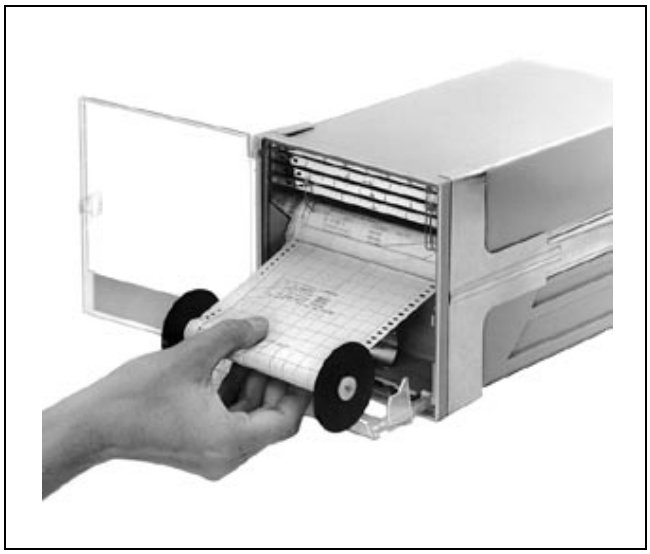

Fig. 10 Removing the chart

The chart unit can remain in the unit when removing the chart.

Chart unit for chart

1. Open the chart guide flap downwards.
2. Remove take-up roll.
3. If necessary, tear off the chart at the perforation.

Chart unit for fanfold chart

1. Open the chart guide flap downwards.
2. Remove the fanfold pack.
3. If necessary, tear off the chart at the fold.

Note
Two fanfold sheets must rest in the tray.

Withdrawing chart paper from take-up roll

(see Fig. 11)

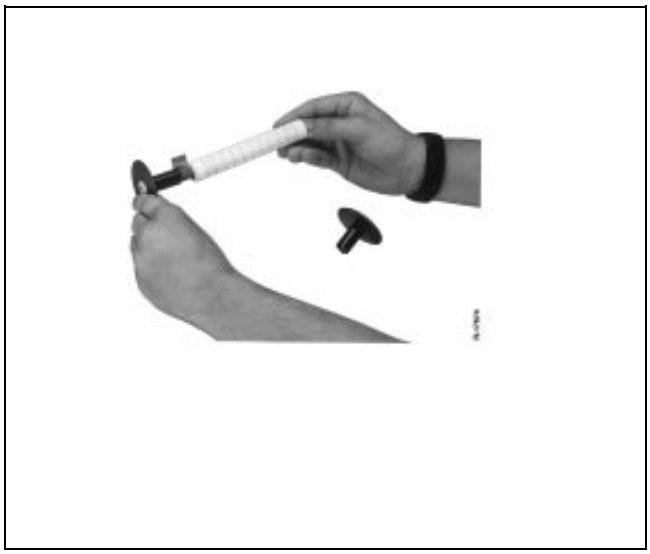

Fig. 11 Withdrawing chart from take-up roll

1. Rotate flange without drive pinion by 45° and pull from take-up roll.
2. Hold chart as shown in Fig. 11 and remove from axis.
3. Replace right flange and secure by rotating by 45°.
4. Fit take-up roll into chart unit. The drive pinion must be on the right hand side.
5. Close chart guide flap.

Changing the chart speed

The chart speed can be changed with keys A, B and C of the display and operator control unit. The assigned LEDs are switched on and off with these keys. The combination of LED - states indicate that the chart speed is active.



Fig. 12 Changing the chart speed
(see keys A, B and C of the display and operator control unit)

Legend

A	Key
⊗	LED off
●	LED on

1. Unlock the chart unit: Press unlocking lever *Eh* downwards (see Fig. 5). Chart unit swings forwards.
2. Remove the chart unit.
3. Select chart speeds with keys A, B and C.

A	B	C	
⊗	⊗	⊗	0/1 mm/h
⊗	⊗	●	5 mm/h
⊗	●	⊗	10 mm/h
⊗	●	●	20 mm/h
●	⊗	⊗	60 mm/h
●	⊗	●	120 mm/h
●	●	⊗	300 mm/h
●	●	●	600 mm/h

The basic setting for the chart speed is 20 mm/h.

4. Replace chart unit.

Selecting the response time

The response time of the measuring elements can be selected for each channel. The response time is defined as the time which the measuring system requires to travel from 10% to 90% of scale length in case of step-shaped change of the measured signal from 0 % to 100 %.

The adjusting action of recorder is linear. On selecting the response time the rotational speed of the system motor changes.



Fig. 13 Selecting the response time
(see keys A, B and C of the display and operator control unit)

Legend

A	Key
⊗	LED off
●	LED on
◪	LED flashes slowly
◩	LED flashes rapidly

1. Unlock the chart unit: Push the unlocking lever *Eh* downwards (siehe Bild 5). Chart unit springs forward.
2. Remove chart unit.
3. Press keys A and C of the display and operator control unit simultaneously.
   − LED above key A flashes slowly.

Selecting channel

A	B	C	
◪	⊗	⊗	violet channel
◪	⊗	●	blue channel
◪	●	⊗	red channel
◪	●	●	green channel

4. Select measuring channel with keys B and C.
5. Press again key A of the display and operator control unit.
   − LED above key A flashes rapidly.
6. Select response time with keys B and C. The following response times can be selected:

A	B	C	
◩	⊗	⊗	2 s
◩	⊗	●	5 s
◩	●	⊗	20 s
◩	●	●	60 s

The basic setting of the response time is 2 secs. for all channels.

7. Press key A.
   − the selected response time is saved. The LED above key A flashes slowly.
8. Select the next channel. Repeat steps 4 and 5.
9. Press keys A and C simultaneously. The LEDs indicate the active chart speed.
10. Replace chart unit.

Retrofitting

Changing measuring ranges

The recorder is delivered with 2 measuring range settings.

1. 0...20 mA / 0...10 V for all channels
2. 4...20 mA for all channels

In the case of measuring range changeover (from 1. to 2.) the hardware must be matched using plug-in jumpers:

Hardware matching with plug-in jumpers

(see Figs. 14 to 15)

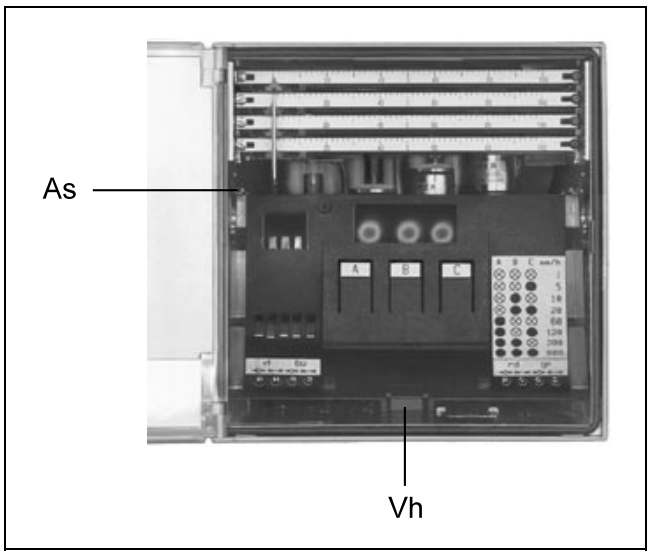

Fig. 14 *As* Retaining screw
Vh Locking lever

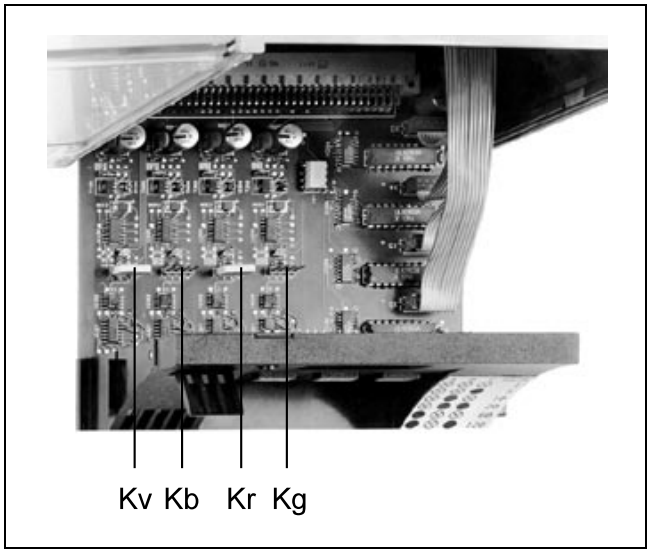

Fig. 15 Pulled out EC unit
Arrangement of plug-in jumpers and their channel assign.
Kg green channel
Kr red channel
Kb blue channel
Kv violet channel

Pulling forwards the EC unit.

1. Unlock the chart unit: press unlocking lever *Eh* downwards (see Fig. 5). Chart unit swings forwards.
2. Remove chart unit.
3. Lift the locking lever *Vh* (see Fig. 14) and simultaneously pull forward the module.
4. Pull out the EC unit as far as possible so that the plug-in jumpers become easily accessible (see Fig. 15).
5. Plug in jumpers for measuring ranges 0...20 mA and 0...10 V. Remove jumpers for measuring range 4...20 mA.
6. Push in the EC unit.
7. Replace chart unit.

Adjusting the zero and balancing the span

(see Fig. 16)

Two potentiometers each (below left) are accessible in the display and operator control unit for the violet and blue channels.

Two potentiometers each (below right) are accessible in the display and operator control unit for the red and green channels.

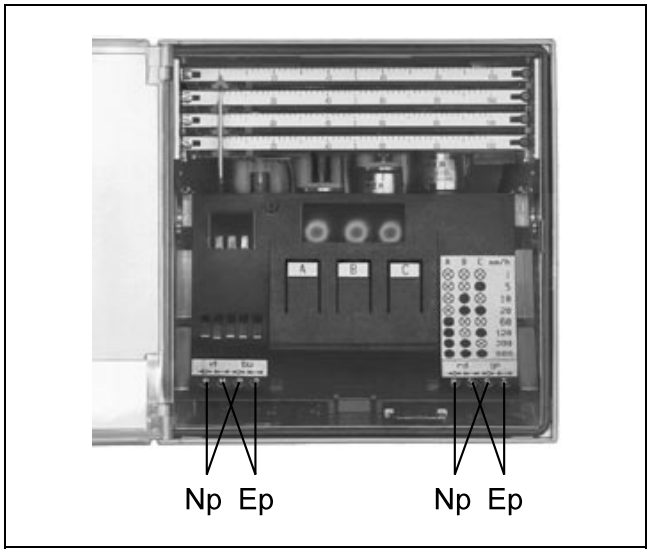

Fig. 16 Display and operator control unit with potentiometers

The left potentiometer is used to balance the zero setting, and the right potentiometer to balance the span (see Fig. 16). For setting the zero, a bipolar current or voltage is required.

1. Connect power supply of recorder and switch on.
2. Connect sensor and supply the lower range value.
3. Set recording tip to zero reference line of paper using current voltage source.
4. Adjust scale pointer to the initial value.
5. Set current voltage source to lower range value.
6. Unlock chart unit: Push unlocking lever *Eh* downards (see Fig. 5). Chart unit swings forwards.
7. Remove chart unit.
8. Use zero potentiometer to set tip of indicator to the start of scale.
9. Predefine measuring range final value with current voltage source.
10. Use final value potentiometer to set end of scale.
11. Replace chart unit.

Replacing scales

(see Fig. 17)

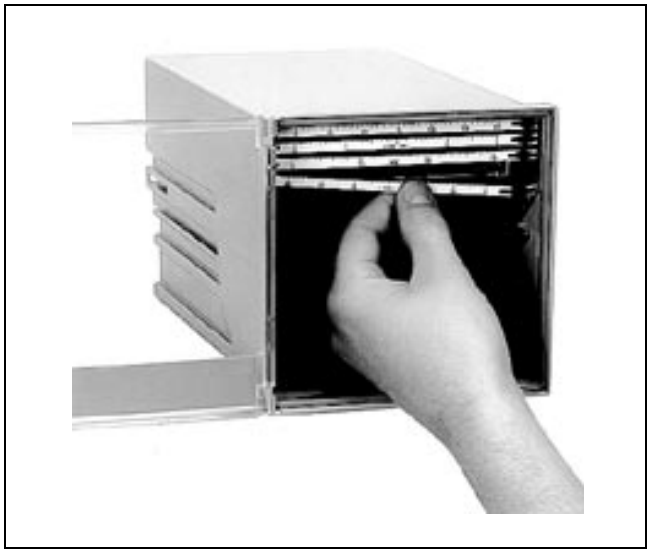

Fig. 17 Replacing scales

1. Remove fibre pens and print unit.
2. Undo the scale screws on the left.
3. Push scales to the right and disengage from scale screw.
4. Remove the scales by pulling them to the left.
5. Reinstall scales working in the opposite order.
6. Fit in the fibre pen.
7. Check the measuring system zero with the start of scale. See zero and span adjustment.

Replacing the measuring point name plate

(see Fig. 18)



Fig. 18 Replacing the measuring point name plate

- Simply pull out the flexible measuring point designation plate and fit a new one.

Maintenance

Replacing fuses

(see Fig. 19)

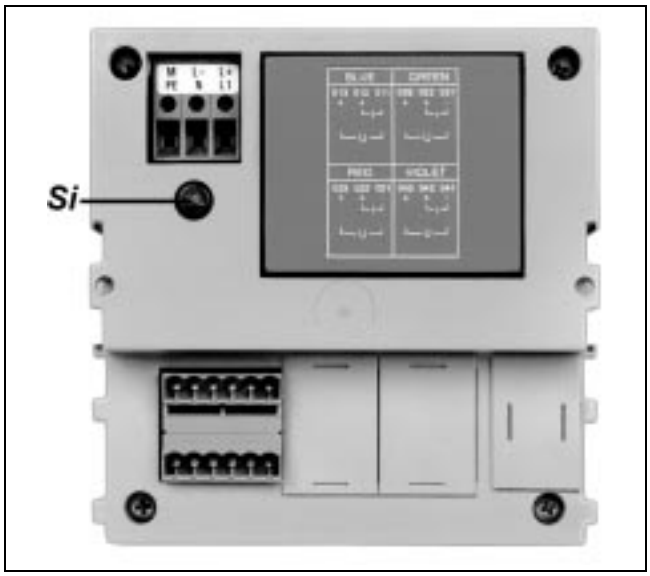

Fig. 19 Replacing fuses *Si*

Caution

Make sure that only fuses with the required rated current and of the specified type are used for replacement. The use of makeshift fuses and the short-circuiting of fuse-holder are prohibited.

When the apparatus is connected to its supply, terminals may be live, and the opening of covers or removal of parts except those to which access can be gained by hand is likely to expose live parts.

1. Unscrew the fuse holder.
2. Replace fuse *Si*.
3. Screw back the fuse holder.

Fuse rating

230 V T 0,315 L
115 V T 0,315 L
24 V M 1,6 E

Technical data

Measuring section

Measuring deviation
Class 0.5 to IEC 484

Dead zone
0.25 % of span

Response time (selectable acc. to measuring channel)
2 s; 5 s; 20 s; 60 s

Measurement variable / nominal ranges

Direct current
0...20 mA; Ri = 40 Ω
4...20 mA; Ri = 50 Ω

Direct voltage
0...10 V; Ri = 500 kΩ

Effects

Influence of temperature
0.2 % / 10 K

Influence of supply voltage
0.1 % for 24 V DC ±20 %
0.1 % for 24 V AC +10 % / −15 %
0.1 % for 115 V AC +10 % / −15 %
0.1 % for 230 V AC +10 % / −15 %

Influence of AC parasitic voltages
≤ 0.5 % of span

Influence of external magnetic field 1 mT
≤ 0.5 % of the span

Influence at mechanical stress
during and after the effect ± 0.5 % of the span

Recording section

Scale
one graduation per measuring system
Scale plate width 5 mm
Character height 2 mm

Recording

Fibre pen with ink reservoir. Content approx. 1.4 ml, length of line approx. 1300 m. Distance between tips of fibre-tip recording pens 2 mm.

Arrangement of the measuring systems and colour assignment:
Version without printer channel

		Number of line channels			
		1	2	3	4
	green			x	x
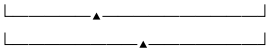	red		x	x	x
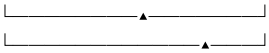	blue	x	x	x	x
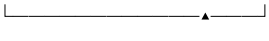	violet				x

Chart speed
chart speeds 1; 5; 10; 20; 60; 120; 300 and 600 mm/h selectable in the display and operator control unit

Chart
32 m roll chart or 16 m fanfold chart

Visible diagram length
60 mm

Recording width
100 mm (chart width 120 mm, DIN 16 230)

Chart feed-in (with roll chart)
via automatic catch of fresh paper by take-up reel. Capacity of take-up reel 32 m.

Power supply

UC power supply unit

24 V AC/DC ±20 %

Power consumption
at max. complement approx. 15 W / 20 VA

AC power supply unit

24 AC / 115 AC / 230 V AC, +10 % / −15 %

Frequency range
47.5...63 Hz

Power consumption
at max. complement approx. 20 W / 25 VA

General and Safety Data

Environmental capabilities

Climate class
3K3 to DIN IEC 721-3-3

Ambient temperature
0...25...50 °C

Transport and storage temperature
−40...+70 °C

Relative humidity
≤ 75 % annual average. Max. relative humidity ≤ 85 % during operation. Avoid condensation.

Note effect of atmospheric humidity on the chart paper acc. to DIN 16 234.

Mechanical features

Tested
to DIN IEC 68 Part 2-27 and to DIN IEC 68 Part 2-6

Transport
Impact 30g / 18 ms
Vibration 2g / 5...150 Hz

In function
Vibration 0.5 g / ± 0.04 mm / 5...150 Hz / 3 x 2 cycles

Electromagnetic compatibility

The protection targets of the EMC directive 89/336/EEC with regard to radio interference suppression to EN 55 011 and to interference resistance acc. to EN 50 082-2 are met.

Radio interference suppression
Limit class B to EN 55 011 or
Post Office Ordinance 243/92

Immunity to interference
Tested to IEC 801

Type of test	Test severity	Effect	Severity degree
Burst (5/50 ns) of			
main line	2 kV	≤ 1 %	3
measuring lead	2 kV	≤ 1 %	3
Surge (1.2/50 µs) on			
mains lead common	2 kV	≤ 1 %	3
differential	1 kV	≤ 1 %	2
Radiated HF field			
80 MHz...1GHz	10 V/m	≤ 1 %	3
lead routing			
0.15...80 MHz	10 V	≤ 1 %	3
1 MHz pulse on			
mains leads common	2 kV	≤ 1 %	3
differential	1 kV	≤ 1 %	3
Discharge of static electricity (1/30 ns)	6 kV	≤ 1 %	3

The NAMUR industrial standard EMC is fulfilled.
(interface lines shielded)

Permitted interference voltages

	Permissible interference parasitic voltage
Serial interference peak-to peak	≤ 0.3 x span max. 3 V
Normal-mode rejection	35 dB
Common-mode parasitic voltage	60 V DC 250 V AC
Common-mode rejection	83 dB for DC 96 dB for AC

Electrical safety

Tested
to DIN EN 61 010-1 (Classification VDE 0411)
or to IEC 1010-1

Class of protection
I

Overvoltage category
III at mains input
II for inputs

Degree of contamination
2 in unit and at the input terminals

Test voltage
3.75 kV measuring channels to power supply
2.2 kV protective conductor to power supply

Connection, case and mounting

Electrical connections
Degree of protection IP 20
Theaded-head terminals for control inputs.
Max. wire cross-section 2 x 1 mm^2

Screw-plug terminals for mains connection
Max. wire cross-section 1 x 4 mm^2 or 2 x 1.5 mm^2

Case
Moulded plastic for panel or rack (see Fig. 2)

Degree of case protection acc. to IEC 529
Reserve IP 54
Reserve IP 20

Colour of case
Pebble grey to RAL 7032

Case door
Moulded material
Option: Metal frame door with glass pane nonreflecting

Mounting of case
with 2 mounting brackets (optionally for panel or rack) for rack mounting centering brackets required (see Suppl. No. 92204-4-0457301). Max. width of grid rod = 40 mm

Mounting orientation
Lateral −30°...0...+30°
Inclination backwards 20°,
Inclination forwards 20°

Mounting distance
Horizontally or vertically 0 mm, case door must open at a 100° angle.

Weight
Approx. 3 kg

Fulfilled standards or norms

A) International Standards		
IEC 484	DIN 43 782	Potentiometric recorders
IEC 1010-1	DIN EN 61 010-1	Electrical safety (test voltages)
IEC 664	VDE 0110	Overvoltage category Degree of contamination
IEC 68-2-6	DIN IEC 68-2-6	Mechanical features (vibratios)
IEC 68-2-27	DIN IEC 68-2-27	Mechanical features (Shock)
IEC 529	DIN 40 050	Degree of case protection
IEC 801 EN 60801	DIN VDE 0843	Immunity to electromagnetic interference
IEC 721-3-3	DIN IEC 721-3-3	Ambient climatic conditions
IEC 742	DIN EN 60 742	VDE 0551 classification Safety transformer
B) German norms		
DIN 43 802		Scales
DIN 16 234		Chart paper
DIN 43 831		Case

Packing instructions

Remove the fibre-tip inserts when transporting.

If the original packing is no longer available, the unit must be wrapped in an insulating air foil or corrugated board and packed in a sufficiently large crate lined with shock absorbing material (foamed material or similar) for transportation. The amount of cushioning must be adapted to the weight of the unit and to the mode of transport. The crate must be labelled “Fragile”.

For overseas shipment the unit must additionally be sealed airtight in 0.2 mm thick polyethylene together with a desiccant (e.g. silica gel). The quantity of the desiccant must correspond to the packing volume and the probable duration of transportation (at least 3 months). Furthermore, for this type of shipment the crate should be lined with a double layer of kraft paper.

Subject to technical changes.

Reprint, reproduction or translation of this Operating Manual or parts thereof are not permitted without our prior consent.

Hartmann & Braun
GmbH & Co. KG

Werk Heiligenhaus
Höseler Platz 2, D-42579 Heiligenhaus · Tel. (0 20 56) 12 - 0 · Fax (0 20 56) 12 - 56 79
Postanschrift: Postfach 10 02 51, D-42567 Heiligenhaus

Printed in the Fed. Rep. of Germany Operating Manual 42/43-31-1 EN 4.96 WPS 1990