evoqua
WATER TECHNOLOGIES

WALLACE & TIERNAN®
FLOW CELL



DEPOLOX® POOL E

INSTRUCTION MANUAL

NOTICE
Original Instruction Manual.

Contents

1. Introduction 5
1.1 Target groups 5
1.2 Structure of the documentation 5
1.3 Conventions 5
2. Safety 6
2.1 Intended use 6
2.2 General safety instructions 6
2.3 Specific operating phases 7
2.4 Warranty conditions 7
2.5 Exclusion of liability 7
3. Description 8
3.1 Version 8
3.2 Configuration options 10
3.3 Spare Parts/extensions 11
3.4 Optional accessories 11
3.5 Flow cell 11
3.6 DFMe electronics module 12
3.7 Module SiDiSens conductivity (optional) 13
3.8 Sensors 13
3.9 Technical data 13
4. Installation 17
4.1 Scope of delivery 17
4.2 Transport and storage 17
4.3 Required ambient conditions 17
4.4 Mechanical Installation 18
4.5 Installation of the module 18
4.6 Removing and fitting the housing cover 21
4.7 Installing the optional strainer 21
4.8 Connecting the sample water inlet 21
4.9 Connecting the sample water outlet 22
4.10 Sample water extraction options 23
4.11 Installing the fine filter 26
4.12 Inserting or replacing electrode cleaning sand 26
4.13 Plugging sensors into the DFMe electronics module 27
4.14 Fitting the sensors 28
4.15 Installing calibration aids 29
4.16 Startup 29
4.17 Shut-down 30
4.18 Renewed start up 30
4.19 Installing retrofit kits/extensions 31

5. Maintenance 34
5.1 Maintenance intervals 34
5.2 Maintenance parts set 34
5.3 Checking for leakage 34
5.4 Checking and replacing the electrode cleaning sand 35
5.5 Checking and replacing the fine filter 35
5.6 Cleaning the flow rate monitor and check valve 35
5.7 Cleaning or replacing the optional strainer 36
5.8 Cleaning 36
6. Dismantling and disposal 37
6.1 Dismantling 37
6.2 Disposal 37
7. Spare parts, Accessories and Retrofit kits 39
7.1 Cell body, DEPOLOX® Pool E flow cell 39
7.2 DEPOLOX® Pool E flow cell - non-pressurized version 40
7.3 DEPOLOX® Pool E flow cell - pressurized version 42
7.4 DFMe electronics module 44
7.5 Sensors 45
7.6 Membrane sensor 46
7.7 LED glow stick 46
7.8 CAN bus extension cable for connection to DFMe electronics module 46
7.9 Instruction manual 46
7.10 Accessories 47
7.11 Retrofit kits/extensions 47
8. EC Declaration of Conformity and Certificate 48

1. Introduction

1.1 Target groups

This instruction manual provides the information required for installation, operating and maintenance personnel for the installation, operation and maintenance of the DEPOLOX® Pool E flow cell.
All personnel working with and on the DEPOLOX® Pool E flow cell must have read and understood the instruction manual, particularly the safety instructions.

1.2 Structure of the documentation

This instruction manual contains important information for the safe, trouble-free and economical operation of the DEPOLOX® Pool E flow cell. A thorough review of these instructions will help to prevent danger, reduce repair costs and downtimes and increases the reliability and service life of the DEPOLOX® Pool E flow cell.
The Chapters Installation and Maintenance are intended only for trained and authorized service personnel. These chapters contain important information on the assembly, configuration, start-up, maintenance and repair, which must be performed by this target group.

1.3 Conventions

This instruction manual contains a number of notes with different priorities that are labeled with pictograms.

⚠ DANGER

Immediate danger to life and limb! If the situation is not corrected, death or serious injury will result.

⚠ WARNING

Danger to life and limb! If the situation is not corrected, death or serious injury can result.

⚠ WARNING



Electrocution hazard.

⚠ ATTENTION

If this note is not observed, moderate or minor injury or damage to equipment can result.

NOTICE

These notes indicate a material risk or provide useful information to make working with the DEPOLOX® Pool E flow cell easier.

NOTICE



Do not throw away or burn the batteries! Batteries must be disposed of at a collection point.

2. Safety

2.1 Intended use

The DEPOLOX® Pool E flow cell in combination with the installed sensors and 700 P electronics module is intended exclusively for the measurement and control of the treatment of water in swimming pools and baths.
The operational safety is only guaranteed if the DEPOLOX® Pool E flow cell is used in accordance with its intended application. The DEPOLOX® Pool E flow cell may only be used for the purpose defined in the order and under the installation, operating and ambient conditions specified in this instruction manual.
All inspection and maintenance work must be carried out at the specified intervals.
Compliance with the intended use also includes reading this instruction manual and observing all the instructions therein.
The owner/operator of the installation bears sole responsibility for consequences of any use that does not conform with the installation's intended use.

⚠ DANGER

Risk of injury or death!
The DEPOLOX® Pool E flow cell must not be operated with flammable liquids

2.2 General safety instructions

The manufacturer places great emphasis on safety when working on or with the DEPOLOX® Pool E flow cell. This is taken into account, starting with the design of the installation, by the integration of safety features.

Safety regulations
The safety instructions in this documentation must be observed at all times. Additional industry-wide or in-house safety regulations also continue to apply.

Safety instructions on the flow cell
All safety instructions attached to the flow cell must be observed. These instructions must always be clearly legible and complete.

State-of-the-art technology
The flow cell has been constructed in accordance with the technological state-of-the-art and the accepted rules of safety engineering. However, if the flow cell is used by persons who have not been adequately instructed, danger to the life and limb of such persons or third parties and damage to the unit itself or to other property cannot be ruled out. Work not described in this instruction manual must be performed only by authorized personnel.

Personnel
The operator of the overall system must ensure that only authorized and qualified specialist personnel are permitted to work with and on the flow cell. "Authorized specialist personnel" are trained, skilled personnel employed by the owner/operator, the manufacturer or, if applicable, the service partner. Work on electrical components must be carried out by qualified electricians.

Spare parts / components
Trouble-free operation of the flow cell is only guaranteed if original spare parts and components are used in precisely the combination described in this instruction manual. Failure to observe this instruction may lead to malfunctions or damage to the flow cell.

Extensions and conversions
Any modifications, extensions or conversions to the flow cell that could impair its safety require the written approval of the manufacturer.

Electrical power
Only qualified electricians or trained personnel supervised by a qualified electrician are permitted to perform any work on electrical components and must do so in accordance with valid electro-technical regulations.
During normal operation, the controller must remain closed. Connect power cables in accordance with the wiring diagram.

⚠ DANGER

Risk of injury or death!
External voltages may still be connected even if the operating voltage is switched off.

IT security
The manufacturer offers IT security mechanisms for its products to support secure system operation. We recommend checking on a regular basis to see what information is available regarding IT security developments for your products. Information on this can be found on the Internet. Moreover, for the safe operation of an installation, it is also necessary to integrate the automation components into a holistic IT security concept which comprises the entire system and is in accordance with the state of the art in IT technology. Integrated products from other manufacturers should also be taken into account.
During commissioning of the flow cell, the factory-configured passwords and user names should be replaced with individual ones and the user administration enabled.

Disposal
Ensure safe and environment-friendly disposal of agents and replacement parts. Dispose of electronic waste in accordance with local and national regulations.

2.3 Specific operating phases

- Never employ any working methods which could affect safety!
- Never operated with flammable liquids.
- The flow cell may only be operated with the housing closed!
- Inspect the flow cell at least once daily for externally visible damage and faults! Inform the responsible person/authority immediately of any detected changes (including any changes in the operating performance)!
- Have malfunctions remedied immediately!
- During installation and maintenance work, secure the flow cell against being switched back on!
- If stipulated, disconnect all parts from the power supply before performing any inspection, maintenance or repair work. Then first test the disconnected components to ensure they do not carry any voltage.
- Never use corrosive cleaning agents (e.g. spirit, scouring agents)!

2.4 Warranty conditions

The following must be observed for compliance with warranty conditions. If any of the conditions are not met, the warranty is void.

- Installation and commissioning by the manufacturer or trained and authorized specialist personnel, e.g. from contracted companies.
- Intended use
- Observation of the operational parameters and settings.
- The unit may only be operated by trained personnel.
- An operating log book must be kept (only in the public sector).
- Only approved calibration chemicals may be used.
- The unit must not be exposed to frost.
- The prescribed maintenance work must be carried out.
- Use of original spare parts.

2.5 Exclusion of liability

We are not liable for any damages incurred during installation or use of these hardware and software components. This applies specifically to trouble-free interaction with the software and hardware components you choose.
We accept no liability for any loss sustained by the buyer (in particular, lost profits, lost information and service interruptions) arising through the use of the flow cell nor for other damage. You are solely responsible for the installation!
The content of the instruction manual has been checked to make sure that it matches the hardware and software described. Nevertheless, deviations cannot be ruled out, and we therefore assume no liability for full conformity. The details in this instruction manual are checked regularly and any necessary corrections included in subsequent issues.

3. Description

The DEPOLOX® Pool E flow cell (module type D01) is part of the Pool Management System DEPOLOX® Pool E 700 P.

The DEPOLOX® Pool E flow cell is a special flow cell adapter for sample water from various pool applications. In combination with the 700 P electronics module and the integrated sensors, the DEPOLOX® Pool E flow cell measures and controls the hygiene assistance parameters free chlorine, pH value and ORP (Redox) voltage, as well as combined chlorine, total chlorine, conductivity and temperature.

DEPOLOX® Pool E flow cell is available in both a non-pressurized and a pressurized version. The two versions differ in the number of sensors that can be installed and in the design of the sample water outlet. The non-pressurized version is characterized by a free sample water outlet. With the pressurized version, the sample water is returned into the system's circuit.

The for sensors required for the measurement tasks in swimming pools (optional) and the LED glow stick are inserted or screwed into the mounting hole in the cell body cover.

The maintenance-free flow control valve is the main hydraulic part of DEPOLOX® Pool E flow cell. It has the task of keeping the sample water flow constant, irrespective of fluctuations in operating pressures.

The multi-sensor monitors the correct flow and records the temperature of the sample water. The metallic sensor housing guarantees good sample water earthing. The continuous hydromechanical cleaning of the electrode of the chlorine sensor prevents the effective natural contamination of the electrode surfaces and guarantees long-term chlorine measurements.

DFMe electronics module converts the analog sensor signals for digital transmission to 700 P electronics module. If a total chlorine membrane sensor TC3 CAN (optional) is used, this is connected directly to DFMe electronics module or routed through the CAN connection on conductivity module SiDiSens (optional) to DFMe electronics module. The conductivity sensor (optional) is connected to DFMe electronics module through conductivity module SiDiSens.

3.1 Version

Part No.	DEPOLOX® Pool E flow cell
W3T350213	non-pressurized version
W3T350214	pressurized version

The DEPOLOX® Pool E flow cell (module type D01) is configured in the factory according to the customer's specific requirements, with the 700 P electronics module (module type E01) according to the variant code. The scope of delivery differs in the version of the DEPOLOX® Pool E flow cell, the sensors, electronics components and accessories. The variant code consists of 12 digits and is printed on both the type plate and packaging sticker.

Example

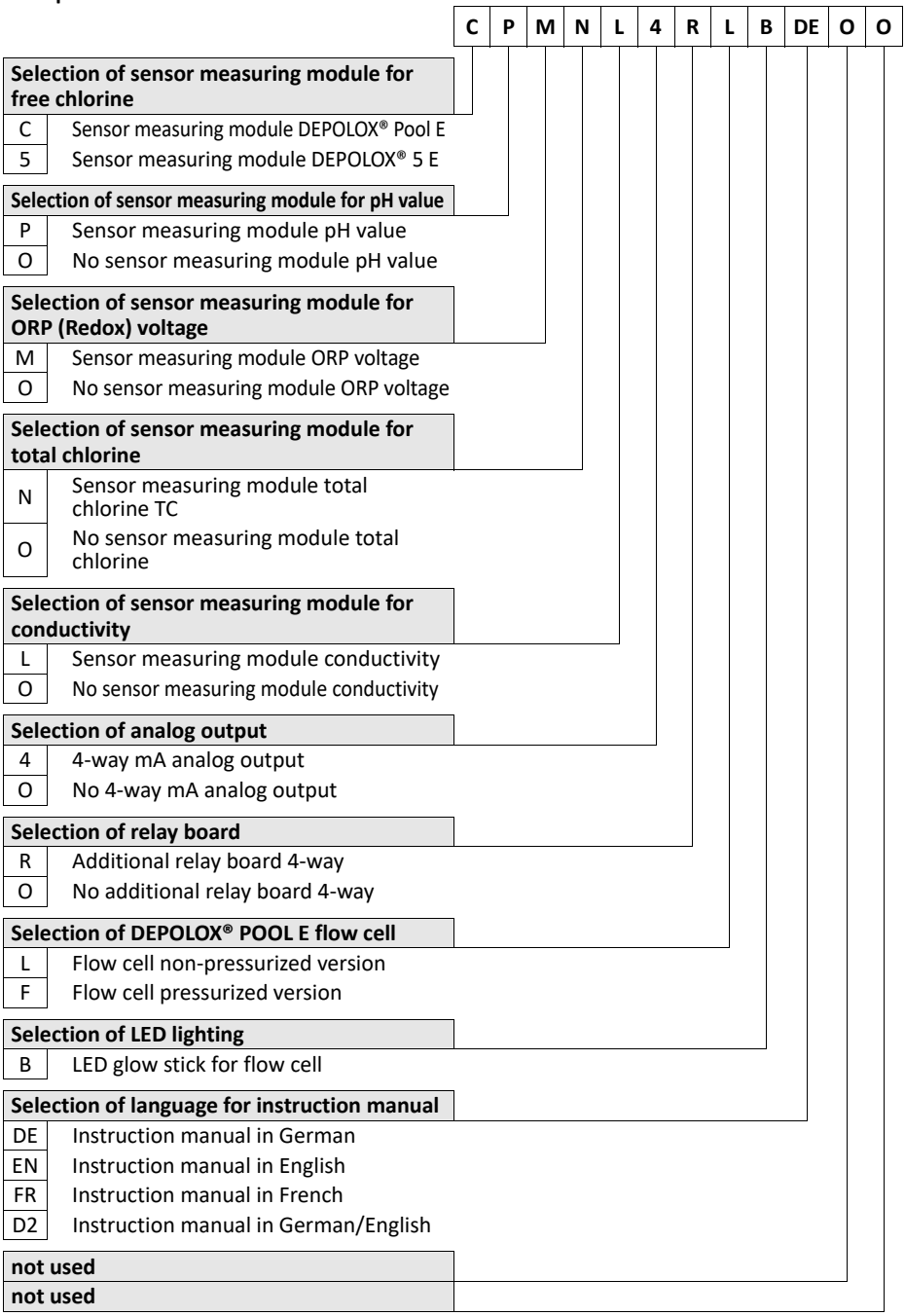
C P M N L 4 R L B DE O O
Selection of sensor measuring module for free chlorine
C Sensor measuring module DEPOLOX® Pool E
5 Sensor measuring module DEPOLOX® 5 E
Selection of sensor measuring module for pH value
P Sensor measuring module pH value
O No sensor measuring module pH value
Selection of sensor measuring module for ORP (Redox) voltage
M Sensor measuring module ORP voltage
O No sensor measuring module ORP voltage
Selection of sensor measuring module for total chlorine
N Sensor measuring module total chlorine TC
O No sensor measuring module total chlorine
Selection of sensor measuring module for conductivity
L Sensor measuring module conductivity
O No sensor measuring module conductivity
Selection of analog output
4 4-way mA analog output
O No 4-way mA analog output
Selection of relay board
R Additional relay board 4-way
O No additional relay board 4-way
Selection of DEPOLOX® POOL E flow cell
L Flow cell non-pressurized version
F Flow cell pressurized version
Selection of LED lighting
B LED glow stick for flow cell
Selection of language for instruction manual
DE Instruction manual in German
EN Instruction manual in English
FR Instruction manual in French
D2 Instruction manual in German/English
not used
not used

3.2 Configuration options

Designation	DEPOLOX® Pool E flow cell		
	non-pressurized version	pressurized version	pressurized version with cell body cover W3T417269 (optional)
			
	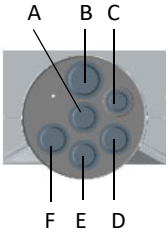	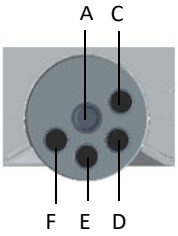	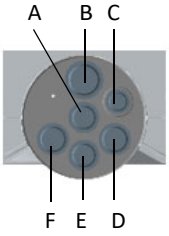
	A Chlorine sensor (free chlorine) *B Total chlorine membrane sensor TC3 CAN* *C Conductivity sensor* *D ORP (Redox) single-rod measuring chain* *E LED glow stick* *F pH single-rod measuring chain*		
Chlorine sensor (free chlorine)	X	X	X
Total chlorine membrane sensor TC3 CAN	X	-	X
pH single-rod measuring chain	X	X	X
ORP (Redox) single-rod measuring chain	X	X	X
Conductivity sensor	X	X	X
Sample water temperature (multi-sensor)	X	X	X
Flow rate monitor (multi-sensor)	X	X	X
Sample water earthing (multi-sensor)	X	X	X
Sample water fine filter Only when using the total chlorine membrane sensor!	(X)	-	(X)
LED glow stick	X	X	X
Sample water inlet with shut off ball valve	X	X	X
Sample water outlet with shut off ball valve	-	X	X

3.3 Spare Parts/extensions

Part No.	Designation
W3T320090	Sensor measuring module DFMe Total chlorine TC3 CAN, non-pressurized version
W3T510332	Sensor measuring module DFMe Total chlorine TC3 CAN, pressurized version incl. cell body cover, part. no. W3T417269
W3T320088	Sensor measuring module DFMe pH
W3T320089	Sensor measuring module DFMe ORP (Redox)
W3T320091	Sensor measuring module DFMe Conductivity LF325

NOTICE

The pressurized version can be retrofitted with the total chlorine membrane sensor TC3 CAN. Please note that the standard cell body cover must be replaced by an optional cell body cover, part no. W3T417269 (chapter 4.19.2).

3.4 Optional accessories

For order numbers, see chapter 7.

- Strainer (chapter 4.8)
- Booster pump (chapter 4.8)
- Pressure reducing valve (chapter 4.8)
- PVC or PE version, hose and hose connection (chapter 4.8)
- CAN bus extension cable (chapter 4.4)

3.5 Flow cell

3.5.1 Design

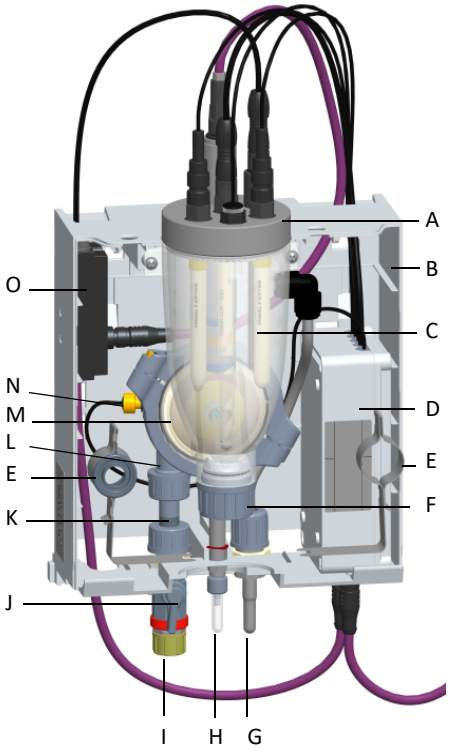

Fig. 1 Cross-section, flow cell non-pressurized version

A Cover for holding the sensors and LED glow stick (cell body cover)
B Plastic housing with removable housing cover
C Cell body
D DFMe electronics module
E Calibration holding clip
F Flow distributor cap
G Sample water outlet, in pressurized version also with shut-off ball valve
H Sample extraction unit (drain)
I Sample water inlet
J Shut-off ball valve
K Filter unit
L Check valve housing
M Flow control valve
N Multi-sensor
O Module SiDiSens conductivity (optional)

3.5.2 Function

The sample water is connected on the input side to the shut-off ball valve via the G1/2" connection. The input pressure must be around 0.25 to 3.0 bar. To guarantee a constant flow, the minimum input pressure must not be less than 0.25 bar. Otherwise, an optional booster pump must be used. If the admission pressure exceeds 3.0 bar, an optional pressure reducing valve must be used.
The sample water flows over the optional strainer, which prevents dirt particles penetrating into the flow cell.
The sample water flows in the flow direction to the check valve housing through the filter unit or through the built-in fine filter (membrane sensors only). The check valve housing provides a non-return function and guides the ball for monitoring the flow rate. In the filter unit a stainless steel fine filter (sample water fine filter) with a mesh size w=500 ìm can be installed. The fine filter is only used in conjunction with the membrane sensors.
The multi-sensor monitors the correct flow by the float principle with reed switch and measures the temperature with the Pt1000. The large-surface transducer grounding is through the stainless steel sensor housing.
The flow control valve ensures a flow of the sample water that is not dependent on the operating pressure. The correct sample water flow of 33 l/h is factory-preset, checked and logged. If the admission pressure rises, the valve ball moves towards the closing direction; if the admission pressure drops, the ball moves towards the opening direction.
The sensors are installed in the mounting hole of the cell body cover with standard thread connections or in special sensor mounts.
The LED glow stick is fitted in the cell body cover for visual inspection of the sensors and for color indication of messages or faults.
The flow distributor cap screwed into the cell body from the bottom enables the continuous hydromechanical cleaning of the electrode of the chlorine sensor using special cleaning sand and thereby effectively prevents the natural contamination of the electrode surfaces. Clean electrode surfaces and a constant flow of sample water are decisive criteria for a qualitative good chlorine measurement and quick responsiveness.
The sample water runs off directly through the top cell body outlet through an outlet nozzle for hoses with inner diameter 6 mm. In the case of the pressurized version, the sample water runs off through a shut-off ball valve with G 1/2" A-connection. With the pressurized version, a maximum back pressure of 1.5 bar is permitted here.
A sample extraction unit is used to draw sample from the cell body through the low-pressure side of the flow control valve and to drain the cell body for servicing.

3.6 DFMe electronics module

DFMe electronics module consists of a spray-water tight housing with built-in sensor electronics and is integrated in the main housing of the flow cell. The sensor cables are prefabricated and are splash-proof to IP66. The motherboard holds the sensor input for the chlorine sensor, the LED glow stick and the evaluation electronics for the multi-sensor. Optionally, the motherboard contains two additional slots for the pH and ORP (Redox) single-rod measuring chain. To the integrated CAN socket the CAN connection cable to 700 P electronics module is connected. Further optional sensors, such as for total chlorine and/or conductivity module SiDiSens can be connected through a second CAN connection socket (optional). See design chapter 4.13 - Fig. 8.

3.7 Module SiDiSens conductivity (optional)

To measure the conductivity, conductivity module SiDiSens LF (optional) is installed in DEPOLOX® Pool E flow cell. The SiDiSens LF module contains the sensor electronics for conductivity sensor LF325 (4-conductor measurement). Through the CAN interface the SiDiSens LF module is connected with 700 P electronics module. In addition, the optional total chlorine membrane sensor TC3 CAN can be connected via the CAN socket. See design chapter 4.19.1 - Fig. 14.

3.8 Sensors

The DEPOLOX® Pool E flow cell (module type D01) can optionally be equipped with the following sensors:

- Chlorine sensor
- pH single-rod measuring chain
- ORP (Redox) single-rod measuring chain
- Conductivity sensor with conductivity module SiDiSens (LF)
- Total chlorine membrane sensor TC3 CAN

NOTICE

When disinfecting the inline electrolysis systems, the chlorine sensor or the ORP (Redox) single-rod measuring chain must be used, gold version (gold electrode).

Order numbers in chapter 7.5. Please follow the relevant instruction for the sensors.

3.9 Technical data

3.9.1 DEPOLOX® Pool E flow cell (module type D01)

Housing	Dimensions (WxHxD)	253 x 375 x 163 mm
	Weight	approx. 2.5 kg
Connections	Non-pressurized version	Inlet: G 1/2" A thread connection Outlet: Connecting nipple for hoses ID 6 mm
	Pressurized version	Inlet and outlet: G 1/2" A thread connection
Flow control valve	Sample water flow	33 l/h, controlled, preset at the factory
	Flow control range	0.25 to 3.0 bar
	Back pressure	Non-pressurized version: free drain Pressurized version max. 1.5 bar
Multi-Sensor	Switching point	21 l/h ±3 l/h
	Switching hysteresis	2 l/h
	Temperature sensor	Pt1000
Operating conditions	Water quality	Bath water acc. to standard
	Storage temperature	-20 to +70°C

3.9.2 DFMe electronics module

Version	Sensor electronics integrated in the flow cell for connection of Chlorine sensor und multi-sensor; 2 slots for sensor modules pH and ORP (Redox)
Power supply	24 V DC
Connection	5-pole M12 socket for CAN interface and 24 V DC supply; Extension option for second 5 pole M12 socket
Storage temperature	-20 to +70 °C
Ambient temperature	0 to 50 °C
Environment	No direct sunlight
Atmospheric pressure	75 to 106 kPA
Max. working height	2000 m
Relative humidity	< 80 % non-condensing
Noise emission	< 45 dB

3.9.3 Module SiDiSens LF (conductivity)

Version	Sensor electronics integrated in the flow cell for connection of the conductivity sensor
Power supply	24V DC via CAN connection cable
Connection	5-pole M12 socket for CAN interface extension; CAN connection cable with 5-pole; M12 plug for connection to the DFMe; Sensor cable for connection of the conductivity sensor LF325 (4-electrode system)
Storage temperature	-20 to +70 °C
Ambient temperature	0 to 50 °C
Environment	No direct sunlight
Atmospheric pressure	75 to 106 kPA
Max. working height	2000 m
Relative humidity	< 80 % non-condensing
Noise emission	< 45 dB

3.9.4 Sensors

NOTICE
When disinfecting inline electrolysis systems, the gold version of the chlorine sensor or the ORP (Redox) single-rod measuring chain must be used.

Chlorine sensor	Platinum version (W3T160652)	Gold version (W3T160991)
Version	Amperometric 3-electrode sensor with platinum electrodes, salt reserve, zirconium dioxide diaphragm, polymerized solid electrolyte, Ag/AgCl drain system	Amperometric 3-electrode sensor with gold electrodes, salt reserve, zirconium dioxide diaphragm, polymerized solid electrolyte, Ag/AgCl drain system
Measurement range	0 to 50 mg/l Cl_2	
Working temperature range	-5 to +80°C (23 to 176°F)	
Operating pressure	0 to 6 bar (6 x 10^5 Pa)	
Minimum conductivity of the sample water	50 µS/cm	
Installation length	165 mm	
Screw-in thread	PG 13.5	
Storage temperature	-5 to +30°C (23 to 86°F)	

ORP (Redox) single-rod measuring chain	Platinum version (W3T169298)	Gold version (W3T172356)
Version	Single-rod measuring chain with platinum electrode, salt reserve, zirconium dioxide diaphragm, polymerized solid electrolyte, Ag/AgCl drain system	Single-rod measuring chain with gold electrode, salt reserve, zirconium dioxide diaphragm, polymerized solid electrolyte, Ag/AgCl drain system
Measurement range	±2000 mV	
Working temperature range	-5 to +80°C (23 to 176°F)	
Operating pressure (electrode shaft)	0 to 6 bar (6 x 10^5 Pa)	
Minimum conductivity of the sample water	50 µS/cm	
Installation length	120 mm	
Screw-in thread	PG 13.5	
Storage temperature	-5 to +30°C (23 to 86°F)	

pH single-rod measuring chain (W3T169297)	
Version	Single-rod measuring chain with universal membrane glass, salt reserve, zirconium dioxide diaphragm, polymerized solid electrolyte, Ag/AgCl drain system
Measurement range	pH 0 to 12 (temporarily to pH 14)
Working temperature range	-5 to +80°C (23 to 176°F)
Operating pressure	0 to 6 bar (6 x 10^5 Pa)
Minimum conductivity of the sample water	50 µS/cm
Installation length	120 mm
Screw-in thread	PG 13.5
Storage temperature	-5 to +30°C (23 to 86°F)

Conductivity sensor (W3T172052)	
Version	4-electrode measurement, integrated temperature sensor, graphite electrodes, epoxy shaft
Measurement range	1 µS/cm bis 2 S/cm
Cell constant	0,475 cm^{-1} ±1,5%
Working temperature range	-5 to +100°C (23 to 212°F)
Operating pressure (electrode shaft)	0 to 10 bar (1 x 10^6 Pa)
Installation length	120 mm
Installation	Loose or pressurized with clamp connection
Protection rating	IP 67 (in plugged in state)
Storage temperature	0 to +50°C (32 to 122°F), store in the fresh air

3.9.5 Membrane sensor

NOTICE
For technical data, please refer to the separate instruction manual of the membrane sensors.

Maximum allowable operating pressure	0.5 bar (7.25 PSI) only with a suitable flow cell! No pressure impulses and/or vibrations. Please note the back pressure of the flow cell!

4. Installation

4.1 Scope of delivery

NOTICE

The DEPOLOX® Pool E flow cell (module type D01) is configured in the factory according to the customer's specific requirements, with the 700 P electronics module (module type E01) according to the variant code (chapter 3.1).

The scope of delivery includes:

- DEPOLOX® Pool E flow cell (module name D01)
  - non-pressurized or pressurized version
- LED glow stick
- Top-hat rail
- Assembly accessories
- Instruction manual

4.2 Transport and storage

Transport

The DEPOLOX® Pool E flow cell is shipped in standard packaging. During transport, the packaged system must be handled carefully and should not be exposed to wet weather or moisture.

Check that the transport packaging is undamaged. In the event of damage, please inform the transport company immediately, as your rights to compensation will otherwise be lost. If a component is damaged, please contact your affiliate immediately.

Keep the packaging until the system has been commissioned and put into operation.

Storage

Electronics module, flow cell and sensors must be stored in dry condition without any residual water in a dry place that is not exposed to the elements.

⚠ ATTENTION

Damage to device and sensor!

Observe different storage temperatures (chapter 3.9) and manufacturer specifications of the buffer solution and calibration solution.

Shut-down

The flow cell may only be taken out of operation by trained and authorized personnel.

4.3 Required ambient conditions

NOTICE

Correct and safe operation can only be guaranteed if the requirements for the ambient conditions are met. All applicable national and local regulations must be observed!

- The flow cell must be protected against moisture, rain, frost, heat and direct sunlight and may therefore not be installed outdoors.
- Do not use the flow cell in environments where there are flammable gases, fumes or dust or conductive dust.
- Do not subject the flow cell to strong shocks or vibrations.
- The air in the room must be non-condensing.

4.4 Mechanical Installation

⚠ WARNING

Risk of injury or damage to the installation!

- Only authorized and qualified electricians are permitted to install the flow cell.
- All electrical work on the system must be carried out by authorized and qualified electricians.
- Modifications to the device other than those described in this instruction manual are not permissible.

NOTICE

- Install the flow cell to the left of the electronics module.
- Leave a clearance of at least 250 mm above the flow cell for working with the sensors.
- Screws and dowels for fixing to a solid wall are included in the scope of delivery.
- Tallow-drop screws and dowels for fixing to a solid wall are included in the scope of delivery.
- If the device is to be installed on a suitable lightweight wall, use the appropriate mounting fixtures. Not included in the scope of delivery!
- The electronics module is not suitable for electrical connection with permanently installed cable conduits. If the cable glands do not meet local installation rules and regulations, these glands must be replaced with suitable ones.
- If electronics module and flow cell are installed in different locations, you must use CAN bus extension cable (optional). This must not be longer than 1000 m.
- Measurement are shown in millimeters. To convert to inch measurement, divide by 25.4 (1 inch = 25.4 mm).

1 Installation of the module (chapter 4.5).
2 Remove the housing cover of the flow cell (chapter 4.6).
3 Install the optional strainer (chapter 4.7).
4 Connect the sample water inlet (chapter 4.8)
   - with tubing connection
   - with rigid pipework
5 Connect the sample water outlet (chapter 4.9).
6 Installing the fine filter (chapter 4.11). Only when using the membrane sensor.
7 Insert electrode cleaning sand (chapter 4.12).
8 Plugging sensors into the DFMe electronics module (chapter 4.13).
9 Fitting the sensors (chapter 4.14).
10 Fit calibration aids (chapter 4.15).
11 Refit the housing cover (chapter 4.6).

4.5 Installation of the module

Install the electronics module and flow cell with or without DIN rail. Dimension drawing chapter 4.5.3.

4.5.1 With DIN rail

1 Secure the DIN rail to a solid wall using the dowels and screws supplied.
2 Hook the electronics module onto the DIN rail so that it is flush at the right.
3 Fasten the electronics module to the solid wall at the bottom by the holders using dowels and screws.
4 Hook the flow cell on the DIN rail to the left of the electronics module.
5 Fasten the flow cell to the solid wall at the bottom by the holders using dowels and screws.

4.5.2 Without DIN rail

The dimensions for the drilling pattern can be found on the back of the plastic housing.

1 Attach the tallow-drop screws and dowels provided to the solid wall (included in the scope of delivery).
2 Hook the electronics module onto the screws.
3 Fasten the electronics module to the solid wall at the bottom by the holders using dowels and screws.
4 Hook the flow cell onto the screws.
5 Fasten the flow cell to the solid wall at the bottom by the holders using dowels and screws.

4.5.3 Dimension drawing

DEPOLOX® Pool E flow cell (non-pressurized version) and electronics module

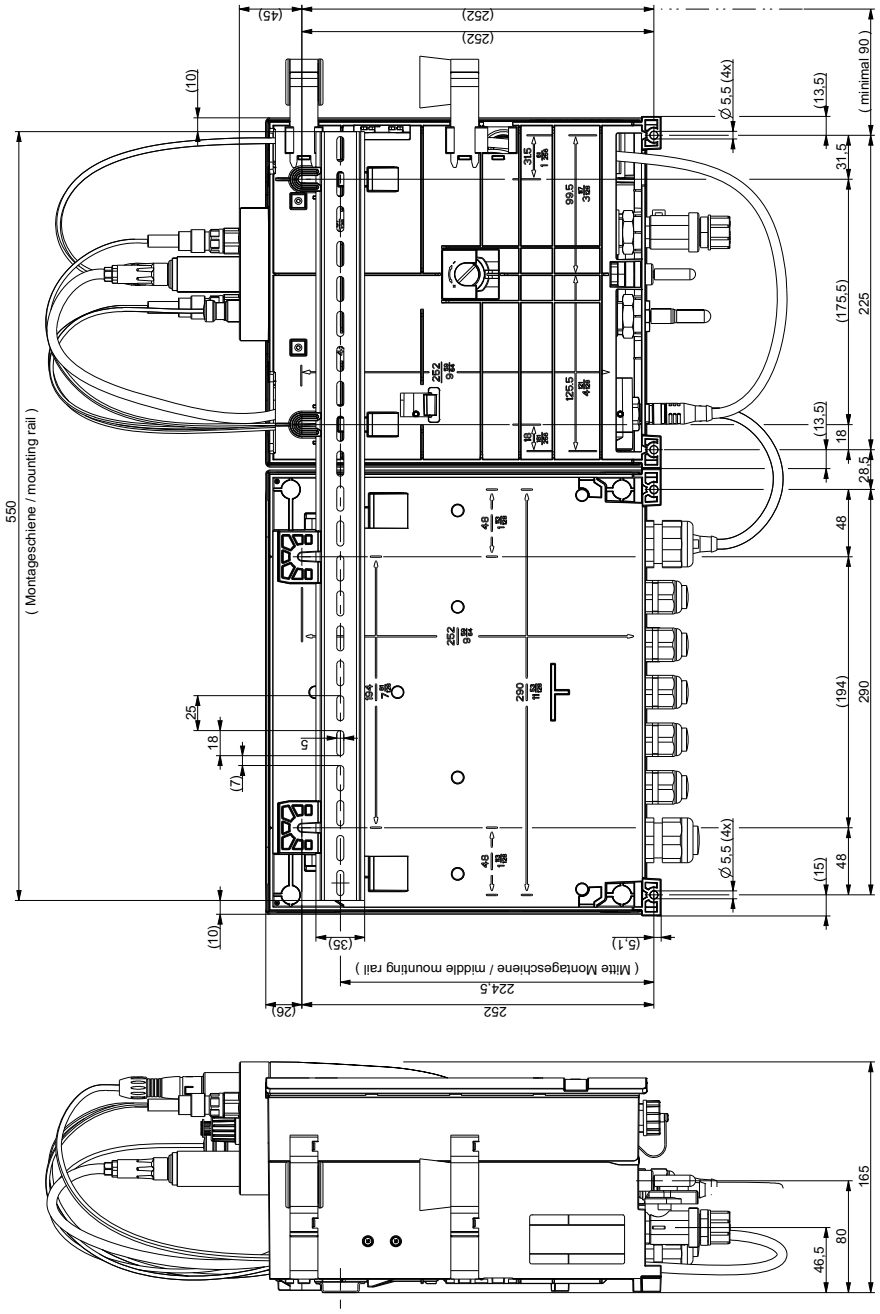

DEPOLOX® Pool E flow cell (pressurized version) and electronics module

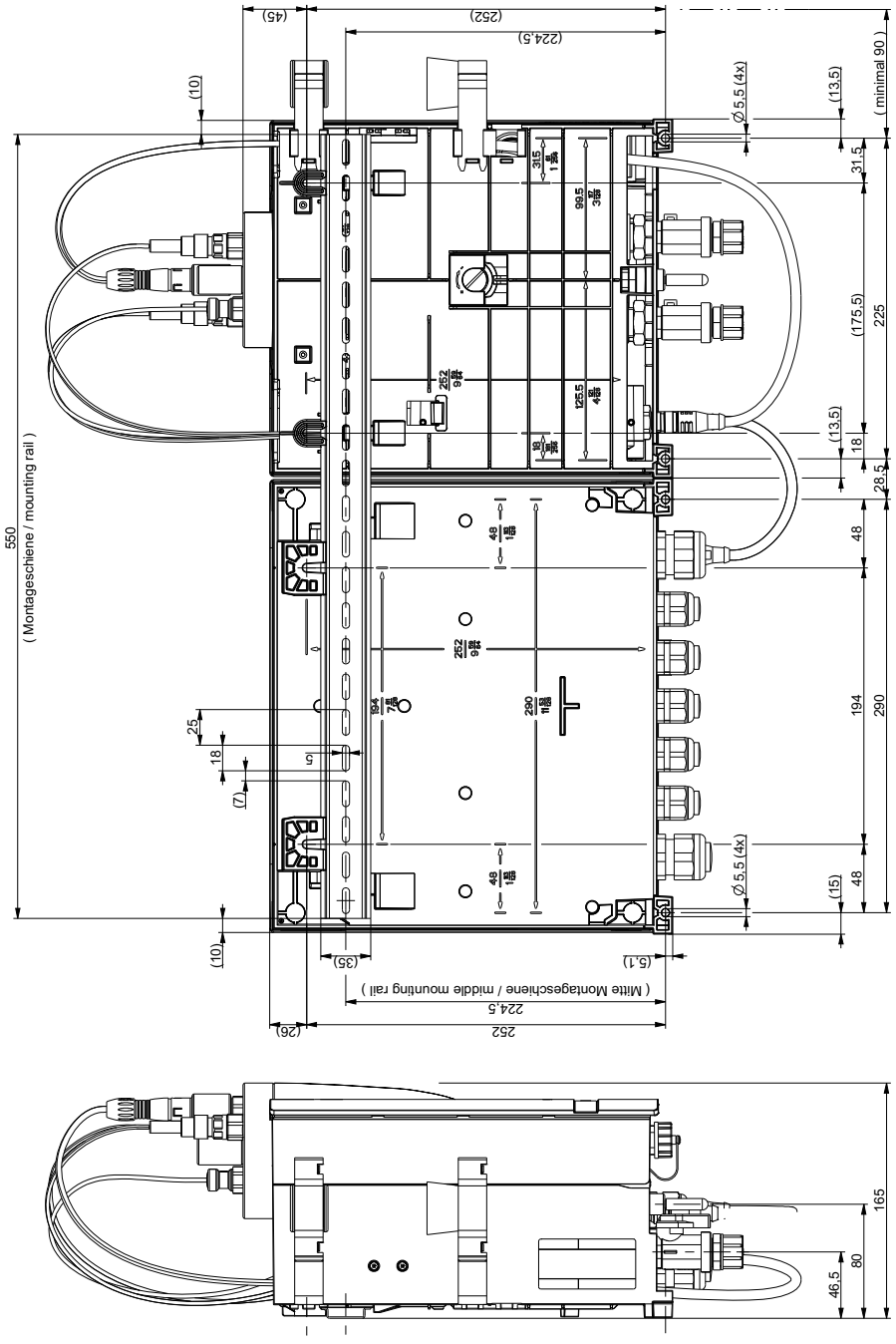

4.6 Removing and fitting the housing cover

Removing

- Remove the housing cover of the flow cell. To do this, press both unlocking buttons (A) on the top of the housing and carefully remove the cover toward the front.

Fitting

- Fit and engage the housing cover of the flow cell. To do this, position the housing cover at the bottom and carefully press it upward until the housing cover engages on the unlocking buttons.

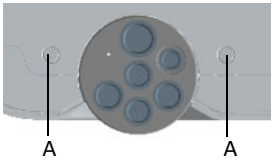

Fig. 1 View of top of housing cover

A Unlocking buttons

4.7 Installing the optional strainer

1 Release the screw joint on the sample water inlet with shut-off ball valve (A) (threaded connection G 1/2" A).
2 Connect strainer with pipe clamp (B).
3 Connect sample water inlet (C).

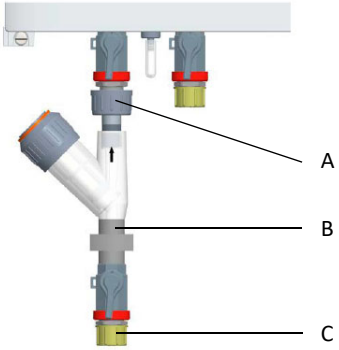

Fig. 2 Section, installation of strainer

A Screw joint on sample water inlet with shut-off ball valve
B Strainer with pipe clamp
C Sample water inlet

4.8 Connecting the sample water inlet

When connecting the sample water inlet, note the following:

- No water pipes made of copper may be fitted in the installation. They would falsify the measurement.
- A distinction must be made between a sample water inlet with tubing connection and a sample water inlet with rigid pipework.
- Select the sample water extraction point that guarantees a proper mixture of disinfectant and a bubble-free sample water flow.
- To prevent long loop dead times, ensure that the lines in the sample water inlet are as short as possible and do not have a large line cross-section. Long measuring dead times mean poorer control quality!
- The pressure in the sample water inlet must always be within a range of min. 0.25 to max. 3.0 bar. The pressure in the sample water inlet must always be 0.25 bar higher than in the sample water outlet.
- If the inlet pressure is below 0.25 bar, a booster pump must be used (chapter 4.10).
- If the inlet pressure exceeds 3.0 bar, an optional pressure reducing valve must be used (chapter 4.10).
- To protect the flow cell against contamination, an optional strainer with a mesh width of 0.5 mm (0.02“) should be provided on the sample water inlet (chapter 4.7).

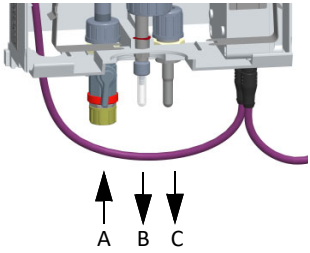

Fig. 3 Section, flow cell, non-pressurized version

A Sample water inlet with shut-off ball valve
B Flow cell drain valve (drain at the drain screw)
C Sample water outlet

4.8.1 With tubing connection

NOTICE

The water-tightness of the hose screw connection is only guaranteed if the following installation instructions are followed!

1 Release union nut (C) on the hose screw connection.
2 Insert the tubing (D) until it meets the hose bushing (A).
3 Push the locking ring (B) out until the union nut (C) engages the connecting threads.

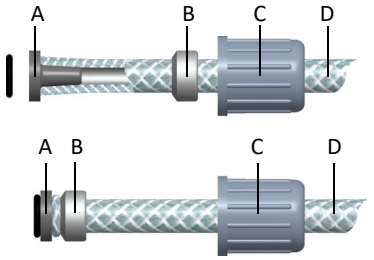

Fig. 4 Detail of hose screw connection

A Hose bushing
B Locking ring
C Union nut
D Tuning

4.8.2 With rigid pipes

NOTICE

Ensure that the sample water pipes are installed free of mechanical stress.

1 Connect the sample water pipework to the connection thread (G1/2" A) of the shut-off ball valve.

4.9 Connecting the sample water outlet

4.9.1 Non-pressurized version

When connecting the sample water outlet, note the following:

- No water pipes made of copper may be fitted in the installation. They would falsify the measurement.
- On the non-pressurized version, no back-pressure is permitted in the cell body (design chapter 4.8 - Fig. 3).
- The sample water outlet must be open. We recommend using a funnel above the outlet.
- The sample water outlet must be laid in such a way as to prevent siphoning.

4.9.2 Pressurized version

When connecting the sample water outlet, note the following:

- No water pipes made of copper may be fitted in the installation. They would falsify the measurement.
- Ensure that the drain screw (flow cell drain valve) is always closed.
- On the pressurized version, a maximum back-pressure of 1.5 bar is permitted on the sample water outlet.

4.10 Sample water extraction options

Example:
Sample water extraction, drawing on page 26
- for fresh water (W3T158528)
- for salt water (W3T158529)

Item	Qty.	Part No.	Designation
2	1	W2T505181	Screw joint
3	2	W2T505182	Screw joint
4	1	W3T171416	Strainer complete
6	1	W3T167518	Hose connection parts
7	1	W3T173160 W3T173198	Pressure gage: • fresh water • salt water
9	1	W3T513332	Ball valve
11	1	W3T163670	Sample pipe
14	1	W3T172948	Threaded part
17	1	W2T505600	Reduction
20	1	W3T163500	Reduction nipple
23	1	W2T507288	Insert
24	1	W2T506934	Union nut
25	1	W3T172720	O-ring
26	1	W3T161254	Flat gasket
27	1	W3T171146	Nozzle washer
28	1	W3T172727	Flat gasket
35	1	W3T166090	Pipe segment
36	2	W2T506782	Reducing junction, short
39	1	W2T506527	T-piece
40	1	W3T166089	Pipe segment
41	1	W2T506778	Reducing junction, short
42	1	W2T507525	T-piece
43	1	W2T507535	Elbow bend

Example for sample water extraction - Part list on page 23

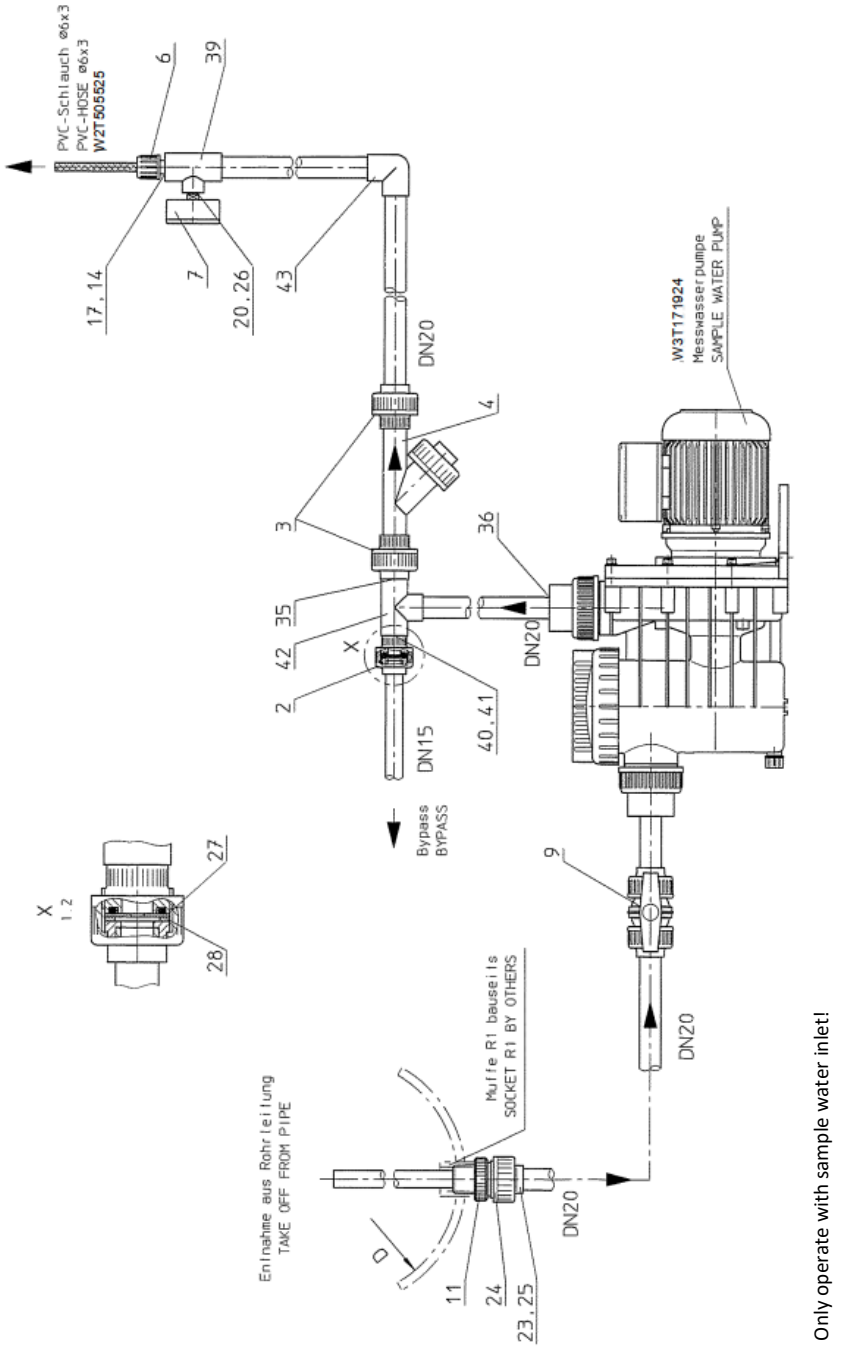

Only operate with sample water inlet!

Example for sample water extraction using a booster pump

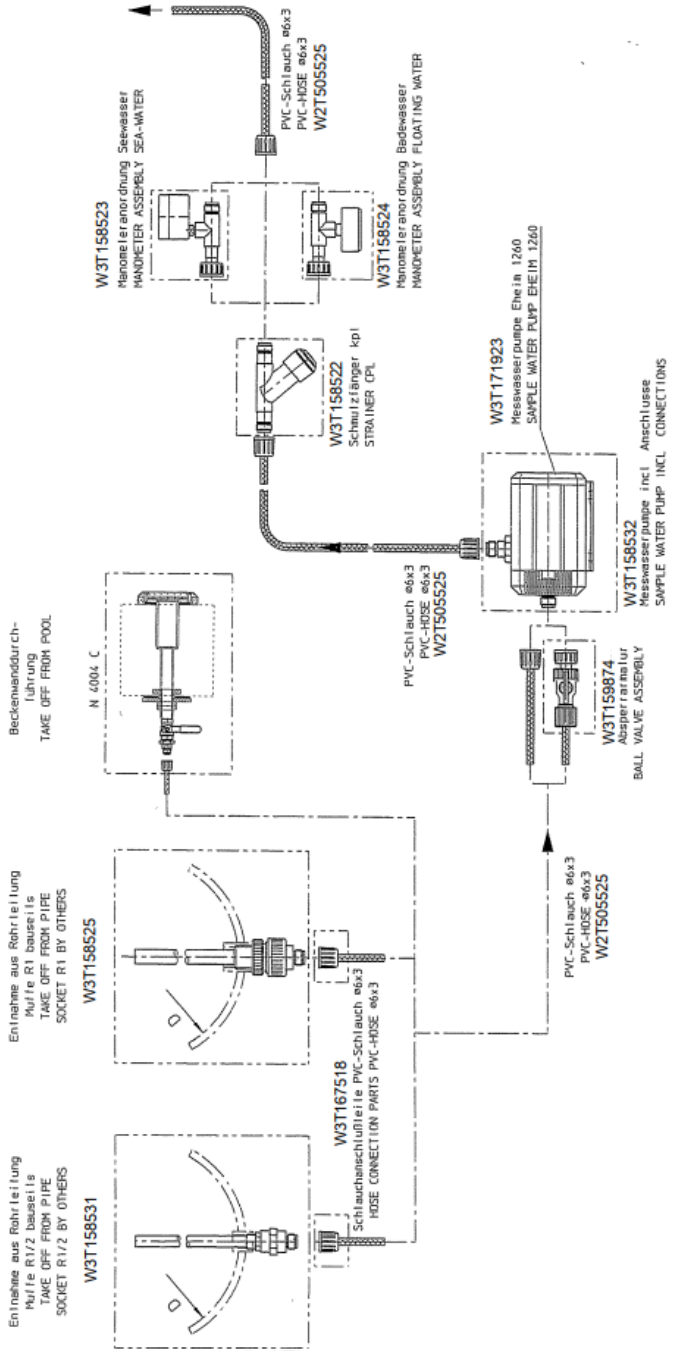

Only operate with sample water inlet!

4.11 Installing the fine filter

NOTICE

A fine filter must only be installed when membrane sensors are employed.

1 Release both knurled nuts (B).
2 Remove the entire filter unit (A).
3 Push the fine filter (D) into the filter unit. Ensure that the O-ring (C) is fitted correctly.
4 Fit the entire filter unit (A). Observe the correct installation position (top/bottom).
5 Tighten the knurled nuts (B).

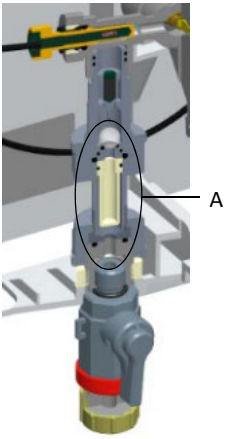

Fig. 5 Cross-section, flow cell, non-pressurized version

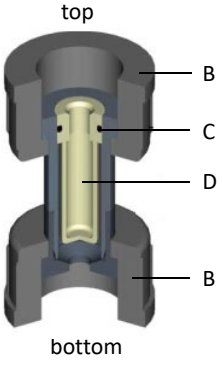

Fig. 6 Cross-section, filter unit

A Entire filter unit
B Knurled nuts
C O-ring
D Fine filter

4.12 Inserting or replacing electrode cleaning sand

The electrode cleaning sand (W3T171317) is supplied in a plastic bottle, the cap serves as a measure.

4.12.1 Non-pressurized version

NOTICE

With the non-pressurized version, the electrode cleaning sand can also be added in a simplified form over the mount hole of a sensor in the cell cover.

1 Pull out or unscrew the sensor.
2 Pour cleaning sand over the mount hole into the cellbody.
3 Plug the sensor back in again or screw it on.

4.12.2 Pressurized version

1 Close the shut-off ball valve on the sample water inlet and outlet.
2 Open the drain screw on the sample extraction unit and empty the cell body. To do so, temporarily loosen a plug or sensor to allow air to flow in.
3 When the cell body is empty, close the drain screw once more.
4 Remove the housing cover of the flow cell.
5 Unscrew the flow distributor cap. Hold a container under-neath, as the remaining water will drip out.
6 **Replace the electrode cleaning sand:** Flush out the electrode cleaning sand of the flow distributor cap.
7 Fill the cap of the cleaning sand bottle until it is one-third full.
8 Then pour the electrode cleaning sand into the middle of the flow distributor cap (Fig. 7). The inner indentation of the flow distributor cap is filled roughly half-way with electrode cleaning sand.

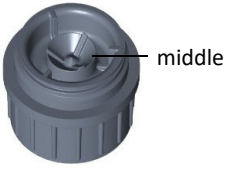

Fig. 7 Flow distributor cap

9 Screw the flow distributor cap back on.
10 Open the shut-off ball valve on the sample water inlet and outlet. The cell body fills with sample water again.
11 Refit the housing cover of the flow cell.
12 After 2 to 3 hours running-in time, perform a chlorine calibration. If necessary, repeat the chlorine calibration after 24 hours (see chapter “Calibration“ in the instruction manual “700 P Electronics module“).

NOTICE

An initial rotating air bubble at the bottom of the cell body does not affect the measurement.

4.13 Plugging sensors into the DFMe electronics module

1 Insert the multi-sensor (A) in the flow control valve.
2 Connect sensor cable Cl_2 free (B) to the chlorine sensor.
3 Insert or screw the LED glow stick (C) into the mounting hole in the cell body cover.
4 Connect the pH- and ORP (Redox) sensor cable plug (D, E) with the pH and ORP (Redox) single-rod measuring chain.
5 Plug the CAN connection cable into the CAN connection socket (L) and with connect with 700 P electronics module (CAN socket).

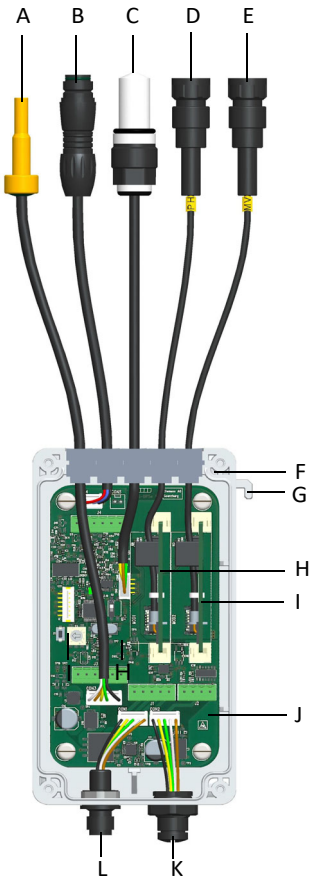

Fig. 8 Cross-section, DFMe electronics module

A Multi-sensor
B Sensor cable Cl_2 free
C LED glow stick
D pH sensor cable
E ORP (Redox) sensor cable
F Housing DFMe electronics module
G Mounting hook
H Sensor measuring module pH
I Sensor measuring module ORP (Redox)
J DFMe motherboard with measurement input Cl_2
K CAN extension socket
L CAN connection socket for 700 P electronics module

4.14 Fitting the sensors

NOTICE

- With the pressurized version, the sensors must be screwed in or secured to prevent them from being pushed out.
- The sensors electrodes must be prepared accordingly. Please see the appropriate instructions for the sensors!
- Keep the protection cap or KCl tank with stand for later use.
- The pressurized version can be retrofitted with the total chlorine membrane sensor TC3 CAN. Please note that the standard cell body cover must be replaced by an optional cell body cover, part no. W3T417269 (chapter 4.19.2).

⚠ CAUTION

Risk of injury or damage to the system!
Install the membrane sensors into the flow cell module.
The maximum allowable operating pressure of the membrane sensors is 0.5 bar (7.25 PSI)! With the pressurized version, the membrane sensor must be screwed in or secured to prevent them from beeing pushed out. Due to the pressure of the water the membrane sensor may slip out of the pressurized version. Please refer to the separate instruction manual of the membrane sensors.

Depending on requirements, insert or screw in the sensors into the mount hole on the cover of the cell body.

1 Remove the plug from the mount hole on the cover of the cell body.
2 Remove the protection cap from the chlorine sensors.
3 Remove the KCl tank and stand for the pH and ORP (Redox) single-rod measuring chain.
4 With the conductivity sensor, remove the blind plug and O-ring.
5 Plug the sensors into the mount hole on the cover of the cellbody, or screw in.

non-pressurized version	pressurized version	pressurized version with cell body cover W3T417269 (optional)
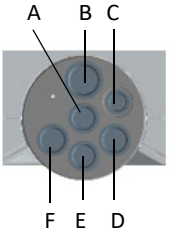	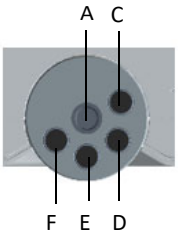	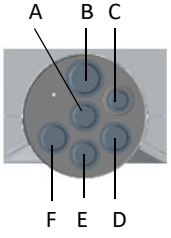

A Chlorine sensor (free chlorine)
B Total chlorine membrane sensor TC3 CAN
C Conductivity sensor
D ORP (Redox) single-rod measuring chain
E LED glow stick
F pH single-rod measuring chain

4.15 Installing calibration aids

Two calibration clips are installed in the housing cover. They are pushed into the side of the basic housing at the back. The clip with the plastic insert for the sensor is pushed into the top catch (A). The second clip is for holding calibration solution or buffer solution in a bag or beaker. For solution in a bag, fit the clip in the top position of the bottom catch (B). For solution in a beaker, select the position below this (C).

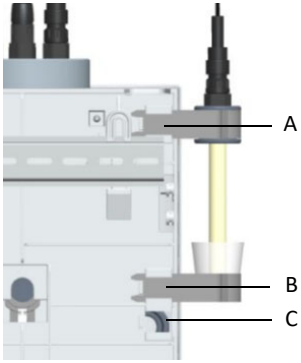

Fig. 9 Rear side of flow cell

A Top holding clip for sensor mounting
B Position of holding clip for bag
C Position of holding clip for beaker

4.16 Startup

⚠ DANGER

Risk of injury or death!
The DEPOLOX® Pool E flow cell must not be operated with flammable liquids.

⚠ CAUTION

Risk of injury or damage to the system!

- Observe the maximum allowable operating pressure! See chapter 3.9 “Technical data”.
- The maximum allowable operating pressure of the membrane sensors is 0.5 bar (7.25 PSI)!

NOTICE

Startup is described in the instruction manuel "700 P Electronics module“.

Following complete mechanical and electrical installation, initial commissioning can be carried out. Please check that the following conditions are met:

- Electronics module and flow cell are installed.
- Sample water inlet and outlet are connected.
- Optional strainer is installed.
- Fine filter is installed (only when using the membrane sensor).
- Sensors are installed in the flow cell.
- The sensors are connected to the electronics module.
- The electronics module is wired in accordance with the wiring diagram (circuit diagram) and local regulations.
- CAN bus extension cable is installed.
- Housing covers are fitted.
- Electrode cleaning sand is filled.
- All connections for leakage checked.

4.17 Shut-down

DANGER

Risk of injury or death!
External voltages may still be connected even if the operating voltage is switched off.

ATTENTION

Damage to flow cell!
If the installation site of the DEPOLOX® Pool E flow cell is not frostfree, the system must be taken out of operation in good time! See instruction manual "700 P electronics module" and the corresponding instructions for the sensors.

1 Disconnect the electronics module from the power supply.
2 Drain the sample water inlet and outlet.
3 Remove the housing cover of the flow cell.
4 Drain the cell body via the sample extraction unit.
5 Flush out the cleaning sand.
6 Dismantle the filter unit and the check valve housing (chapter 5.6).
7 When the remaining water has drained from the flow control valve, refit the filter housing and the check valve housing.
8 Remove the sensors from the mount hole in the cover of the cell body and disconnect from the DFMe electronics module.
9 Shut down the sensors. See relevant operating instructions for the sensors.
   - Fit watering cap (filled with diluted potassium chloride solution) to the chlorine sensor.
   - Plug in the pH or ORP (Redox) single-rod measuring chain in the KCl tank and stand with KCl solution.
   - Cleaning the conductivity sensor or wash the sensor in distilled water. Store the conductivity sensor in a dry place.
   - Store the sensors in a frost-free place.

ATTENTION

Damage to device and sensor!
Observe different storage temperatures (chapter 3.9) and manufacturer specifications of the buffer solution and calibration solution.

10 Refit the housing cover.

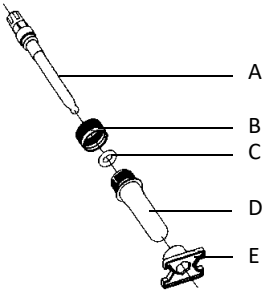

Fig. 10 pH and ORP (Redox) single-rod measuring chain with stand

A Sensor
B Sealing cap
C O-Ring
D Tank
E Stand

4.18 Renewed start up

1 Prepare the sensors. See relevant instructions for the sensors.
2 Refit the sensors and connect the sensors with DFMe electronics module (chapter 4.13 and 4.14).
3 Filling electrode-cleaning sand (chapter 4.12).
4 For recommissioning, see instruction manual “700 P electronics module".

4.19 Installing retrofit kits/extensions

DANGER

Risk of injury or death!
External voltages may still be connected even if the operating voltage is switched off.

4.19.1 Retrofitting sensor measuring modules, total chlorine embrane sensor TC3 CAN and module SiDi-Sens conductivity measurement

1 Disconnect the electronics module from the power supply. See instruction manual “700 P Electronics module“.
2 Remove the housing cover of the flow cell.
3 Take out all sensors from the mounting hole in the cell body cover and unplug the cable gland from DFMe electronics module. Hold the cable while doing this as it must not be allowed to twist.
4 Keep the sensors in a safe place (see instruction manual for sensors).
5 Disconnect CAN connection cable between DFMe electronics module and 700 P electronics module.
6 Remove DFMe electronics module from the DEPOLOX® Pool E flow cell housing. To do this, release the fixing screw on the underside of DFMe electronics module.
7 Unhook DFMe electronics module from the mounting hook (design chapter 4.13 - Fig. 8) of DEPOLOX® Pool E flow cell. To do this, raise DFMe electronics module and carefully unhook it from the mounting hook.
8 Open the housing of DFMe electronics module. To do this, release the four cover screws of DFMe electronics module.
9 Insert the optional sensor measuring module cards in the provided slots (design chapter 7.4).
10 When installing the SiDiSens LF module and/or the membrane sensor, switch off the CAN-balancing resistors (on the DFMe electronics module) or set DIP switch (Fig. 11) to the "OFF" position. Furthermore, the CAN extension socket (design chapter 4.13 - Fig. 8 - item K) must also be retrofitted. To do this, break out the indent on the housing underside of DFMe electronics module and fit the CAN extension socket. Check that all gasket inserts are correctly mounted.

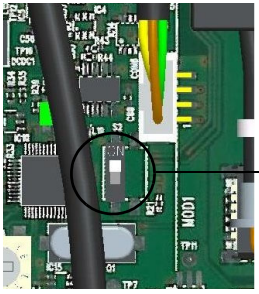

Fig. 11 Cutout of circuit board

11 Fit the housing cover of DFMe electronics module and secure with the four cover screws. Tighten hand-tight the housing screws (to a maximum torque of 0.7 Nm (± 0.15 Nm)).
12 Hook DFMe electronics module by the mounting hook onto flow cell and secure on the underside with the securing screws.

13 Install the SiDiSens LF module on the left side in the flow cell and secure with the enclosed plastic self-tapping screws (W2T807965 - 10 mm) in item A (Fig. 13).

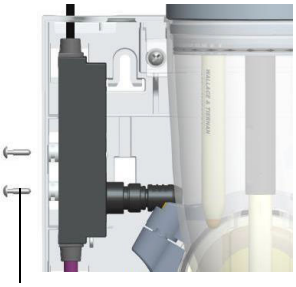

Plastic self-tapping screw (10 mm)

Fig. 12 Cutout of flow cell

⚠ ATTENTION

Damage to flow cell!
The screws should not be confused.
Distinguish between the plastic self-tapping screws for installing the flow cell and those used for the SiDiSens module.
Prior to the installation of the SiDiSens module, ensure that you use the correct plastic self-tapping screws. Use only the plastic self-tapping screws A2 (W2T807965 - 10 mm) when installing the SiDiSens module.

14 Plug in the CAN sensor cable of the SiDiSens LF module at item C (Fig. 13). In addition the M12 terminating resistor must be screwed on at item C (Fig. 14).

15 The membrane sensor is connected either at the CAN socket (C - Fig. 14) on conductivity module SiDiSens connected directly via the CAN extension socket (C - Fig. 13) on DFMe electronics module.

NOTICE

The pressurized version can be retrofitted with the total chlorine membrane sensor TC3 CAN (chapter 4.19.2).

16 Refit the housing cover of the flow cell.

17 Switch the power supply on again.

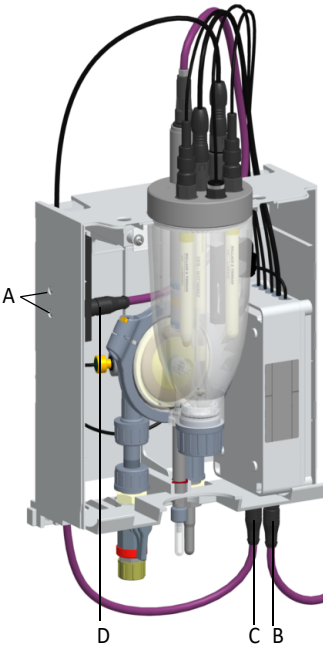

Fig. 13 Flow cell, non-pressurized

A Mounting recess
B CAN sensor cable connection
C SiDiSens LF connection
D Membrane sensor connection

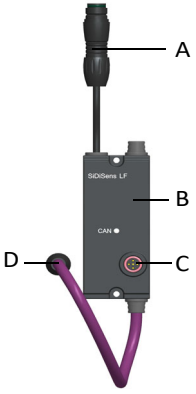

Fig. 14 Conductivity module SiDISens (LF)

A Sensor cable to conductivity sensor
B SiDiSens LF module
C CAN socket for connecting the total chlorine membrane sensor
D CAN connection cable with plug

Overview of CAN connection

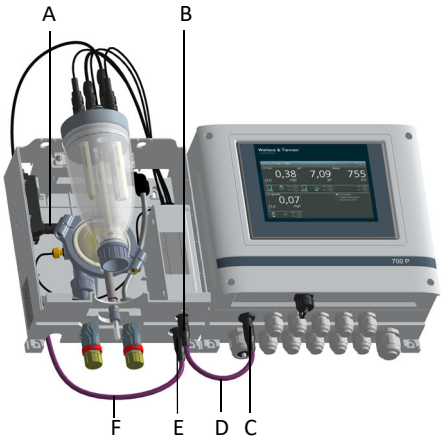

Fig. 15 Pool Management System

A CAN connection at SiDiSens LF module for connection of Membrane sensor or terminating resistor M12 of the module SiDiSens LF
B Securing screw, DFMe electronics module
C CAN socket for connection of CAN connection cable of the DEPOLOX® Pool E flow cell or DFMe electronics module
D CAN connection cable
E CAN extension socket
F CAN connection cable for SiDiSens conductivity module or membrane sensor

4.19.2 Replace standard cell body cover (optional)

The pressurized version can be retrofitted with the total chlorine membrane sensor TC3 CAN. Please note that the standard cell body cover must be replaced by an optional cell body cover (W3T417269).

1 Unscrew the standard body cell cover.
2 Remove from the optional body cell cover (E) the union bush (A) with dummy disc (B) and O-ring (C). Keep the parts for subsequent use (equipped without membrane sensor for total chlorine).
3 Screw the optional body cell cover (E) into the lid of the cell body (pressurized version).
4 First install the gasket (W3T164773) and than the clamping ring (W3T171789) in the corresponding opening on the cell body cover (D)
5 Install the sensor measuring module DFMe for total chlorine TC3 CAN (chapter 4.19.1).

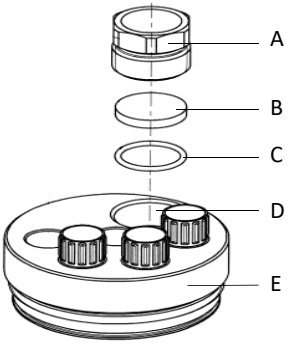

Fig. 16 Cell body cover (W3T417269)

A Union bush
B Dummy disc
C O-ring
D Opening for cell body cover
E Cell body cover (W3T417269)

5. Maintenance

DANGER

Risk of injury or death!
External voltages may still be connected even if the operating voltage is switched off.

NOTICE

Liability for defects can only be accepted if maintenance work is performed as specified. Adhere to the applicable standards and national and regional regulations.

5.1 Maintenance intervals

daily
- Check the flow cell, including all screw connections, for leakage

weekly
- Check the electrode cleaning sand

every six months
- Replace the electrode cleaning sand
- Replacing the electrolyte for the total chlorine membrane sensor

annually
- Replacing the membrane cap for the total chlorine membrane sensor

as required
- Clean or replace optional strainer
- Cleaning or replacing the fine filer (only when using the membrane sensor)

every 4 to 6 weeks or local standards
- Check ORP (Redox) sensor in calibration solution (see instruction manual sensor)
- Check conductivity measurement with comparative measurement and/or calibration solution (see instruction manual sensor)

in accordance with standard or local regulations
- Comparative measurement of chlorine, combined chlorine, total chlorine and pH, if necessary calibration

5.2 Maintenance parts set

5.2.1 Non-pressurized version

Part No.	Designation
W3T166181	Maintenance parts kit, annual maintenance
W3T170073	Maintenance parts kit, 4 years
W3T158882	Spare parts set for flow control valve

5.2.2 Pressurized version

Part No.	Designation
W3T158874	Maintenance parts kit, annual maintenance
W3T158878	Maintenance parts kit, 4 years
W3T158882	Spare parts set for flow control valve
W3T166180	Seal set
W3T320611	Sealing kit LED pressurized for LED glow stick

5.3 Checking for leakage

Check the entire flow cell every day, including all screw connections, for leakage. Repair any leaks immediately.

NOTICE

Ascending air bubbles in the cell body influence the measuring accuracy. The cause must be determined and remedied.

5.4 Checking and replacing the electrode cleaning sand

The electrode cleaning sand is necessary for cleaning the chlorine sensor and must be replenished or replaced if necessary. The electrode cleaning sand must be checked and replaced regularly (chapter 4.12). Grinds itself down with time. Check the flow cell at weekly intervals to make sure that there is enough electrode cleaning sand in the cell body. The electrode cleaning sand must be swirled around in the bottom part of the cell body.

NOTICE

After adding fresh electrode cleaning sand or replacing it, the electrode current can increase slightly for approximately 2 to 3 hours. Calibration is needed after this (see instruction manual “700 Electronics module“).

5.5 Checking and replacing the fine filter

The fine filter must be cleaned or replaced to protect the membrane sensor’s delicate membrane against soiling or damage and to prevent clogging.

1 Switch off the power supply.
2 Drain the sample water inlet and outlet.
3 Remove the housing cover of the flow cell.
4 Release both knurled nuts (A).
5 Remove the complete filter unit.
6 Remove the fine filter (C). To do this, screw the M6 screw into the fine filter and pull the fine filter out of the filter unit.
7 Rinse the fine filter with water, replace if necessary.
8 Push the fine filter into the filter unit. Ensure that the O-ring (B) is fitted correctly.
9 Fit the complete filter unit. Ensure that it is in the correct position (top/bottom).
10 Tighten the knurled nuts (A).
11 Refit the housing cover.
12 Reconnect the sample water inlet and outlet.
13 Re-establish the power supply.

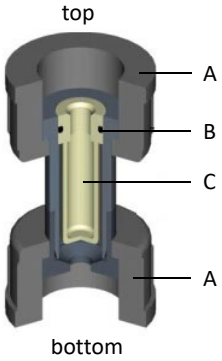

Fig. 1 Filter unit cross-section

A Knurled nut
B O-ring
C Fine filter

5.6 Cleaning the flow rate monitor and check valve

1 Switch off the power supply.
2 Drain the sample water inlet and outlet.
3 Remove the housing cover of the flow cell.
4 Remove the filter unit. To do this, release both knurled nuts.
5 Carefully pull the complete check valve housing (A) down and out.
6 Turn the check valve housing upside down and catch the flow ball (B) or if the ball is jammed, release it with a slight knock.
7 Now use a suitable blunt tool to push out the ball seat (D) and glass ball (C) against the direction of flow.
8 Clean the empty check valve housing, flow ball, ball seat and glass ball with clear water.
9 During reassembly, make sure that the ball seat and ball are correctly positioned (Fig. 3).
10 To help push the assembled check valve housing back into the control valve, we recommend slightly lubricating the gaskets with the Unisilikon grease provided.

11 Check that the check valve housing is correctly positioned by the guide lugs on the housing.
12 Fit the filter unit again. To do this, tighten the knurled nuts.
13 Refit the housing cover.
14 Connect the sample water inlet and outlet again.
15 Reconnect the power supply.

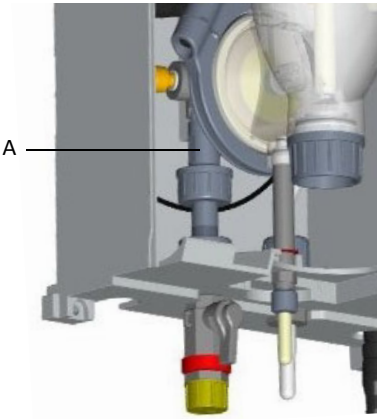

Fig. 2 Section, installation position of the check valve housing

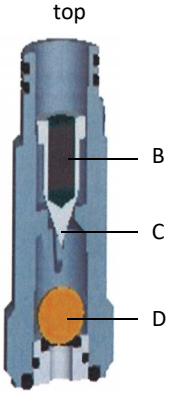

Fig. 3 Cross-section of the check valve housing

A Check valve housing (overall view)
B Flow ball
C Ball seat
D Glass ball

5.7 Cleaning or replacing the optional strainer

The optional strainer must be cleaned or replaced regularly to avoid contamination or blockages. The frequency of cleaning or replacement depends on the degree of contamination caused by the sample water.

1 Close the shut-off ball valve on the sample water inlet in front of the strainer.
2 Unscrew the strainer and rinse it with water. Catch escaping water in a container.
3 Remove the strainer screen and rinse it under running water or replace it.
4 Fit the strainer screen again and reinstall the strainer.
5 Open the shut-off ball valve on the sample water inlet and outlet again.

5.8 Cleaning

Never use corrosive cleaning agents (e.g. spirit, scouring agents)! We recommend that you use a moist cloth with a neutral household cleaning agent.

6. Dismantling and disposal

6.1 Dismantling

NOTICE
Only authorized, qualified and trained technicians may dismantle the system for disposal.

1 Prior to disposal, delete any personal data stored on the old equipment.
2 Disconnect the system from the power supply.
3 Dismantle the system into practical units.
4 Where possible, remove batteries or storage batteries from the equipment and hand them over to a separate collection point for old batteries.

6.2 Disposal

6.2.1 General information

Ensure safe and environment-friendly disposal of old equipment, replacement parts, auxiliary materials, chemicals and their containers. Disposal must be effected in compliance with local, regional, national and international regulations.

NOTICE	
	The symbol with the crossed-out garbage can indicates that the product - electrical and electronic equipment, batteries and storage batteries - must not be disposed of with household waste. At the end of its service life, the product must be disposed of appropriately or recycled. The statutory requirements of the country in which the product is put into use apply here.

6.2.2 Used electrical/electronic equipment

Electrical or electronic equipment is labeled with the symbol showing a crossed-out garbage can and must not be disposed of with household waste, but must be collected and disposed of separately. The statutory requirements of the country in which the product is put into use apply.

Before handover to a collection point, old batteries, storage batteries and lamps must be removed from the old equipment and turned over to the corresponding collection points.

Where such central collection systems are not available, used equipment purchased from us can be returned to us.

Please see our website at www.evoqua.com. for details. You can access the necessary information directly via the QR code.

See Chapter 6.2.5.

6.2.3 Used batteries and used storage batteries

Batteries and storage batteries are labeled with the symbol showing a crossed-out garbage can. Where, for technical reasons, it is not possible to label the batteries themselves, the symbol may be printed on the packaging.

Used batteries and used storage batteries must not be disposed of with household waste, but must be collected and disposed of separately. The statutory requirements of the country in which the product is put into use apply. If necessary, contact your regional or local authorities for details of collection points and options for separating and collecting waste.

⚠ DANGER
Risk of injury caused by damaged batteries and storage batteries! Short-circuiting, for example caused by external contact with the battery poles (metal on metal), may cause fire or an explosion. Prior to disposal, cover the poles of batteries and storage batteries with masking tape to prevent an external short-circuit. There is an increased hazard if batteries are damaged or leak. Avoid touching 'greasy' or leaking batteries with your bare hands wherever possible. Wash your hands thoroughly if they have come into contact with leaking components. Observe the respective safety instructions, in particular in the case of batteries and storage batteries containing lithium.

6.2.4 Packaging

Packaging is reusable waste which must not be disposed of with household waste, but must be collected and disposed of separately, e.g. at public collection points.

If necessary, contact your regional or local authorities for details of collection points and options for separating and collecting waste.

6.2.5 QR code

The QR code takes you directly to our “Recycling“ website.

Here, you will find detailed information on the disposal and return of used electrical/electronic equipment, used batteries and packaging.

You can also download the request form for returning electrical/electronic equipment to us via this QR code.

http://qr.evoqua.com/bdYxgi



7. Spare parts, Accessories and Retrofit kits

NOTICE

For reasons of safety, only use original spare parts. Please contact our customer service if you need any spare parts.

7.1 Cell body, DEPOLOX® Pool E flow cell

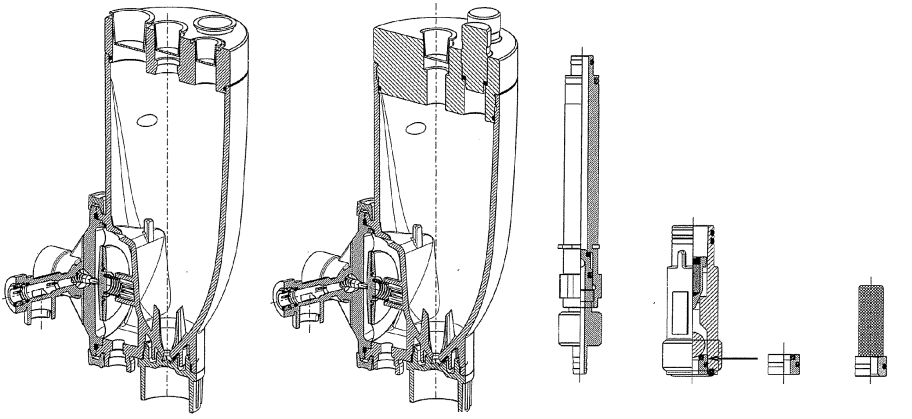

Item 1 Item 2 Item 3 Item 4 Item 5 Item 6

Pre-installed assembly groups

Item	Part No.	Designation
1	W3T320115	Cell body, fully non-pressurized version
2	W3T320116	Cell body, fully pressurized version
3	W3T166171	Sample extraction unit
4	W3T158603	Back pressure unit with float
5	W3T163739	Ball set cpl.
6	W3T166194	Fine filter with O-ring
7	W3T166180	Seal set

7.2 DEPOLOX® Pool E flow cell - non-pressurized version

DEPOLOX® Pool E flow cell - non-pressurized version (module name D01) - W3T350213

Item	Part No.	Designation
1	W3T247776	Basic housing
2	W2T507548	Type plate
3	W3T247777	Housing cover
7	W3T166170	Shut-off valve
8	W3T158593	Discharge nozzle
9	W2T507615	Flat nut
10	W3T158594	Cell body
11	W3T164226	Compression spring
12	W3T158569	Membrane unit
13	W3T160654	O-ring
14	W3T158595	Control valve body
15	W2T504209	Plastic cartridge
16	W3T160649	V profile clamp
17	W3T158567	Square nut
18	W2T504659	Cheese-head screw
19	W2T506019	Washer
20	W3T158572	Valve pin
21	W3T172795	Compression spring
22	W3T158573	Adjusting screw
23	W3T160357	O-ring
24	W3T160650	Flow distributor cap
25	W3T160655	O-ring
26	W3T160648	Check valve housing
28	W3T161396	O-ring
29	W3T169827	Cone
30	W3T172946	Ball
31	W3T172949	O-ring
32	W3T159707	Insert
33	W3T172975	O-ring
34	W3T168189	Fine filter
35	W3T158602	Filter unit
36	W2T505463	Pan head screw
39	W3T172041	Securing ring
40	W3T158576	Outlet drain pipe
41	W3T172997	O-Ring
42	W3T164597	O-ring
43	W3T158575	Drain screw
44	W3T166160	EPDM flat gasket
45	W3T172556	O-ring
46	W3T320060	Cell body cover
47	W3T160657	O-ring
50	W3T172861	O-ring
51	W2T863568	Adapter
54	W3T438413	Hose
55	W2T505093	Angle-reducing connector
78	W3T166169	Clip
79	W3T172045	Electrode mount
80	W3T161561	Screw cap
81	W3T168162	Protective cap
82	W3T164588	Protective cap
83	W3T161453	Protection plug
84	W3T169029	Protection plug
85	W3T169044	Protection plug
86	W3T164574	Protection plug
401	W3T183616	Conductivity measurement module SiDi-Sens
402	W2T807965	Plastic self-tapping screw A2 (10 mm)
405	W2T807968	Plastic self-tapping screw A2
406	W3T309477	Product strip
420	W2T507548	Type plate

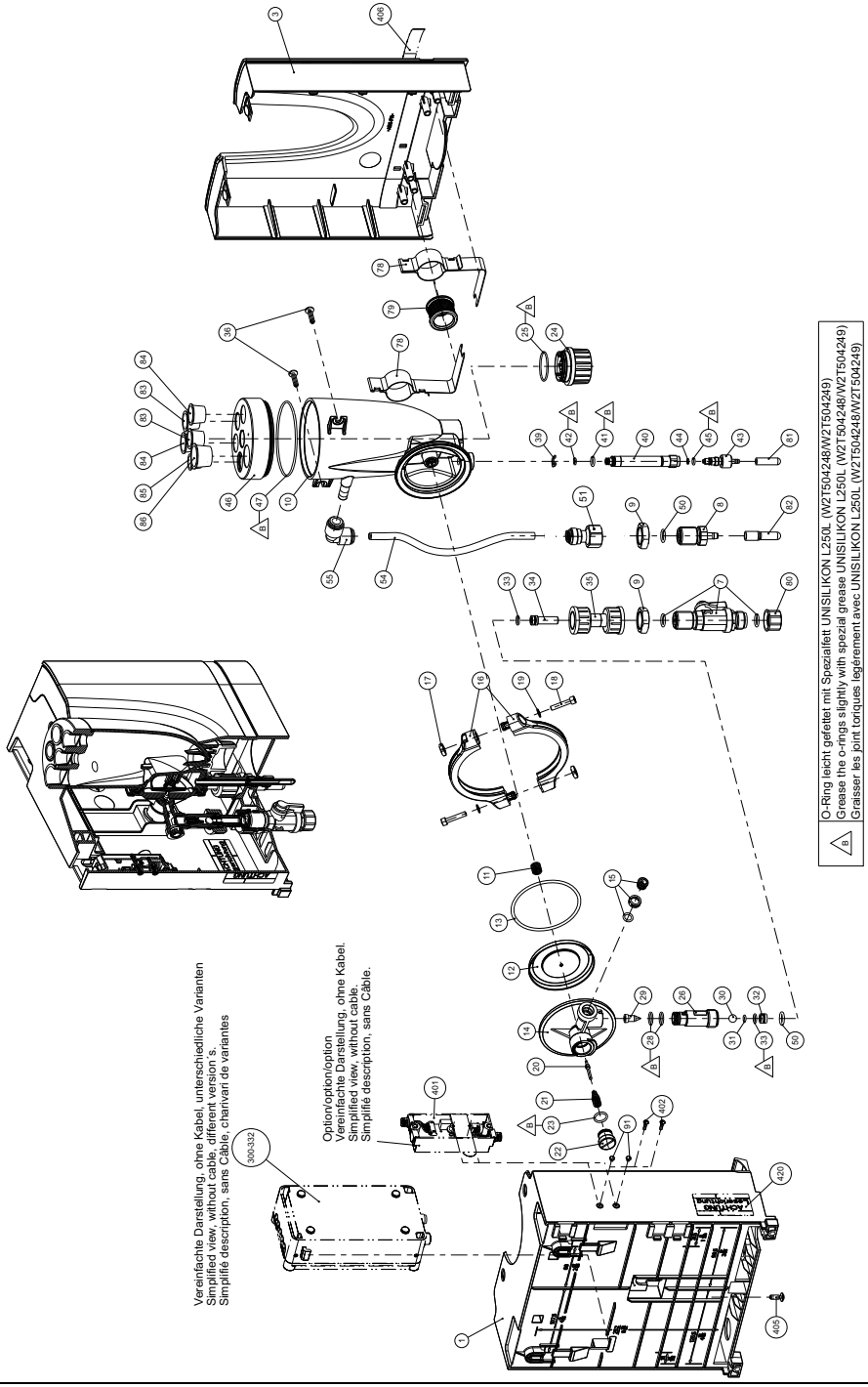
O-Ring leicht gefettet mit Spezialfett UNISILIKON L250L (W2T504248/W2T504249)
Grease the o-rings slightly with spezial grease UNISILIKON L250L (W2T504248/W2T504249)
Graisser les joint toriques legérement avec UNISILIKON L250L (W2T504248/W2T504249)
Option/option/option
Vereinfachte Darstellung, ohne Kabel.
Simplified view, without cable.
Simplifié description, sans Câble.
Vereinfachte Darstellung, ohne Kabel, unterschiedliche Varianten
Simplified view, without cable, different version's.
Simplifié description, sans Câble, charivari de variantes

7.3 DEPOLOX® Pool E flow cell - pressurized version

DEPOLOX® Pool E flow cell - pressurized version (module name D01) - W3T350214

Item	Part No.	Designation
1	W3T247776	Basic housing
2	W2T507548	Type plate
3	W3T247777	Housing cover
7	W3T166170	Shut-off valve
9	W2T507615	Flat nut
10	W3T158559	Cell body
11	W3T164226	Compression spring
12	W3T158569	Membrane unit
13	W3T160654	O-ring
14	W3T158595	Control valve body
15	W2T504209	Plastic cartridge
16	W3T160649	V profile clamp
17	W3T158567	Square nut
18	W2T504659	Cheese-head screw
19	W2T506019	Washer
20	W3T158572	Valve pin
21	W3T172795	Compression spring
22	W3T158573	Adjusting screw
23	W3T160357	O-ring
24	W3T160650	Flow distributor cap
25	W3T160655	O-ring
26	W3T160648	Check valve housing
28	W3T161396	O-ring
29	W3T169827	Cone
30	W3T172946	Ball
31	W3T172949	O-ring
32	W3T159707	Insert
33	W3T172975	O-ring
34	W3T168189	Fine filter
35	W3T158602	Filter unit
36	W2T505463	Pan head screw
39	W3T172041	Securing ring
40	W3T158576	Outlet drain pipe
41	W3T172997	O-ring
42	W3T164597	O-ring
43	W3T158575	Drain screw
44	W3T166160	EPDM flat gasket
45	W3T172556	O-ring
46	W3T320101	Cell body cover
47	W3T160657	O-ring
48	W3T161450	Plug
49	W3T168859	O-ring
50	W3T172861	O-ring
51	W2T863568	Adapter
54	W3T438413	Hose
55	W2T505093	Angle-reducing connector
78	W3T166169	Clip
79	W3T172045	Electrode mount
80	W3T161561	Screw cap
81	W3T168162	Protective cap
83	W3T161453	Protection plug
401	W3T183616	Conductivity measurement module SiDi-Sens
402	W2T807965	Plastic self-tapping screw A2 (10 mm)
405	W2T807968	Plastic self-tapping screw A2
406	W3T309477	Product strip
420	W2T507548	Type plate

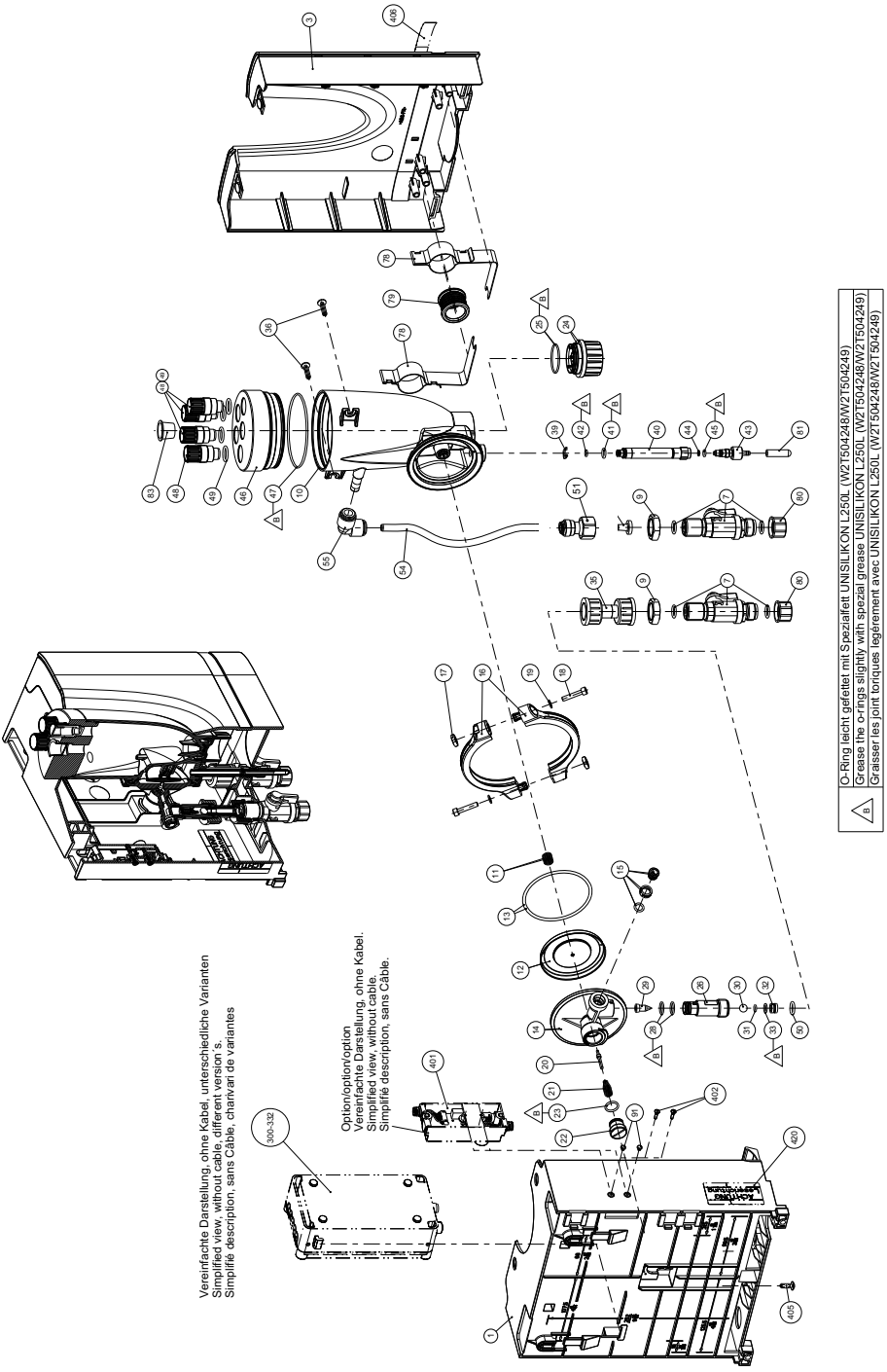
O-Ring leicht gefettet mit Spezialfett UNISILIKON L250L (W2T504248/W2T504249)
Grease the o-rings slightly with spezial grease UNISILIKON L250L (W2T504248/W2T504249)
Graisser les joint toriques legèrement avec UNISILIKON L250L (W2T504248/W2T504249)
Vereinfachte Darstellung, ohne Kabel, unterschiedliche Varianten
Simplified view, without cable, different version's.
Simplifié description, sans Câble, charivari de variantes
Option/option/option
Vereinfachte Darstellung, ohne Kabel.
Simplified view, without cable.
Simplifié description, sans Câble.

7.4 DFMe electronics module

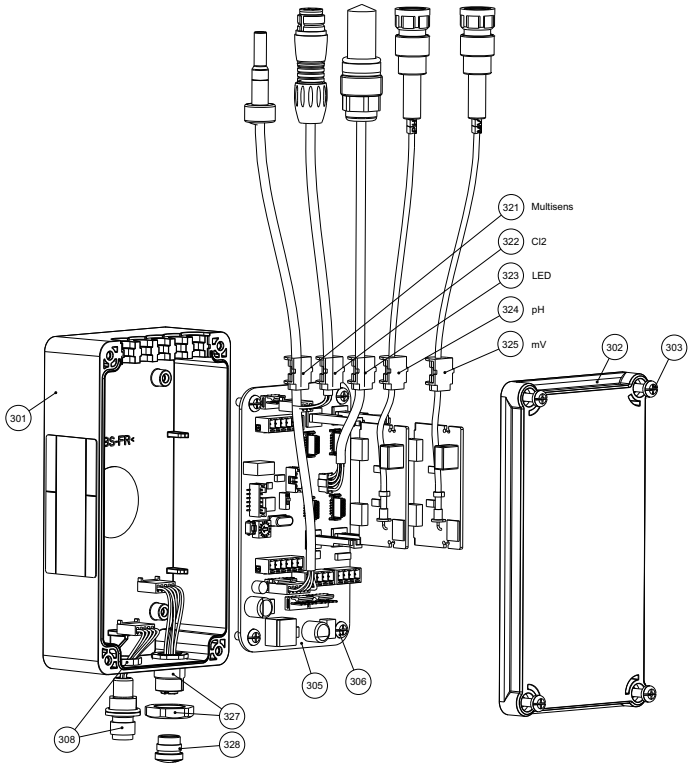

Item	Part No.	Desciption
	W3T320004	DFMe electronics module comprising: basic housing DFMe, DFMe Board DES and DFMe connection
301	W3T262803	Basic housing DFMe
302	W3T256343	Housing cover DFMe
303	W2T807967	Plastic self-tapping screw A2
305	W3T320085	Spare PCB, DFMe board DES
306	W2T504397	Plastic self-tapping screw d4x10
308	W3T263401	DFMe connection - M12 plug
321	W3T271603	Multi-sensor DFMe
322	W3T271602	Sensor cable DFMe - DES
323	W3T277062	LED glow stick complete; DFMe - LED
324	W3T320081	Spare part sensor card; DFMe-pH
325	W3T320082	Spare part sensor card; DFMe-mV
327	W3T308952	DFMe connection - M12 socket
328	W3T206059	Protective cap for jack M12x1, IP67
332	W2T507548	Type plate 68x35

7.5 Sensors

NOTICE

When disinfecting the inline electrolysis systems, the chlorine sensor and ORP (Redox) single-rod measuring chain must be used, gold version (gold electrode).

Designation		Chlorine sensor (free chlorine)	pH single-rod measuring chain	ORP (Redox) single-rod measuring chain	Conductivity sensor LF325
Sensor		-	W3T169297	-	W3T172052
	platinum version	W3T160652	-	W3T169298	-
	gold version	W3T160991	-	W3T172356	-
Sensor cable for chlorine sensor		W3T271602	-	-	-
Spare PCB, DFMe board DES		W3T320085	-	-	-
Plug-in card with sensor cable, DFMe		-	W3T320081	W3T320082	-
Conductivity measurement module SiDiSens		-	-	-	W3T183616
Sealing kit LF325, pressurized		-	-	-	W3T166180
KCl tank with stand and 5 ml KCl solution		W3T164482			-
Electrolyte solution 3 mole/l KCl, 250 ml		W3T160410			-
Electrode cleaning sand, white		W3T171317	-	-	-
Buffer solution pH 7.00					
	bottle 250 ml	-	W3T165076	-	-
	bag 12 ml	-	W3T161181	-	-
Buffer solution pH 4.65					
	bottle 250 ml	-	W3T165084	-	-
	bag 12 ml	-	W3T161189	-	-
Calibration solution 478 mV					
	bottle 250 ml	-	-	W3T165048	-
	bag 12 ml	-	-	W3T161182	-
Calibration solution 60 mS/cm					
	bottle 250 ml	-	-	-	W3T427608
	bottle 1000 ml	-	-	-	W3T161187
Measuring beaker (5 pcs)		W3T158600			

7.6 Membrane sensor

Part No.	Designation
W3T391563	Total chlorine membrane sensor TC3 CAN
W3T391564	Plastic membrane cap TC3 for use in total chlorine membrane sensor TC3 CAN. Notice: Please use at increased salt concentration (optional)!
W3T437804	CAN bus extension cable 1 m for total chlorine membrane sensor
W3T164339	Spare parts kit (incl. lapping paper, elastomer seal, O-ring)
W3T365500	Membrane cap
W3T171793	Electrolyte solution E-TC for total chlorine TC3 CAN

7.7 LED glow stick

Part No.	Designation
W3T277062	LED glow stick complete; DFMe - LED

7.8 CAN bus extension cable for connection to DFMe electronics module

Part No.	Designation
W2T504979	CAN bus extension cable 0.3 m
W2T504980	CAN bus extension cable 1.0 m
W2T504981	CAN bus extension cable 2.0 m
W2T504982	CAN bus extension cable 5.0 m
W2T504850	CAN bus extension cable 10.0 m

7.9 Instruction manual

Part No.	Designation
W3T321512	700 P electronics module, english
W3T321499	DEPOLOX® Pool E flow cell, english

7.10 Accessories

Part No.	Designation
W3T158721	Strainer with ball valve, straight
W3T389201	Set of fittings for strainer

Metric PVC tubing, fabric-reinforced (internal diameter x wall thickness)	ø 4 x 3	ø 6 x 3	ø 10 x 3
Tubing	W2T505524	W2T505525	W2T505334
PVC hose connecting parts comprising:	W3T167626	W3T167518	W3T167590
O-ring	W3T172861	W3T172861	W3T169068
Locking ring	W3T163417	W3T161436	W3T159622
Union nut	W3T161502	W3T161502	W3T167297
Hose bushing	W3T172945	W3T161501	W3T167293

Metric PE tubing (internal diameter x wall thickness)	ø 4 x 1	ø 6 x 1	ø 6 x 2	ø 10 x 2
Tubing	W2T507155	W2T505784	W2T505676	W2T505734
PVC hose connecting parts comprising:	W3T163752	W3T171453	W3T163796	W3T163825
O-ring	W3T172861	W3T172861	W3T172861	W3T169068
Locking ring	W3T172891	W3T169815	W3T163436	W3T163437
Union nut	W3T161502	W3T161502	W3T161502	W3T167297
Hose bushing	W3T172945	W3T161501	W3T161501	W3T167293

7.11 Retrofit kits/extensions

Part No.	Designation
W3T320090	Sensor measuring module DFMe Total chlorine TC3 CAN, non-pressurized version with CAN bus extension cable 1 m
W3T510332	Sensor measuring module DFMe Total chlorine TC3 CAN, pressurized version with CAN bus extension cable 1 m, incl. cell body cover, part. no. W3T417269 and gasket kit W3T158755
W3T417269	Cell body cover for sensor measuring module DFMe Total chlorine TC3 CAN - pressurized version, fully pressurized version comprising: cell body cover and gasket kit W3T158755
W3T320088	Sensor measuring module DFMe pH with plug-in card and calibration solution
W3T320089	Sensor measuring module DFMe ORP (Redox) with plug-in card and calibration solution
W3T320091	Sensor measuring module DFMe Conductivity LF325 with cable and calibration solution

NOTICE

The pressurized version can be retrofitted with the total chlorine membrane sensor TC3 CAN. Please note that the standard cell body cover must be replaced by an optional cell body cover, part no. W3T417269.

8. EC Declaration of Conformity and Certificate

EVOQUA WATER TECHNOLOGIES

EG Konformitätserklärung
EC Declaration of Conformity
Déclaration CE de conformité

Hersteller/Manufacturer/Constructeur: Anschrift/Address/Adresse:	Evoqua Water Technologies GmbH Auf der Weide 10, D-89312 Günzburg
Produktbezeichnung:	Durchfluss-Modul DEPOLOX® Pool E (D01) Durchfluss-Modul DEPOLOX® 5 E (D01) Durchfluss-Modul Strantrol® Pool E (D01) Durchfluss-Modul Blu-Sentinel™ Pro (D01)
Product description:	*DEPOLOX® Pool E (D01) Flow Block Assembly* *DEPOLOX® 5 E (D01) Flow Block Assembly* *Strantrol® Pool E (D01) Flow Block Assembly* *Blu-Sentinel™ Pro (D01) Flow Block Assembly*
Description du produit:	*Module de la cellule de mesure DEPOLOX® Pool E (D01)* *Module de la cellule de mesure DEPOLOX® 5 E (D01)* *Module de la cellule de mesure Strantrol® Pool E (D01)* *Module de la cellule de mesure Blu-Sentinel™ Pro (D01)*

Das bezeichnete Produkt stimmt in der von uns in Verkehr gebrachten Ausführung mit den Vorschriften folgender europäischer Richtlinien und Normen überein:
The product described above in the form as delivered is in conformity with the provisions of the following European Directives and Standards:
Le produit désigné est conforme, dans la version que nous avons mise en circulation, avec les prescriptions des directives et normes européennes suivantes:

Richtlinien/ *Directives*		Norm /*Standards / Normes*	Ausgabedatum / *Date*
EMV/EMC	2014/30/EU	EN 61326-1	2021 (additionally 2013)
NRL/LVD	2014/35/EU	EN 61010-1	2010
RoHS	2011/65/EU 2015/863/EU		

Bevollmächtigte Person für technische Unterlagen: Evoqua Water Technologies GmbH
Authorized person for the technical file: Auf der Weide 10
Personne désignée pour la documentation technique: D-89312 Günzburg

Günzburg, *23.OCT.2023*

Steffen Lange Geschäftsführer / *Managing Director*	Unterschrift *signature* / signature
Stefan Krüger Leiter QM / *Quality Manager*	Unterschrift *signature* / signature

Diese Erklärung bescheinigt die Übereinstimmung mit den genannten Richtlinien, ist jedoch keine Beschaffenheits- oder Haltbarkeitsgarantie nach §443 BGB. Die Sicherheitshinweise der mitgelieferten Produktdokumentation sind zu beachten.
This declaration certifies the conformity to the specified directives but does not imply any warranty for properties. The safety documentation accompanying the product shall be considered in detail..
La présente déclaration atteste de la concordance avec les directives citées, elle n'offre cependant pas de garantie quant à la nature ou la durabilité selon l'article 443 du code civil allemand. Les consignes de sécurité de la documentation du produit fournie sont à respecter.

No. MAE1563 Issue 06 / LAE7761.002

Certificate of Compliance

Certificate: 70027582 **Master Contract:** 226676

Project: 80174871 **Date Issued:** 2023-07-26

Issued To: **Evoqua Water Technologies GmbH**
Auf der Weide 10
Günzburg, Bavaria, 89312
Germany

The products listed below are eligible to bear the CSA Mark shown with adjacent indicators 'C' and 'US' for Canada and US or with adjacent indicator 'US' for US only or without either indicator for Canada only.

Issued by: Daniel Duguay
Daniel Duguay

C US

PRODUCTS
CLASS - C363106 - ELECTRICAL MEASUREMENT AND TEST EQUIPMENT Electrical Measurement and Test Equipment
CLASS - C363186 - ELECTRICAL MEASUREMENT AND TEST EQUIPMENT Certified to US Standards

Water management system, Models:

Main units: W3Ta E01 b; rated: 100-240Vac, 50/60Hz, 48W or 24Vdc, 30W /
W3Ta E02; rated: 100-240Vac, 50/60Hz, 24W **or** 24Vdc, 15W;
all models: 6A max rating including external loads supplied from the mains input circuit of the main units via cord outlets or permanently wired

Flow-through units: W3Tc D01 / W3Tc D02, supplied by the main units.

(Where a, b & c are alphanumeric placeholders (different length; including blanks) for non-safety-critical properties and configurations like user interface design and water analysis functions)

DOD 507 Rev. 2019-04-30 © 2018 CSA Group. All rights reserved. Page 1

NOTES

Wallace & Tiernan® worldwide

Australia
+61 1300 661 809
sales.au@evoqua.com

China
+86 21 5118 3777
sales.cn@evoqua.com

Germany
+49 8221 9040
wtger@evoqua.com

France
+33 1 82 20 01 81
wtfra@evoqua.com

UK
+44 300 124 0500
info.uk@evoqua.com

Indien
+91 44 6136 3100
sales.in@evoqua.com

Canada
+1 905 944 2800
wtoe.can@evoqua.com

Korea
+82 10 8596 4111
sales.kr@evoqua.com

Singapore
+65 6559 2600
sales.sg@evoqua.com

USA
+1 800 524 6324
wtsupport.us@evoqua.com



Auf der Weide 10, 89312 Günzburg, Germany

+49 (8221) 904-0 www.evoqua.com

In some countries, DEPOLOX and Wallace & Tiernan are trademarks of Evoqua, its subsidiaries or affiliated companies.

No part of this document may be reproduced in any form (printed, photocopy, microfilm, or any other procedure) or saved, processed, copied, or distributed using electronic data systems - without the express prior written consent of Evoqua Water Technologies GmbH.

All information in this document is considered reliable and corresponds to the generally applicable technical standards. Evoqua assumes no responsibility for the completeness of this information. Users are responsible for making sure that the product is suitable for specific applications. Evoqua assumes no liability for specific or indirect damage or consequential damage arising from the sale, resale or misuse of its products.

© 2025 Evoqua Water Technologies GmbH Subject to modifications

WT.050.810.020.DE.IM.0625
W3T321499 Issue 17-0625