evoqua
WATER TECHNOLOGIES



# WAFER® RANGE

# SPECTRA 3 4KW MEMBRANE

## INSTALLATION, OPERATION & MAINTENANCE MANUAL

## Document History:

| Issue | Creation Date | Created By |
|---|---|---|
| 1 | 03/06/2020 | James Ellis |
| 2 | 07/08/2020 | James Ellis |

Document History: 2
Health & Safety 6
Health and Safety Information 6
Introduction 8
An Introduction to UV Disinfection Systems 8
What is Ultraviolet (UV) Light? 8
How does UV Disinfection Work? 8
Safety Advantages of Evoqua UV Technology Disinfection 8
Terminology 9
Installation Guidelines 11
General Installation Guidelines 11
UV Chamber 11
UV Control Panel Installation Guidelines 16
WAFER® UV System Installation, Commissioning and Calibration 17
Specific Installation Guidelines 17
Environmental Conditions 17
WAFER® UV System Installation Considerations 17
Cable Recommendations 19
Panel Supply Loads 21
Installation Checklists 22
Commissioning 24
Commissioning Procedure Checklist 24
UV Commission Work Sheet 26
UV Sensor Calibration 27
WAFER® UV System Maintenance & Spares 28
Maintenance Schedule 28
Maintenance Log 28
Performance Monitoring 28
UV Lamp 28
Quartz Cleaning and Replacement 28
Seals 28
Control panel 28
Twistlok System Maintenance 29
UV Sensor Maintenance 31
UV Sensor Maintenance 32
Automatic Wiper System Maintenance 33
Spare Parts 37

General Assembly ..... 37
Lamp & Quartz Assembly ..... 38
UV Window Assembly ..... 39
Automatic Wiper Drive Assembly ..... 41
Single-Lamp Automatic Wiper Carriage Assembly ..... 42
Multi-Lamp Automatic Wiper Carriage Assembly ..... 43
Maintenance Spares List ..... 44
ATUV-1040 Automatic Quartz Wiping System ..... 46
General Operation ..... 46
LED Indicators & Push Buttons ..... 46
Connection Diagrams ..... 47
DIP-Switch Settings ..... 48
Calibration ..... 49
Run ..... 49
Service Position ..... 49
TroubleShooting ..... 50
Maintenance Advice ..... 51
Spectra 3 Membrane Operation V2 ..... 52
Spectra Membrane Control System ..... 52
Components ..... 52
Start-up Sequence ..... 64
Spectra Operation ..... 65
Main Screens ..... 65
Fault Screens ..... 67
Operator Menu Screens ..... 69
Setup Menu Screens ..... 71
Navigating the Setup Screen ..... 72
Setup Menu - Parameter Descriptions ..... 73
Integration ..... 86
Analogue Inputs ..... 86
Analogue Outputs ..... 86
Digital Inputs ..... 87
Remote Start/Stop ..... 87
External Low Power Switching ..... 87
Digital Outputs ..... 89
Open Valve ..... 89
Bleed Valve ..... 89
MODBUS Communication ..... 90

Introduction ..... 90
Supported Interface ..... 90
Physical Connection ..... 91
Data Transmission ..... 93
Message Structure ..... 95
Data Storage ..... 97
Full Register Map ..... 97
Trouble Shooting ..... 103
..... 112

# Health & Safety

## Health and Safety Information

Only suitably qualified personnel should operate/maintain the system - always follow safe working practices and do **NOT** take risks.
If in doubt always **ASK**, or for further information visit our website: www.Evoqua.com

| | |
|---|---|
|  | **All personnel involved in the installation, maintenance and operation of the UV system should read the relevant manual.** |
|  | **Electrical Safety**<br>**WARNING: Always ensure electrical plant or equipment is isolated before carrying out maintenance.** |
|  | **Electrical Ground / Earth**<br>**WARNING: All equipment must be Grounded / Earthed.** |
|  | **Hot Temperature**<br>**CAUTION: Chamber can be hot.**<br>**Allow 15 minutes for lamps and other components to cool down before removal.** |
|  | **Process Isolation - Fluid**<br>**WARNING: Always fully isolate the system from the process before carrying out maintenance.**<br>**DANGER: Failure to follow the correct procedures can cause serious injury or death due to forcible ejection of materials from the UV chamber.** |
|  | **Process Isolation - Wiper**<br>**CAUTION: Contact with moving parts can cause injury, for example trap fingers, clothing may become caught in moving parts of machinery, drawing in operatives.** |
|  | **Ultraviolet Light**<br>**WARNING: Do not expose skin or eyes to ultraviolet light.**<br>**CAUTION: Do not touch lamps immediately after operation. Allow 15 minutes for lamps and other components to cool down.** |

| | |
|---|---|
|  | **Quartz Components**<br>**CAUTION: Handle quartz components with care to avoid breakages.** |
|  | **Mercury - Lamp Breakage**<br>**CAUTION: Lamps contain Mercury take care to avoid breakages. If a breakage occurs follow mercury spillage procedure below.** |
|  | **Lamp Recycling**<br>**Always recycle UV lamps properly and safely.** |

| **Mercury Spillage** | |
|---|---|
| Anticipate this event by collecting together a spill kit. Spill kits are commercially available; however most contain the following components: | 1. Latex barrier gloves<br>2. Sealable plastic bag<br>3. Soft cloth, or cardboard rectangle<br>4. Syringe or pipette<br>5. Small brush, barrier foam or duct tape<br>6. Powdered Sulphur. |
| Mercury spillage procedure: | 1. Put on Latex gloves<br>2. Collect quartz pieces, place in cloth in sealed bag. Mark bag as “sharp hazard”<br>3. Locate mercury ball. Use brush to aggregate smaller balls into large ball<br>4. Use syringe to draw up mercury bead. Transfer mercury onto paper towel, place inside sealed bag. Mark bag as “mercury hazard”<br>5. Use barrier foam or duct tape to collect remains of mercury - dispose of as detailed in point 4.<br>6. Consult site regulations regarding notification of a mercury spill. A UV lamp contains a maximum of 300 mg of mercury<br>7. Powdered Sulphur is optional - it can make collection of very small mercury balls easier. |

# Introduction

## An Introduction to UV Disinfection Systems

Unlike chemical approaches to water disinfection, Ultra Violet (UV) light provides a rapid and effective method to disinfect water and other liquids.

### What is Ultraviolet (UV) Light?

UV light is a form of light that is invisible to the human eye, and is classed as a non-ionising (or non-radioactive) radiation. It occupies the portion of the electromagnetic spectrum between X-rays and visible light.

### How does UV Disinfection Work?

A unique characteristic of UV light is that a specific range of its wavelengths (those between 200 and 300 nm [billionths of a metre]) are categorized as germicidal – meaning that UV light damages the DNA and RNA of microorganisms and prevents them from causing infection. This capability has allowed widespread adoption of UV light as an environmentally friendly, chemical-free, and highly effective way to disinfect liquids.

### Safety Advantages of Evoqua UV Technology Disinfection

- UV is a chemical-free process that adds nothing to the water except UV light.
- UV requires no transportation, storage or handling of toxic or corrosive chemicals – a safety benefit for plant operators and the surrounding community.
- UV treatment creates no carcinogenic disinfection by-products that could adversely affect the quality of the treated water.
- UV is highly effective at inactivating a broad range of microorganisms including chlorine-resistant pathogens like Cryptosporidium and Giardia.
- UV can be used (alone or in conjunction with hydrogen peroxide) to break down toxic chemical contaminants while at the same time performing disinfection of the treated water.

### Evoqua UV Technology Disinfection Systems

**The main features of the Evoqua UV system are:**

- UV Reactor: stainless steel reactor inside which water is exposed to UV light for disinfection.
- UV Lamps: emit high-intensity UV light; housed inside chamber and protected by quartz sleeve.
- Control Panel: contains electronics for system; controlled through user interface on outside.
- Wiper: motorised system used to clean lamp sleeves.
- UV Sensor: monitors UV intensity inside chamber and feeds readings back to control panel.
- Temperature Sensor: monitors temperature of reactor to protect people and equipment if the water flow is interrupted unexpectedly.
- Note: not all systems are fitted with Wiper, UV Sensor and Temperature Sensor.

## Terminology

The following terminology is used throughout this Manual:

| Term | Description |
|---|---|
| **Control Panel** | Contains control and power electronics for UV system |
| **ATUV-1220** | I/O module |
| **AT-463** | 4-20mA UV sensor used to measure the UV intensity and so report on the performance of the system. |
| **AT-900** | 4-20mA Validated UV Sensor |
| **Bank** | The term used to describe 2 lamps running in series powered by a single power supply |
| **Isolator (MCCB)** | Disconnects system from power supply |
| **MCB** | Miniature circuit breaker |
| **Electronic Ballast** | Power supply used to control the starting voltage of the UV lamp and regulate the operating current |
| **Wiper** | Cleaning system for UV Lamp sleeves; may be manual or automatic |
| **Spectra** | Electronic control systems used for monitoring and control of UV treatment |
| **UV Sensor** | Component for continuous measurement of the UV-C intensity inside the reactor |
| **UV Reactor** | Comprising a single chamber in which water is treated by UV irradiation, and the associated inlet and outlet valves, components and instruments |
| **Restrike Timer** | Timer used by the control system to allow the lamps to cool after stopping, during this time the lamps are inhibited from starting |
| **Start-up Mode** | Period between switch on of the UV system and running mode |

| Term | Description |
| --- | --- |
| **Running Mode** | When all lamps are struck and the dose reading has exceeded the minimum Dose level |
| **Lamp Power** | Electrical Power rating of UV Lamp |
| **Dose** | Calculation of the amount of UV treatment the water is receiving, based on UV intensity and flow rate |
| **UV Intensity** | A measurement of the strength of the Ultraviolet (UV) radiation given off from the UV lamps |
| **UVC** | A region in the electromagnetic spectrum. Wavelength range 200-280 nm |
| **UVT** | Ultraviolet transmissivity of the water undergoing treatment |
| **Validated** | Certified envelope of operation of UV Reactor, comprising for example flow, UVT |

# Installation Guidelines

## General Installation Guidelines

The guidelines in this section are designed to assist in the installation of an Ultraviolet Disinfection system into a typical plant. The recommendations below are **NOT** definitive. Depending on the installation, it may be necessary to install contrary to specific recommendations. If at any stage you are unsure as to any aspect of these instructions, consult with a specialist installation contractor. Please also make use of the Installation and Commissioning Checklists later in this manual section.

**Please be aware:**

- The manufacturer cannot accept responsibility for any installation carried out by other parties.
- When planning or executing any installation ensure all local Health & Safety Regulations are followed, local codes complied with and implement all appropriate risk assessments.
- Always allow a footprint around the chamber and control panel to allow safe work and access.

### UV Chamber

#### Location of UV Chamber – Process Considerations

1. Unless there are other process considerations the UV unit should be located as close to the point of use as possible.
2. The UV system is normally installed after all other physical or conventional water treatment equipment (filters, softeners, de-mineralization etc.). The effectiveness of UV treatment is dependent upon water clarity and removal of the majority of suspended solids will reduce fouling of quartz sleeves and thimbles. However, for certain process requirements and considerations, the UV unit may need to be installed 'up front' and before some or all of the treatment equipment.
3. If chemical dosing is utilized to provide a residual, this should be installed downstream of the UV chamber. This will reduce chemical reduction by the UV system and will prolong the chamber life.

## Location of UV Chamber – Mechanical Considerations

1. Allow sufficient room for removal and replacement of lamps, quartz sleeves / thimbles and wiper components (where fitted).
2. Ensure the UV Chamber location does not prevent safe maintenance of existing equipment.
3. Ensure that all equipment and pipe work will be adequately supported when installed. The UV chamber should not be used to support the pipe work, or else this may damage the UV chamber.
4. Avoid locating chambers and panels under dripping pipe work or chemical equipment and avoid storing chemicals that can lead to corrosion of system components, close to the UV equipment.
5. To minimize flow interruption and where process considerations allow it, a by-pass should be installed around the UV chamber.
6. Plan a drainage route for the equipment to the plant room main drain. It is good practice to install lockable ball valves on the drain and vent to aid maintenance.
7. The preferred material for the connecting pipework is stainless steel (either 304 or 316L grade), although straight pipe sections of uPVC may be connected direct onto the UV chamber, provided they are a minimum Class 'E' (BS 3505). These materials should be used for a minimum straight section of 1000 mm, if the pipe is 6" or greater in diameter. If the pipe is less than 6" in diameter a minimum straight section of 500 mm should be used. ABS should not be used. If plastic pipe is used, the same size connection should be used for the connecting pipework. **Reducing pipework connection size directly onto the UV chamber is not recommended!**
8. If the pipe is 6" or greater in diameter, any elbows within 1000 mm of the UV chamber must be stainless steel. If the pipe is less than 6" in diameter, any elbows within 500 mm of the UV chamber must be stainless steel
9. If the pipe is 6" or greater in diameter, any valves within 1000 mm of the UV chamber should have a stainless-steel disc (or other metal) and should not coated with a polymer material. If the pipe is less than 6" in diameter, any valves within 500 mm of the UV chamber should have a stainless-steel disc (or other metal) and should not be coated with a polymer material.
10. Do not install in direct sunlight and protect from extremes of environment (Weather, High Humidity, High or Low Temperatures).
11. Where cable lengths exceed the distance between the control panel and UV chamber, ensure these are not coiled as this could create un-wanted noise on the signal cables, and in the case of lamp cables, a voltage drop may result. Please contact Evoqua UV for further information.

## Location of UV Chamber – Airlocks/ Water Hammer

1. Install the pipe work in such a way that the UV Chamber always remains flooded. If the chamber drains down, the mechanical shock when full flow is regained may damage the quartz components
2. If it is not possible to ensure the chamber remains flooded due to its location, air release and check valves can prevent emptying and draining of the system. Discuss this with your installer
3. The chamber should not be allowed to drain when not in use as this can damage internal components
4. Avoid excessive water hammer as this can damage quartz components. Avoid locating the chamber close to the outlet side of a pump. If this is unavoidable, installing a 'soft start' on the pump can reduce the chance of quartz breakages
5. On installations where the chamber and / or pipe work cannot remain flooded, a bypass should be installed where it can be easily operated. This should be opened when flow is restarted otherwise lamp and quartz breakage may occur. (Flow restarting can mean the pump starting, a backwash cycle or movement of another valve).

## Location of UV Chamber – Special Considerations for Drinking Water Treatment Plants

1. As per the UVDGM guidelines, it is a requirement for all Validated systems to install a straight piece of pipe with a minimum of 5 pipe diameters upstream of the chamber to ensure good flow characteristics through the chamber, as shown in the example installation diagrams on the following page.

## Chamber Orientation

1. Ensure the temperature probe (if fitted) is located on the top of the UV system.
2. Ensure the air vent (if fitted) is located on top of the UV system.
3. Install the system so that both the temperature probe and the UV monitor can be installed and maintained.
4. Ensure the lamps and sleeves can be removed, and service access is considered for the UV system and adjacent equipment.
5. UV lamps should be installed horizontally for both vertical pipe and horizontal pipe configurations, unless otherwise specified.

### Cross Flow Chamber Installation Example

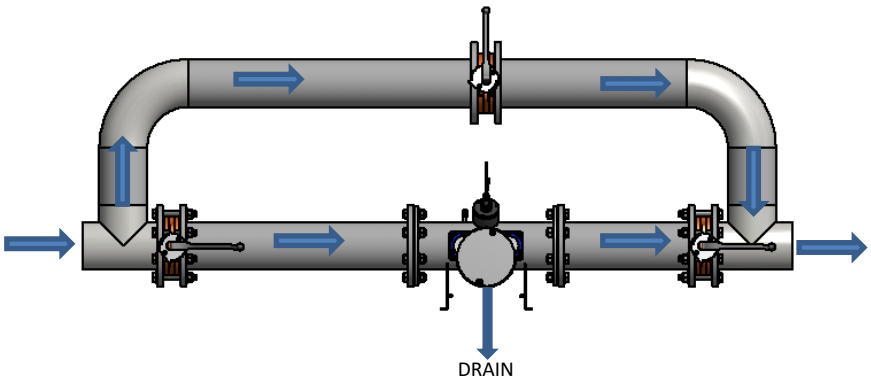


**Note**: Chamber can be positioned vertically ensuring the lamps remain horizontal

### Axial Flow Chamber Installation Example

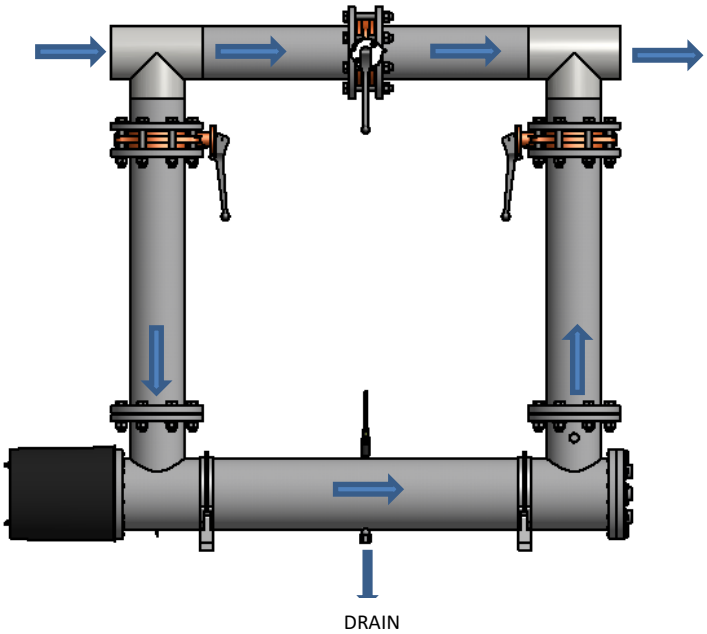

## Temporary Basket Strainer Installation (Optional)

1. These should be located after the UV unit. Where the temporary basket strainer is of a larger micron rating than the upstream filtration then regular access to the strainer should not be required. However the strainer should be accessible if necessary.
2. We recommend installing this device after the UV system in a spool piece, which can be removed for maintenance in the orientation shown in the diagram below. If the UV chamber is mounted in a vertical section of pipe work, it is recommended that a point of access be provided to the pipe section below the chamber, in order to remove any quartz shards which have dropped through it.

### Diagram of Strainer Installation

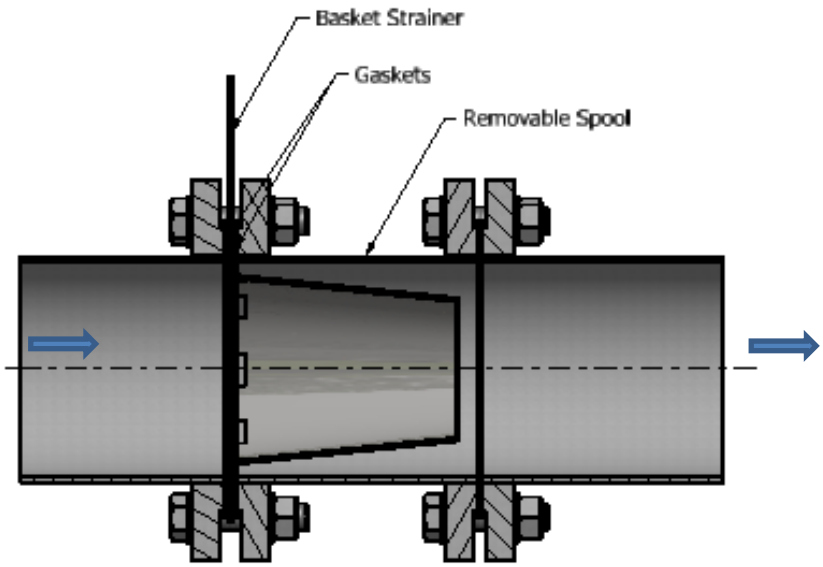

## UV Control Panel Installation Guidelines

1. Complete the Installation and Commissioning Checklists later in this manual section to ensure proper installation and safe work.
2. Locate the panel as close as possible to the chamber

**Note:** The control panels vary in size & weight (<100kg), recommended 2-person handling (lifting) when moving or installing the control panel. Lifting eyes to be used where provided.

3. Ensure that the floor/wall structure is able to withstand the weight of the enclosure. For wall mounted panels, secure the enclosures to the mounting surface with hardware as appropriate for the application used using the 4 x mounting lugs provided.
4. Ensure the correct supply is available on site and the correct supply cable is used. If the correct voltage is not available, a Step Up / Step Down transformer may be needed - please contact your supplier for details.
5. Ensure the correct circuit breaker size and type is available for the unit (see the Cable Recommendations subsection of this manual). If the suggested breaker is installed, then sufficient discrimination should be ensured.
6. Ensure that the UV chamber and the control panel are correctly earthed / grounded – an Earth / Ground point and cable is fitted & supplied to all UV chambers.
7. The panel must be firmly mounted against a vibration free wall or suitable supporting frame.
8. Ensure panel fans (if fitted) are not obstructed. It is recommended to change or clean the filter media once construction on a project has finished.
9. Do not install in direct sunlight and protect from extremes of environment (Weather, High Humidity, High or Low Temperatures).
10. Install control panel display at eye level.
11. Do not locate the control panel in areas where it may be subjected to chemical or water leaks.
12. If the panel is floor mounted ensure that the panel is not located in a potential flood area.
13. Ensure the correct control panel is matched with the appropriate chamber. The chamber can be identified by an engraved serial number located on a fixed flange of the chamber. The panel can be identified by the label on the inside the door. These two codes should match exactly (e.g. C12345-A).
14. For lamp cables that require earthing, ensure the cable braiding has been screened or exposed and connected/clamped into each lamp earth terminal/busbar (if provided). Refer to images below.

**NOTE:** For cables being clamped onto the busbar using the shield connection clamps provided, ensure the maximum torque does not exceed 0.6Nm.

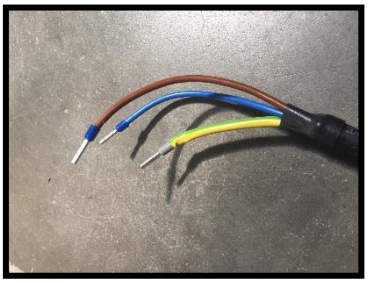

**Screened Lamp Cable (for connecting into Terminals)**




**Screened Lamp Cable (for Clamping on Busbar)**

# WAFER® UV System Installation, Commissioning and Calibration

## Specific Installation Guidelines

### Environmental Conditions

Unless otherwise agreed the following environmental conditions should be met:

| Condition | Range |
|---|---|
| Ambient Temperature | 0 – 45 °C (32 – 113 °F) |
| Relative Humidity | < 90% |

### WAFER® UV System Installation Considerations

#### Air Release Valve

An automatic release valve will be supplied with the system as standard. If the UV chamber is installed in the horizontal orientation (with the lamps remaining horizontal), it is highly recommended that the air release valve is installed in the vent on the top of the chamber to allow any trapped air to be released.
If the UV chamber is to be installed in the vertical orientation (with the lamps remaining horizontal), the air release valve must **NOT** be installed.

#### Lamp Orientation

UV Lamps should ALWAYS be installed horizontally.

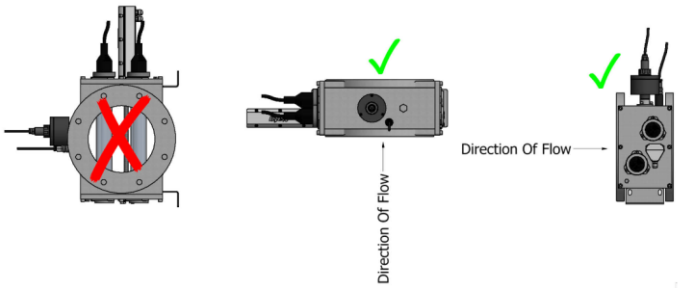


#### Maintenance Distances

Allow sufficient space for removal & replacement of lamps, quartz sleeves / thimbles & wiper components (refer to the CGA drawing for correct Quartz / Lamp extraction distances).

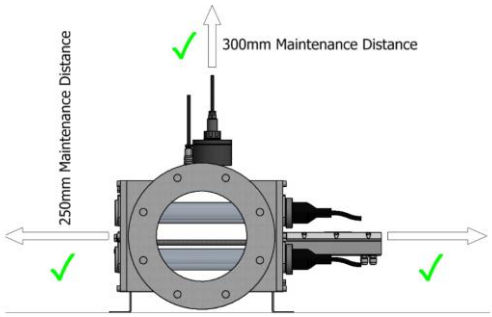

## NSF/ANSI 50 Product Information

### Product Flowrate Information Table

| System | Max Flow (m3/hr) | Default Fixed Flow Rate (m3/hr) | Flowrate ($m^3$/hr) | | | | | | | |
|---|---|---|---|---|---|---|---|---|---|---|
| | | | 50 | 90 | 140 | 200 | 250 | 380 | 450 | 700 |
| | | | Headloss (mbar) | | | | | | | |
| WF-115-3-N [2] | 50 | 38 | 37.7 | - | - | - | - | - | - | - |
| WF-115-4-N [2] | 90 | 65 | 13.7 | 47.0 | - | - | - | - | - | - |
| WF-125-6-N [2] | 140 | 112 | 1.8 | 5.5 | 12.9 | - | - | - | - | - |
| WF-215-6-N [2] | 200 | 147 | 1.8 | 5.5 | 12.9 | 25.7 | - | - | - | - |
| WF-215-8-N [2] | 250 | 184 | 0.8 | 2.4 | 5.7 | 11.3 | 17.4 | - | - | - |
| WF-225-8-N [2] | 380 | 252 | 0.8 | 2.4 | 5.7 | 11.3 | 17.4 | 39.0 | - | - |
| WF-230-10-N [1] | 450 | 360 | 0.3 | 0.8 | 1.8 | 3.5 | 5.2 | 11.3 | 15.4 | - |
| WF-430-10-N [1] | 700 | 560 | 0.3 | 0.8 | 1.9 | 3.6 | 5.2 | 11.7 | 16.1 | 36.3 |

### Disinfection Efficacy

[1] This unit has demonstrated an ability to provide three log inactivation of Pseudomonas aeruginosa and Enterococcus faecium. This product is designed for supplementary disinfection and is intended for use with appropriate residual levels of EPA registered disinfecting chemicals. Specific residual levels of EPA registered disinfecting chemicals may be required by the regulatory agency having authority.

[2] This unit has been tested to confirm a minimum inactivation equivalent of 3 log (99.9%) C. parvum in accordance with NSF/ANSI/CAN 50 and the US EPA UV DGM. This product has met the requirements of NSF/ANSI/CAN 50, Section N-8.1: Disinfection Efficacy, for the ≥ minimum of a 3 log (99.9%) reduction of Enterococcus faecium [ATCC #6569] and Pseudomonas aeruginosa [ATCC #27313]. This product is intended for secondary disinfection and is intended for use with appropriate residual levels of EPA registered disinfecting chemicals. Specific residual levels of EPA registered disinfecting chemicals may be required by the regulatory agency having authority

### Validation Information

The validation utilized MS2 and T1 phage as test organisms and ran from 70 to 99% UVT. The test organisms were correlated to C. parvum using the methods outlined in the USEPA 'Ultraviolet Disinfection Guidance Manual' (UVDGM) and in the USEPA 'Innovative Approaches to UV Validation' technical documents.

### Product Flowrate vs Intensity Information Table

| Intensity Required for 3 Log Crypto Reduction W/m2 | | | | | | | | | | | | | | | | | |
|---|---|---|---|---|---|---|---|---|---|---|---|---|---|---|---|---|---|
| Flow m3/hr | 10 | 30 | 50 | 70 | 90 | 100 | 120 | 140 | 160 | 180 | 200 | 220 | 240 | 260 | 300 | 340 | 380 |
| WF-115-3-N | 28.9 | 86.8 | 145 | - | - | - | - | - | - | - | - | - | - | - | - | - | - |
| WF-115-4-N | 17.1 | 51.4 | 85.6 | 120 | 154 | - | - | - | - | - | - | - | - | - | - | - | - |
| WF-125-6-N | 2.0 | 6.0 | 9.9 | 13.9 | 17.9 | 19.9 | 23.8 | 27.8 | - | - | - | - | - | - | - | - | - |
| WF-215-6-N | 2.4 | 7.1 | 11.8 | 16.6 | 21.3 | 23.7 | 28.4 | 33.1 | 37.9 | 42.6 | 47.3 | - | - | - | - | - | - |
| WF-215-8-N | 1.9 | 5.6 | 9.3 | 13.1 | 16.8 | 18.7 | 22.4 | 26.2 | 29.9 | 33.7 | 37.4 | 41.1 | 44.9 | - | - | - | - |
| WF-225-8-N | 1.9 | 5.6 | 9.3 | 13.1 | 16.8 | 18.7 | 22.4 | 26.2 | 29.9 | 33.7 | 37.4 | 41.1 | 44.9 | 48.6 | 56.1 | 63.6 | 71.1 |

## Cable Recommendations

Below are recommendations for a cable/circuit breaker:

- Un-bunched installed in trunking/cable tray
- Installed in an ambient temperature of 0…45ºC
- Installed as close to the control panel as possible

If there are any other specifications that are in place that does not meet this criteria, please contact Evoqua UV for further information.

| Model | No. of Lamps | Lamp Power | Cable to Panel from Distribution | Breaker in Distribution Panel |
|---|---|---|---|---|
| WF-115-* | 1 | 1.5kW | 2.5mm$^2$c.s.a., 600/1000V,<br>3-Core cable (L, N & E)<br>Steel Wire Armour Cable with Weatherproof Gland | 20Amp<br>Type “D” Circuit Breaker |
| WF-125-6 | 1 | 2.5kW | 4.0mm2c.s.a. , 600/1000V,<br>3-Core cable (L, N & E)<br>Steel Wire Armour Cable with Weatherproof Gland | 30Amp<br>Type “D” Circuit Breaker |
| WF-215-* | 2 | 1.5kW | 4.0mm$^2$c.s.a. , 600/1000V,<br>3-Core cable (L, N & E)<br>Steel Wire Armour Cable with Weatherproof Gland | 30Amp<br>Type “D” Circuit Breaker |
| WF-225-* | 2 | 2.5kW | 4.0mm2c.s.a. , 600/1000V,<br>3-Core cable (L, N & E)<br>Steel Wire Armour Cable with Weatherproof Gland | 32Amp<br>Type “D” Circuit Breaker |

| Model | No. of Lamps | Lamp Power | Cable to Panel from Distribution | Breaker in Distribution Panel |
|---|---|---|---|---|
| WF-230-10 | 2 | 3.0kW | 4.0mm2c.s.a. , 600/1000V,<br>4-Core cable (3ph, E) | 30Amp<br>Type “D” Circuit Breaker |
| WF-430-12 | 4 | 3.0kW | 6.0mm2c.s.a. , 600/1000V,<br>4-Core cable (3ph, E) | 40Amp<br>Type “D” Circuit Breaker |

* Chamber allows for multiple inlet/outlet sizes

**WARNING! Always ensure cables are installed with adequate mechanical protection!**

**Disclaimer:** These cable recommendations are sized based on the maximum load of the system, therefore fault protection/discrimination should be assessed depending on the site installation and local regulations. **Evoqua UV Technology** is not responsible for any unsafe work practices, procedures, actions or inactions taken by the client during the installation.

## Panel Supply Loads

Please refer to table below for approximate supply loads for each model.

| Model | No. of Lamp Drivers | Lamp | | | Supply Loads | | | | | | | | |
|---|---|---|---|---|---|---|---|---|---|---|---|---|---|
| | | Power (W) | Nominal Voltage (V) | Nominal Current (A) | 200V | 208V | 220V | 230V | 240V | 380V | 400V | 415V | 480V |
| WF-115-* | 1 | 1500 | 160 | 7.5 | 9A | 8A | 8A | 8A | 7A | 6A | 5A | 5A | 4.5A |
| WF-125-6 | 1 | 2500 | 280 | 7.5 | 14A | 14A | 13A | 12A | 12A | 9A | 8A | 7.5A | 7A |
| WF-215-* | 1 | 1500 | 160 | 7.5 | 17A | 16A | 15A | 15A | 14A | 11A | 9.5A | 8.5A | 8A |
| WF-225-8 | 2 | 2500 | 280 | 7.5 | N/A | 27A | 25A | 24A | 23A | 16A | 14A | 13A | 12A |
| WF-230-10 | 2 | 3000 | 400 | 7.5 | N/A | | | | | 20A | 19A | 18A | 17A |
| WF-430-12 | 4 | 3000 | 400 | 7.5 | N/A | | | | | 30A | 28A | 26A | 24A |

* Chamber allows for multiple inlet/outlet sizes

**Note:** The supply loads provided are based on the maximum load of the system (i.e full power).

## Installation Checklists

### General Installation Checklist

| | |
|---|---|
| **Inspect the goods** to ensure no damage has occurred in transit.<br>Check that that all ordered items are present. | |
| **Match the chamber and panel** - if multiple systems are delivered to the same site please ensure that the serial numbers match. | |
| **Install the control panel** as described in the Control Panel Installation Guidelines | |
| **Run the cables** in accordance with local regulations.<br>(Do not pull cables tight around sharp corners as this may affect the performance and reliability of the system, segregate cables, do not cable tie together.) | |
| **Cabling required from Control Panel to Chamber**:<br>• Lamp Cable - 1 per lamp, supplied as standard<br>• Earth Cable 1 core - supplied as standard<br>• Temperature Probe Cable - 1 per probe, supplied as standard<br>• UV Probe Cable - 1 per probe, supplied as standard<br>• Wiper Cables, supplied as standard<br>➢ Opto Cable<br>➢ Wiper Motor Cable | |

### Chamber Installation Checklist

| | |
|---|---|
| **Connect Earth/Ground cable** from the boss on the chamber to the control panel ground/earth point. | |
| **Install the temperature probe** by screwing the AT487- temperature probe into the boss on the top of the chamber. Connect the temperature probe cable. | |
| **Install UV Probe**<br>Insert the UV probe/s supplied into the UV housing/s located on the chamber<br>Connect the UV Probe cable. | |
| **Check the quartz sleeve/seal**<br>Prior to flooding, remove the lamp covers and check the quartz sleeve/thimble is not damaged as per the Maintenance section of this manual. | |
| **Install the lamp/s** and make the electrical connections<br>Check that the correct lamp is used, visually checking the lamp for any damages. If more than 1 lamp is fitted ensure the lamps are fitted in order (i.e. lamp1 then lamp2 etc.) | |

### Control Panel Installation Checklist

| **Before the power supply** to the panel is switched on: | |
|---|---|
| Connect the Earth/Ground cable from the chamber to the terminal provided in the panel. | |
| **Connect the Temperature probe and UV probe** as per the schematic; this is usually on a terminal strip at the bottom of the panel. Adjacent numbers relate to the connections of the probe wires<br>If more than 1 probe is fitted ensure that probe 1 “monitors” the first lamp | |
| **Connect the lamp cables** as per the schematic; this is usually on a terminal strip at the bottom of the panel. Adjacent numbers relate to the connections of the lamp cable cores. See electrical schematic for more information | |
| **Connect the wiper cables** as per the schematic; the wire numbers from the wiper mechanism relate to the numbers on the terminal strip. See electrical schematic for more information. Consult Wiping System section for more details on wiper.<br>Note: The wiper is factory calibrated. Please ensure the cables are connected before turning the board on or the wiper will lose its calibration and will require recalibration. | |
| **Connect the Customer I/O** – Connect the digital/analogue I/O as required. Please refer to the Control Operation section of the manual | |

## Commissioning

Use the Commissioning Procedure Checklist to safely put the unit into operation. The following steps should also be taken:

1. The pipe work and UV systems should be filled with water and excess air vented. Check for leaks
2. For commissioning the flow rate of liquid to cool the lamps should be at least 1 $m^3$/hr (4 gpm) per kW to cool the lamps
3. After lamps have been switched off wait 15 minutes to allow them to cool before attempting to restart - frequent start / stop cycles will shorten lamp life.

|  | **WARNING!** |
|---|---|
| | Only switch the unit on when the dust cover is fitted. |

### Commissioning Procedure Checklist

| | |
|---|---|
| Ensure the unit has been installed as per local regulations and according to the Installation Guidelines | |
| **Check that the incoming mains connections are correct**:<br>Single Phase Neutral and Earth,<br>2 Phase (Neutral) and Earth,<br>3 Phase (Neutral) and Earth,<br>Please check the electrical schematics to verify what power supply is required | |
| **Ensure quartz and lamps are installed** and waterproof | |
| **Ensure Temperature and UV Intensity probes are installed** and connected to their corresponding terminals in the control panel | |
| **Ensure Lamp cables are installed** and connected to their corresponding terminals in the control panel | |
| **Ensure the earth/ground cable** is connected from the chamber to the terminal provided in the panel. | |
| **Ensure full flow through the reactor** is available and any air trapped at the top of the reactor is released | |
| **Turn on the power** at the distribution source | |
| **Check that the voltage** on the incoming side of the Isolator is correct and record this in the UV Commission Work Sheet that follows this section | |

| | |
|---|---|
| **Test temperature sensor** by disconnecting the probe on the chamber; a fault should be displayed. Reconnect the probe and clear the fault (refer to the Control Operation section for more details). | |
| **Time & Date** - verify that the time and date are set correctly and adjust if necessary (see Operation section for more details). | |
| **Check that the system variables** are set as required i.e. Fixed Flow Rate – consult the System Databook for more details | |
| **Check lamp fault** – without turning on the lamp MCBs, start the system; a lamp fault should be displayed. Clear the fault (see Operation section for more details). | |
| **Turn on the Lamp MCBs** | |
| **Start the system** | |
| **Check the fan is running correctly** | |
| Once the system enters run mode **record the Lamp currents** - allow the system to settle for a minimum of 5 minutes before recording these values. | |
| **Calibrate the UV probe** – consult the UV Sensor Calibration section for more details | |
| **Stop the system** | |
| **Activate the Automatic Wiper** - the system should perform a sweep of the quartz as soon as the Wiper control board is activated<br>Calibrate the wiper (If necessary) – consult the **Automatic Quartz Wiping System** section for more details | |

## UV Commission Work Sheet

All readings to be obtained with Fixed Flow Rate and lamp in Full Power

| Supply Voltages | |
|---|---|
| P1 – P2 | |
| P1 – P3 | |
| P2 – P3 | |
| P - N | |

| Lamp Current / Volts / Power | | | | | | | | | | | | | | | |
|---|---|---|---|---|---|---|---|---|---|---|---|---|---|---|---|
| L1 | | | | L2 | | | | L3 | | | | L4 | | | |

| Spectra Readings | | Calibration | | | | Spectra Settings | |
|---|---|---|---|---|---|---|---|
| Dose (mJ/cm²) | | Probe 1 UV % | | m/A | | Final UVT % | |
| Temp ˚C | | Probe 2 UV % | | m/A | | Flow meter Enabled (Y or N) | |
| Flow (m³/hr) | | | | | | Auto Restart Enabled (Y or N) | |
| Nominal lamp current | | | | | | Re Strike Time (mins) | |
| Average lamp current | | | | | | Spectra II SD Card back up | |
| Average UV% | | | | | | | |

| Checks (pass √ or fail X) | | (√ or X) | | (√ or X) | | (Y or N) | |
|---|---|---|---|---|---|---|---|
| Lamp Fault | | Chamber | | Installed Correctly | | Cooling fans operating | |
| Temperature Trip | | MCB's Test | | Auto wiper | | Wiper Calibrated | |
| Chamber Earth Cable | | Quartz Leaks | | Low Dose Alarm | | Lamp Cable Flash Test | |

| Condition of UV system on leaving site | | | | | |
|---|---|---|---|---|---|
| Clean | | Local/Remote | | By-Pass fitted (Y or N) | |
| Alarms | | Full/Variable/Half Power Enabled | | Running (Y or N) | |

## UV Sensor Calibration

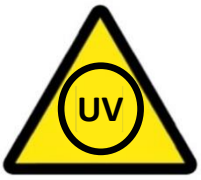


**Warning: Do not expose skin or eyes to ultraviolet light.**

### AT-900 Validated 4-20mA UV Sensor

The validated UV sensors are factory calibrated in reference to a known device.
They are most often used on validated UV systems but can also be used on non-validated UV systems. These sensors are 4-20mA devices and are fitted to the UV sensor housing using a black plastic adaptor.

These sensors must be returned to the factory for calibration every 12 months.
Please contact your supplier for details.

# WAFER® UV System Maintenance & Spares

SAFTEY: Ensure system is electrically isolated and chamber is fully drained before any maintenance work is carried out.

## Maintenance Schedule

### Maintenance Log

Whenever maintenance work is carried out on the UV system, particularly with reference to lamp changes and cleaning / replacing the quartz, a record should be kept of the work carried out and the lamp run hours noted. This log should be used to monitor general lamp life and to develop accurate frequencies for cleaning and replacing the quartz components.
A maintenance log sheet can be found in the Unit Data-book.

### Performance Monitoring

Taking samples from the sample points on the inlet and outlet legs of the UV chamber can be used to monitor the performance of the system. Care should be taken when sampling not to contaminate the sample itself. Poor performance test results can often be traced back to poor sampling techniques.

### UV Lamp

Lamp life expectancy is based on continuous use before the output drops to the low UV output threshold level, making replacement necessary. Frequent stop / start operation will reduce lamp life. Please refer to the system Data-book for typical life expectancy of Lamps.

### Quartz Cleaning and Replacement

The quartz sleeve should be removed and cleaned at a regular intervals. Please refer to the system Data-book for typical life expectancy of Quartz. The wiper (if fitted) cleaning frequency should be increased if there are excessive deposits on the quartz sleeve or decreased if the sleeve remains very clean.
A change in water quality may necessitate a change in the wiper (if fitted) cleaning frequencies. The quartz sleeve should be removed and cleaned in a soap and water solution. Heavier or stubborn deposits can be removed by soaking in a 5% solution of citric acid or wiping with household vinegar. To remove fingerprints from the quartz sleeve, use surgical spirit and a lint free cloth. Please refer to the system Data-book for typical life expectancy of Quartz.

### Seals

It is good practice to replace the seals whenever the quartz sleeve is removed from the chamber.

### Control panel

Commissioning often takes place in a dusty environment. The inlet filter mat should be cleaned shortly after commissioning and at regular intervals depending on the cleanliness of the air.

## Twistlok System Maintenance

### UV Lamp Maintenance

Please refer to the Health & Safety Section at beginning of the manual for Symbol explanations. These are to be adhered to when carrying out the following maintenance procedures.



| UV Lamp Extraction | |
|---|---|
| **1** | Unscrew the clamp ring retaining nut locking the Moulded Twistlok Lamp Connector in place and remove |
| **2** | Carefully disconnect the lamp connector from the lamp and remove |
| **3** | Twist the lamp until unlocked and carefully extract from the quartz keeping the lamp parallel to the quartz sleeve at all times to avoid damage |

| UV Lamp Installation | |
|---|---|
| Before inserting a new lamp, ensure all components are clean and dry. Check that all components are mechanically sound and assembled correctly.<br>**Note:** Please ensure that no dirt, debris or fingerprints get onto the lamp surface as this will reduce the lamp life | |
| **1** | Carefully insert the lamp into the quartz sleeve, keeping it parallel with the quartz to avoid damage |
| **2** | Twist lamp to lock in place, taking care to ensure the return rods are not pointing towards the UV sensor |
| **3** | Carefully connect the lamp connector ensuring that the locking pin is located correctly |
| **4** | Fasten the clamp ring retaining nut to lock the moulded Twistlok lamp connector in place |
| **5** | Ensure the Lamp hours have been reset via the control panel (see **Control Operation** section for more details) |

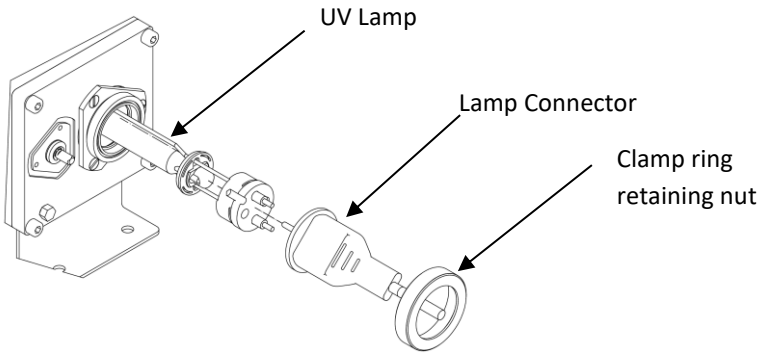


The installation of the updated Wafer™ System lamps is orientation sensitive. The points of the triangular lamp cap must line up with the gaps between the internal tabs on the clamp ring, and the lamp should be left with the return rod facing down. See image below for details:



## Quartz Sleeve Maintenance

Please refer to the Health & Safety Section at beginning of the manual for Symbol explanations. These are to be adhered to when carrying out the following maintenance procedures.

| | |
|---|---|
|  |  |

| Quartz Sleeve Extraction | |
|---|---|
| **1** | Follow the **UV Lamp Extraction** procedure detailed in the previous subsection |
| **2** | Remove the clamp ring screws keeping one hand pushing on to the clamp ring (screwed). Carefully remove the clamp ring (screwed) and PTFE backing ring. If the clamp ring seems tightly in place this will be the secondary seal doing its job and this is normal. Gentle twisting of the Twistlok clamp ring should ease extraction. |
| **3** | Remove the primary 'O' ring seal |
| Repeat steps 2 & 3 on the other side of the chamber with the clamp ring – rear.<br>Notes: There is no PTFE backing ring with the clamp ring - rear | |
| **5** | Carefully remove the quartz sleeve keeping it parallel to avoid damage |

| Quartz Sleeve Installation | |
|---|---|
| **1** | Carefully slide the new/cleaned quartz sleeve into the hole in the end flange keeping it parallel so it locates in the cup at the opposite end of the chamber.<br>If an automatic wiping system is installed, ensure the sleeve is gently guided through the wiper ring (this is can be aided by applying a little water onto the end of the quartz) |
| **2** | Place the primary 'O' ring seal over the quartz sleeve on the rear side of the chamber and locate into the 'O' ring groove. Replace the secondary seal around the clamp ring - rear |
| **3** | Place clamp ring - rear onto the end of the sleeve.<br>Apply some pressure on the clamp ring to force it toward the flange. Fasten with the screws finger tight initially. Tighten the screws in a radial pattern. **Do not over tighten.**<br>**Ensure the seal does not leak.** |
| Repeat steps 2 & 3 on the other side of the chamber with the Twistlok clamp ring | |
| **4** | Follow the **UV Lamp Installation** procedure detailed in the previous subsection |

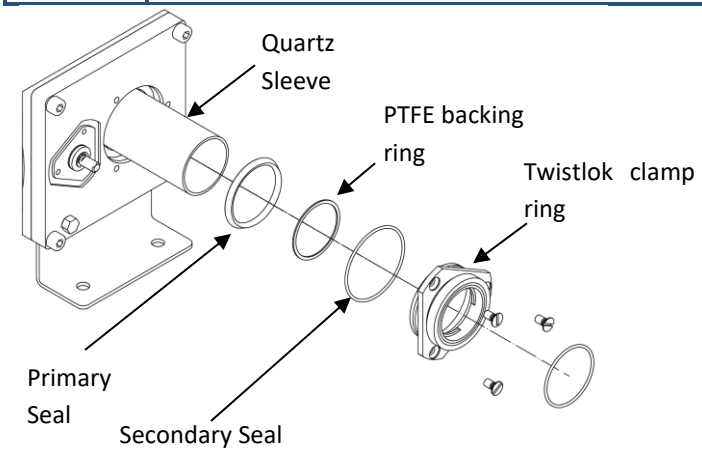


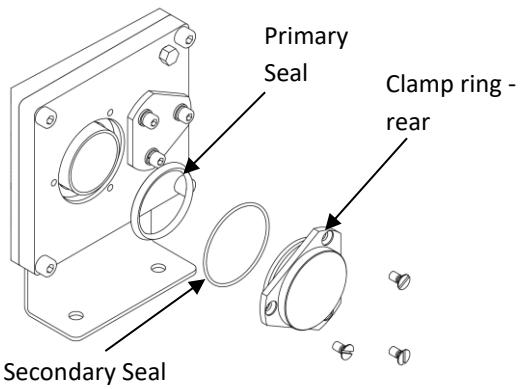

## UV Sensor Maintenance

### UV Sensor Window Housing Maintenance

Please refer to the Health & Safety Section at beginning of the manual for Symbol explanations. These are to be adhered to when carrying out the following maintenance procedures.

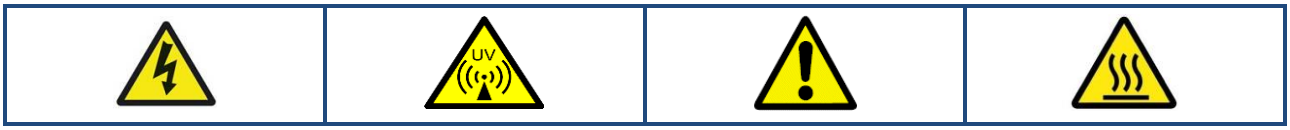


| UV Sensor Housing Removal | | |
|---|---|---|
| | AT-463 UV Probe Installed | AT-900 UV Probe Installed |
| 1 | Unscrew UV probe cable connector | |
| 2 | Unscrew UV probe and remove. | Unscrew UV probe adapter and remove the probe. Unscrew the UV Probe Housing from the window housing. |
| 3 | Unscrew the three screws and remove the window housing. | |
| 4 | Remove the upper window seal and carefully extract the window. If the window does not easily come out gently twist the window to break the lower seal. Remove the lower O' ring seal. | |

| UV Sensor Housing Installation | |
|---|---|
| AT-900 UV Probe Installed | |
| Before inserting a new/cleaned validated sensor quartz window, ensure all components are clean and dry. Ensure that no dirt or debris gets onto the UV sensor or quartz window as this may affect readings. | |
| 1 | Insert the lower 'O' ring seal. Carefully insert the new quartz window. Insert the upper 'O' ring seal. |
| 2 | Replace the window housing, ensuring that the seal is correctly positioned. Install the screws only finger tight initially.<br>Tighten the screws in a radial pattern, each one a quarter turn at a time until tight. |
| 3 | Screw the UV Probe Housing onto the window housing.<br>Insert the UV probe and screw the UV adapter to secure the UV probe |
| 4 | Connect the UV probe lead and screw down to fasten. |

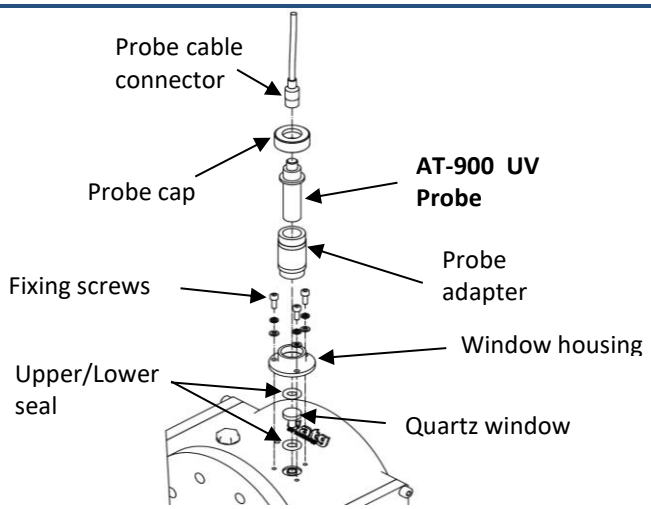

## UV Sensor Maintenance

### AT 900 Validated Sensor Housing Maintenance

Please refer to the Health & Safety Section at beginning of the manual for Symbol explanations. These are to be adhered to when carrying out the following maintenance procedures.

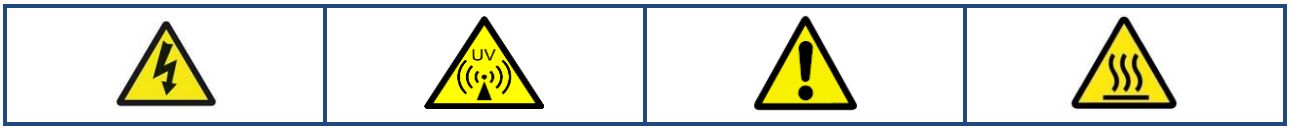


| UV Sensor Housing Removal | |
|---|---|
| 1 | Unscrew UV probe cable connector |
| 2 | Unscrew the UV probe cap and remove the UV probe from the housing |
| 3 | Unscrew the 3 fixing screws |
| 4 | Remove the UV Probe Housing |

| UV Sensor Housing Installation | |
|---|---|
| Before inserting a new/cleaned validated sensor housing, ensure all components are clean and dry. Ensure that no dirt or debris gets into the UV Sensor quartz thimble or probe housing as this may affect readings. | |
| 1 | Insert the UV Probe housing, ensuring that the fixing screw holes are inline. |
| 2 | Install fixing screws |
| 3 | Insert the UV Probe back into the housing, and replace the cap |
| 4 | Screw the UV probe cable connector to the UV probe |

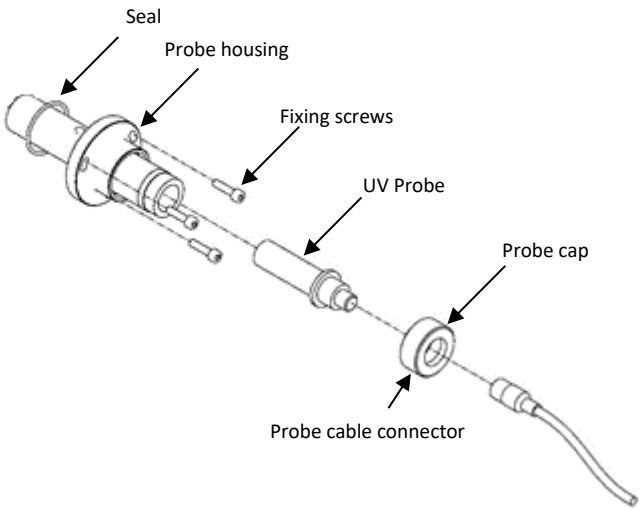

## Automatic Wiper System Maintenance

### Wiper Cover and Motor Maintenance

Please refer to the Health & Safety Section at beginning of the manual for Symbol explanations. These are to be adhered to when carrying out the following maintenance procedures.

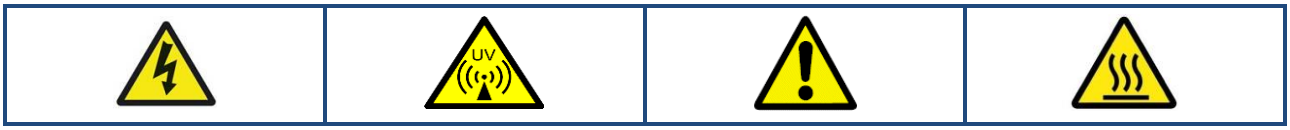


| Wiper Cover & Motor Removal | |
|---|---|
| 1 | Unscrew the wiper cover screws and remove Wiper cover lid |
| 2 | Disconnect the electrical connections on the motor, taking note of the cable positions. |
| 3 | Unscrew the wiper cover fixing screws and remove wiper motor & cover assembly |

| Wiper Motor & Cover Installation | |
|---|---|
| 1 | Screw the wiper motor & cover in place lining the fixing holes with the holes on the wiper cover. Screw in place using the wiper cover fixing screws<br>Ensure the Sensor Cam coupling is located and mated with the rubber coupling. |
| 2 | Re-connect all electrical connections |
| 3 | Screw back in place the wiper motor cover lid with the wiper cover screws |

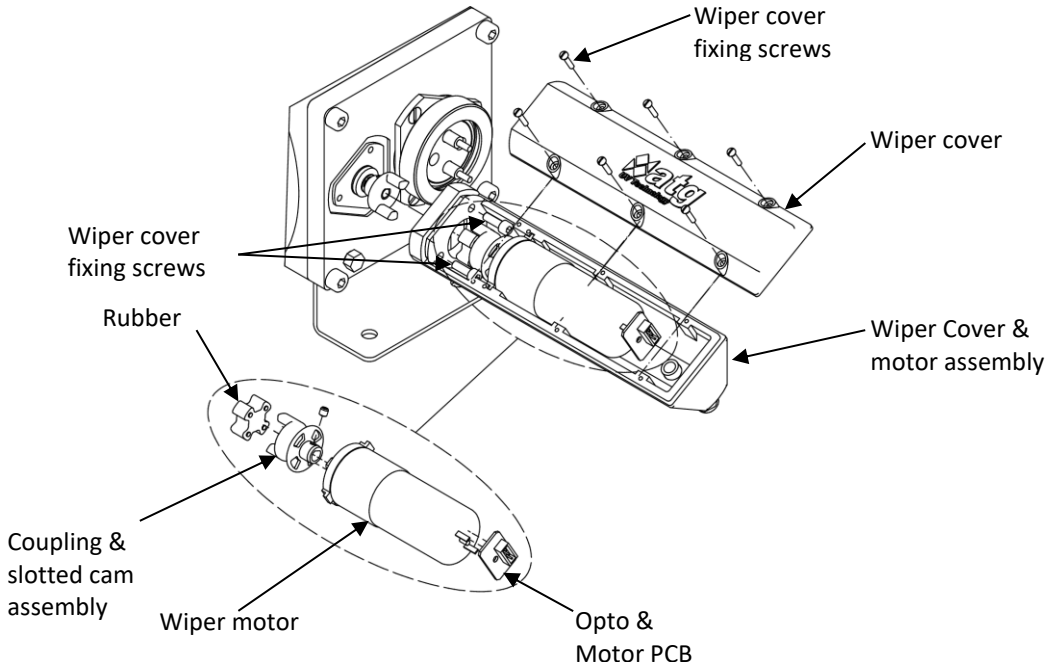

## Wiper Blade Maintenance

Please refer to the Health & Safety Section at beginning of the manual for Symbol explanations. These are to be adhered to when carrying out the following maintenance procedures.

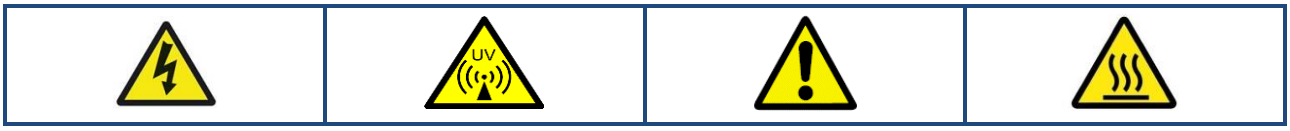


| Wiper Blade Removal | |
|---|---|
| 1 | Remove the motor assembly (refer to **Wiper Cover & Motor Removal** procedures). |
| 2 | Remove the UV Lamps and Quartz sleeve (refer to **UV Lamp Extraction, & Quartz Extraction procedures.)** |
| 3 | Unscrew the flange retaining bolts. This will allow the flange, the wiper carriage & the ACME shaft to be removed. |

| Wiper Blade Installation | |
|---|---|
| 1 | Replace the old wiper blades with the new blades and fit them accordingly. |
| 2 | Slide the drive side flange, the wiper carriage & the AMCE shafts back into the chamber & fix back in place with the flange retaining bolts (check the 'O' seal to see if needs to be replaced). |
| 3 | The Quartz Sleeve and UV Lamp should be replaced (refer to **UV Lamp installation, & Quartz Installation** procedures). |
| 4 | Re-fit the wiper motor assembly (refer to **Wiper Motor & Cover Installation** procedures). |
| 5 | If the carriage has not been moved then there should be no need to recalibrate the wiper. If the carriage has been moved, recalibration of the wiper is imperative (refer to **Automatic Wiper** section of the manual). |

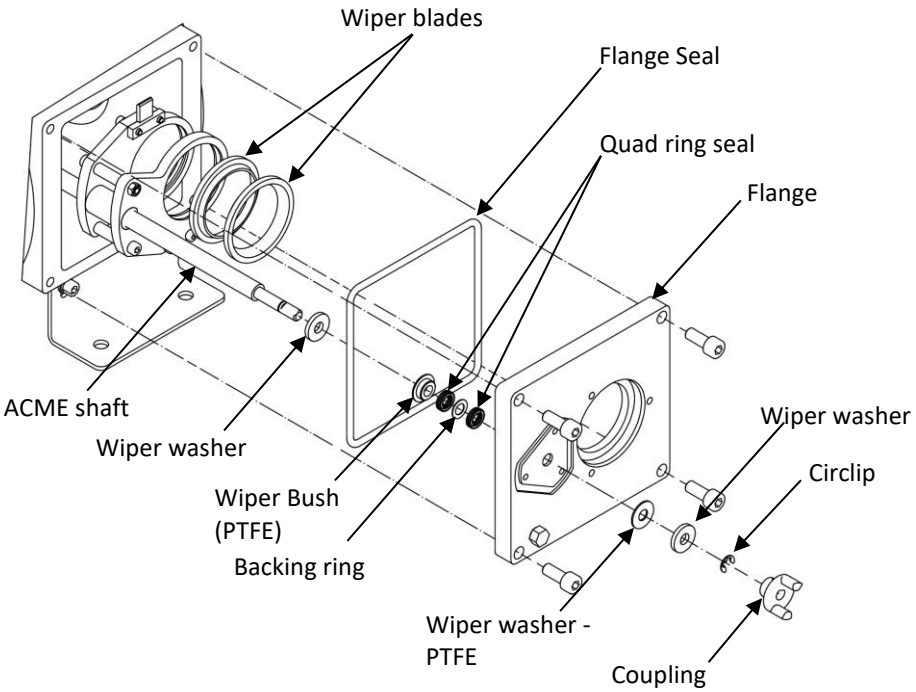

### Wiper Body Maintenance (1 Lamp System)

Please refer to the Health & Safety Section at beginning of the manual for Symbol explanations. These are to be adhered to when carrying out the following maintenance procedures.

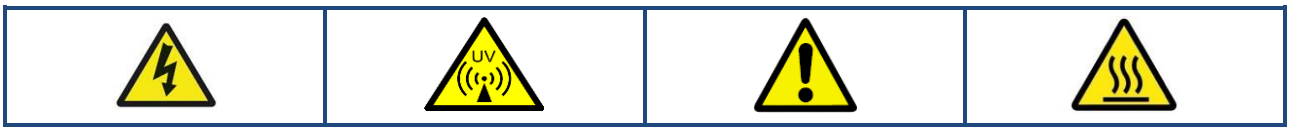


| Wiper Carriage Removal | |
|---|---|
| 1 | Remove the Motor assembly (refer to **Wiper Cover & Motor Removal & Wiper Bearing & Seal Removal** procedures) |
| 2 | Remove the UV Lamps & Quartz Sleeve (refer to **UV Lamp Extraction & Quartz Sleeve Extraction** procedures). |
| 3 | Unscrew the flange retaining bolts. This will allow the flange, the wiper carriage & the ACME shaft to be removed. |
| 4 | Remove the Wiper carriage from the Wiper shaft. |
| 5 | Unscrew the Wiper body screws to release the Lead screw nut and Wiper carriages |

| Wiper Body Installation | |
|---|---|
| 1 | Replace Lead Screw Nut (if required). |
| 2 | Line up the Wiper Carriage and Lead Screw Nut Fixing Ring with the Leads screw nut and screw together with the wiper body screws. |
| 3 | Screw the Wiper Assembly back onto the Wiper Shaft. |
| 4 | Re-calibration of the wiper is required after Wiper body removal (refer to **Automatic Wiper** section). |

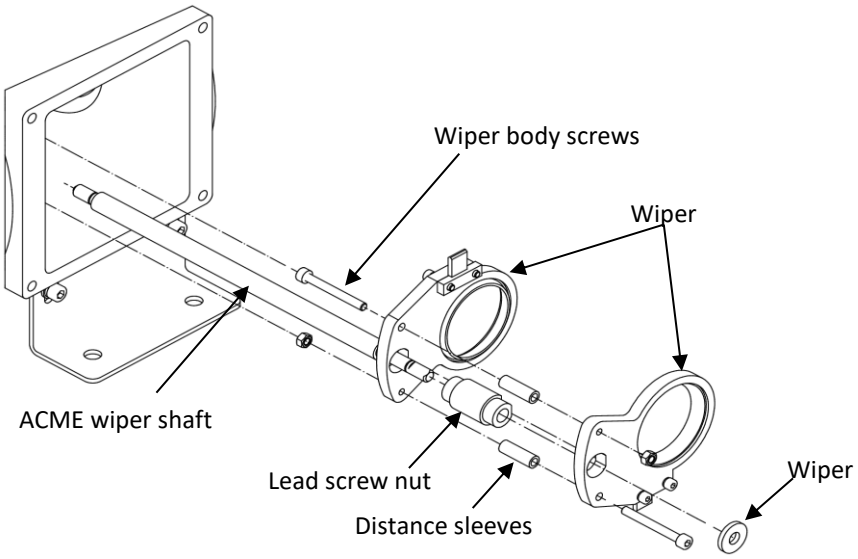

### Wiper Body Maintenance (2-4 Lamp System)

Please refer to the Health & Safety Section at beginning of the manual for Symbol explanations. These are to be adhered to when carrying out the following maintenance procedures.

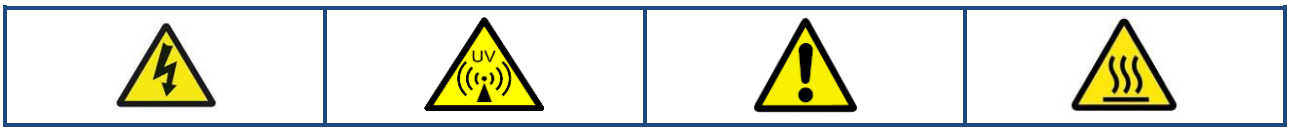


| Wiper Carriage Removal | |
|---|---|
| 1 | Remove the Motor assembly (refer to **Wiper Cover & Motor Removal & Wiper Bearing & Seal Removal** procedures) |
| 2 | Remove the UV Lamps & Quartz Sleeve (refer to **UV Lamp Extraction & Quartz Sleeve Extraction** procedures). |
| 3 | Unscrew the flange retaining bolts. This will allow the flange, the wiper carriage & the ACME shaft to be removed. |
| 4 | Remove the Wiper carriage from the Wiper shaft. |
| 5 | Unscrew the wiper carriage from one side of the wiper body lid. Remove one side of the wiper body lid by removing the wiper body screws. |

| Wiper Body Installation | |
|---|---|
| 1 | Replace Lead Screw Nut (if required) and insert inside the Wiper Body. |
| 2 | Screw is place both Wiper Body Lid's on either side of the Wiper Body ensureing the O'Ring Seal and flanged bush are between. |
| 3 | Screw in the place Wiper Carriage onto one side of the Wiper Lid. |
| 4 | Screw the Wiper Assembly back onto the Wiper Shaft, ensuring to clip the circlips back in place on the ends of the shaft. |
| 4 | Re-calibration of the wiper is required after Wiper body removal (refer to **Automatic Wiper** section). |

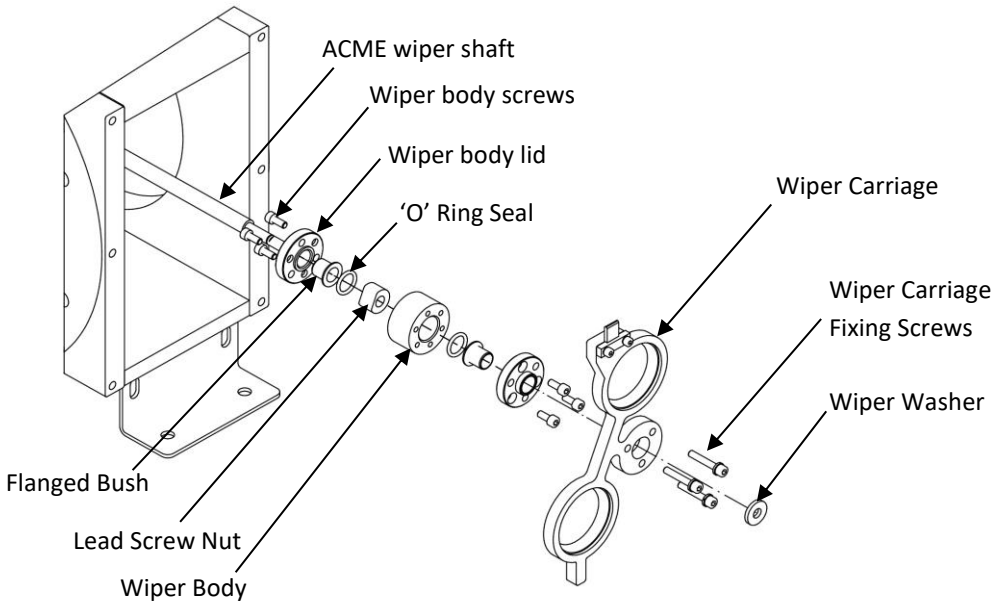

## Spare Parts

### General Assembly

**Note**: Typical of a WF-115-3

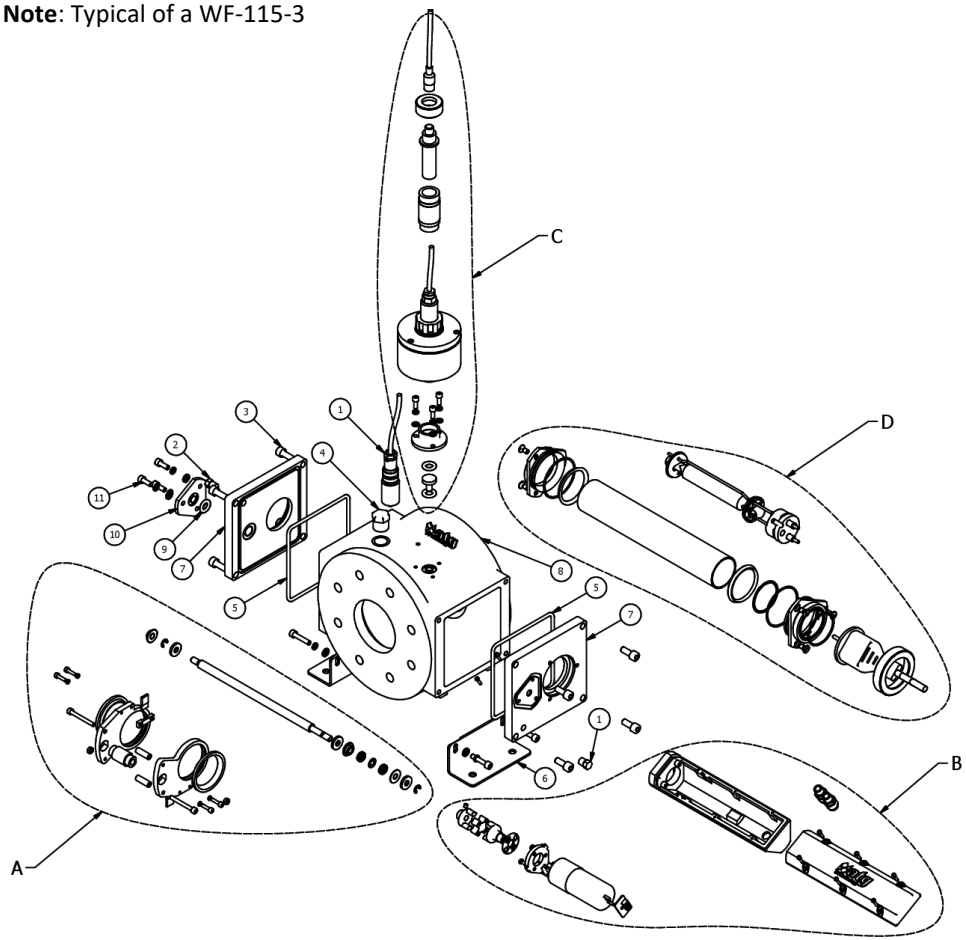


| ITEM | PART NO. | DESCRIPTION |
|---|---|---|
| A | Automatic Wiper Carriage Assembly | |
| B | Automatic/Manual Wiper Drive Assembly | |
| C | UV Sensor Assembly | |
| D | Lamp & Quartz Assembly | |
| Note: some sizes of parts in this assembly may vary according to chamber size | | |
| 1 | W2T873075 | AT-487 PT100 Temperature Probe |
| 2 | - | Hex Head Plug |
| 3 | - | Flange Retaining bolts |
| 4 | - | NPT Stopping Plug |
| 5 | Refer to Maintenance Spares List | EPDM 'O' Ring |
| 6 | - | Chamber Feet |
| 7 | - | Chamber Flange |
| 8 | - | Chamber Body |
| 9 | Refer to Maintenance Spares List | EPDM 'O' Ring Window Seal |
| 10 | W2T873805 | Wiper Blanking Plate |
| 11 | - | M6 x 16 Sckt Head |

## Lamp & Quartz Assembly

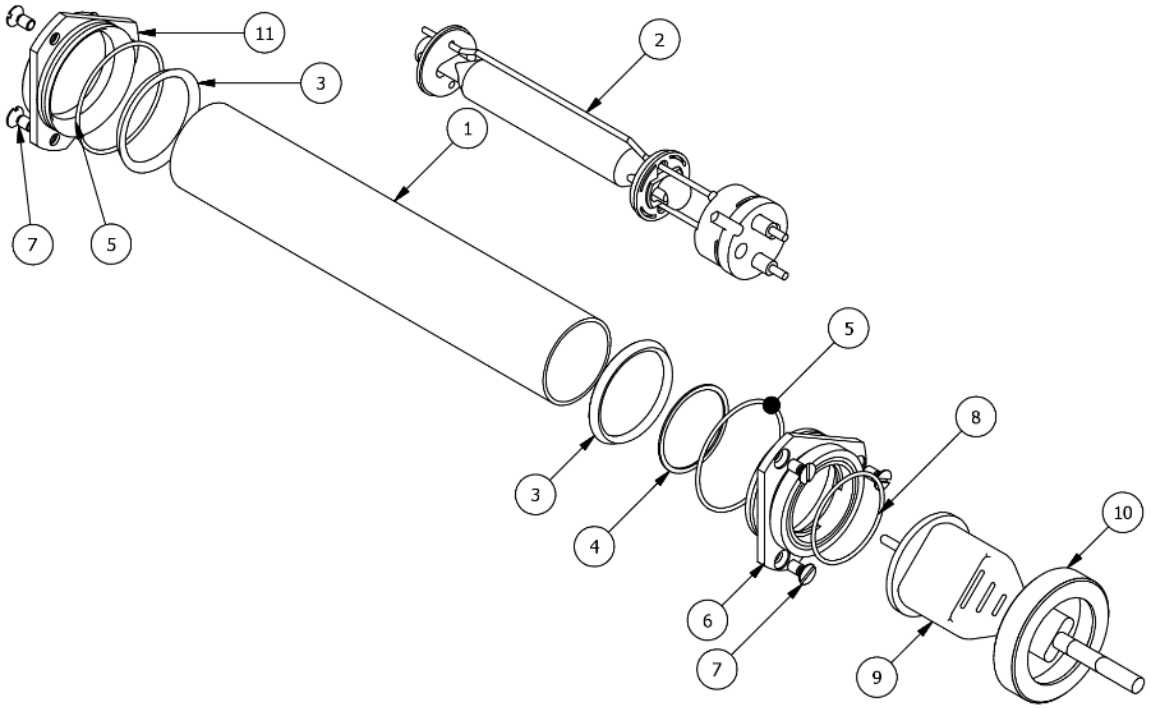


| ITEM | PART NO. | DESCRIPTION |
|---|---|---|
| 1 | Refer to Maintenance Spares List | Quartz Sleeve |
| 2 | Refer to Maintenance Spares List | UV Lamp |
| 3 | Refer to Maintenance Spares List | EPDM 'O' Ring (Primary) |
| 4 | Refer to Maintenance Spares List | PTFE Clamp Ring Gasket |
| 5 | Refer to Maintenance Spares List | EPDM 'O' Ring (Secondary) |
| 6 | W2T873826 | Clamp Ring - Screwed - Q49 - 5mm Seal |
| 7 | - | M6 x 12 Slotted CSunk flat head screw |
| 8 | W2T874291 | EPDM 'O' Ring |
| 9 | - | Moulded Twistlok Lamp Connector |
| 10 | W2T873828 | Clamp Ring - Screwed  Retainer - Q49 |
| 11 | W2T873827 | Clamp Ring - Rear - Q49 |

## UV Window Assembly

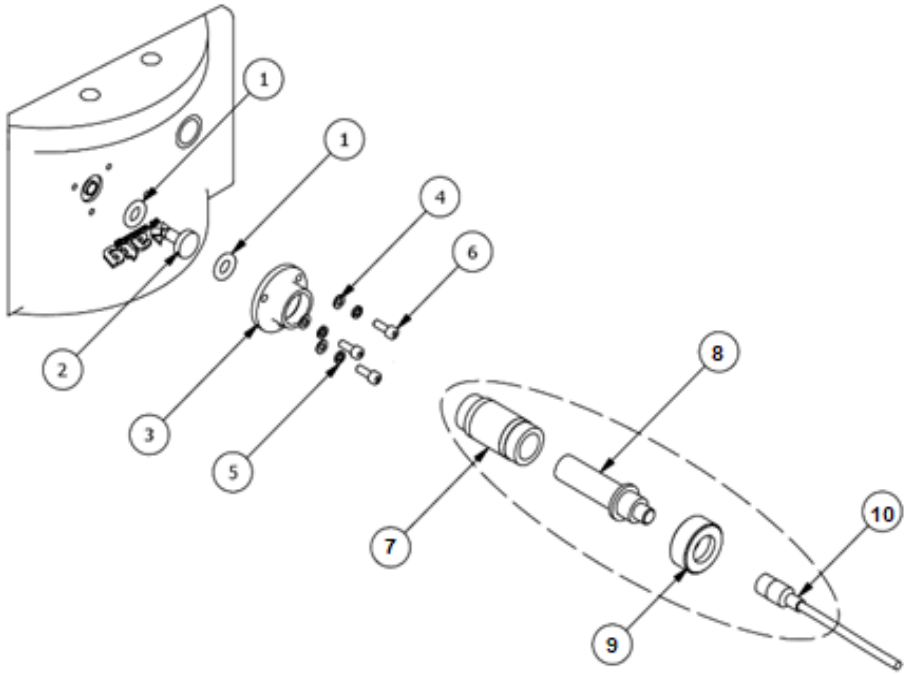


| ITEM | PART NO. | DESCRIPTION |
|---|---|---|
| 1 | Refer to Maintenance Spares List | EPDM 'O' Ring |
| 2 | Refer to Maintenance Spares List | Quartz Window (Top Hat) |
| 3 | W2T873968 | UV Probe Housing - Loose Section |
| 4 | - | M5 Washer |
| 5 | - | M5 Spring washer |
| 6 | - | M5 x 14 Sckt head |
| **AT 900 Validated UV Probe** | | |
| 7 | W2T873971 | Probe Adaptor Base |
| 8 | Refer to Data-book | AT 900 Validated UV Probe (ONORM) |
| 9 | W2T873972 | Probe Adaptor Cap |
| 10 | - | Probe Connector & cable |

UV Sleeve Assembly (For WF-230-10 & WF-430-12 ONLY)

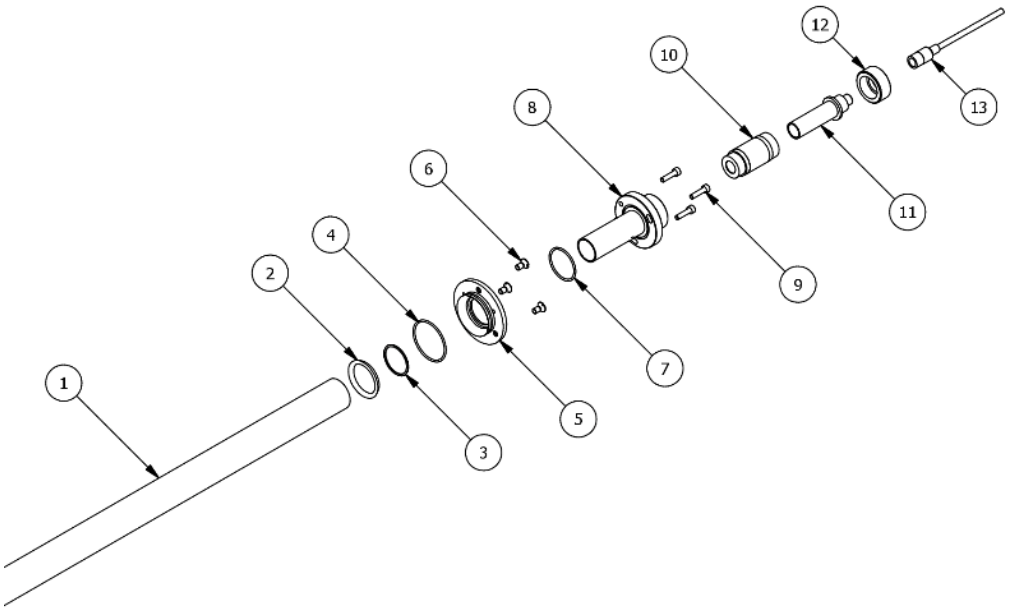


| ITEM | PART NO. | DESCRIPTION |
|---|---|---|
| 1 | Refer to Maintenance Spares List* | UV Quartz Thimble |
| 2 | Refer to Maintenance Spares List | EPDM 'O' Ring (Primary) |
| 3 | Refer to Maintenance Spares List | PTFE Clamp Ring Gasket |
| 4 | Refer to Maintenance Spares List | EPDM 'O' Ring (Secondary) |
| 5 | W2T873600 | QTH-36 Clamp Ring for UV Sensor |
| 6 | - | M6 x 12 Slotted CSunk flat head screw |
| 7 | W2T874269 | EPDM 'O' Ring |
| 8 | W3T469393 | UV Validated Probe Housing |
| 9 | - | M5 x 20 Sckt Head Bolt |
| 10 | W2T873971 | UV Validated Probe Adaptor (Base) |
| 11 | Refer to Data-book | Validated UV Probe (ONORM) |
| 12 | W2T873972 | Validated UV Probe Adaptor Cap |
| 13 | - | UV Probe Connector and Cable |

## Automatic Wiper Drive Assembly

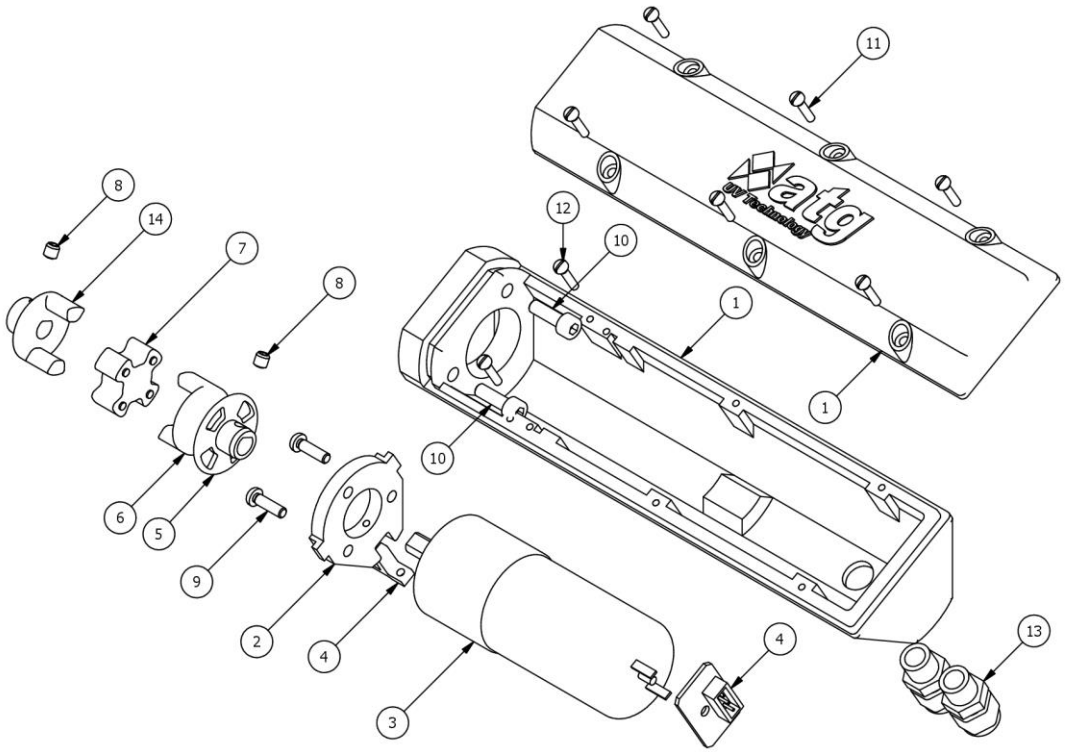


| ITEM | PART NO. | DESCRIPTION |
|---|---|---|
| 1 | W2T873784 & W2T873785 | Wiper Motor Body & Lid |
| 2 | W2T873783 | Motor Housing Mount |
| 3 | W2T874493 | Wiper Motor |
| 4 | W2T873069 | ATUV-1150 - Opto Pulse Counter |
| 5 | W2T873767 | 12mm Shaft - Sensor Cam |
| 6 | W2T873766 | 12mm Shaft - Coupling Motor |
| 7 | W2T873730 | Wiper Motor Rubber Coupling |
| 8 | - | M5 x 5 Grub screw |
| 9 | - | M4 x 12 Pan head screws |
| 10 | - | M5 x 25 Sckt Head Screw |
| 11 | - | M3.5 x 13 self-tapping screws |
| 12 | - | M3.5 x 9.5 self-tapping screws |
| 13 | - | M12 Gland |
| 14 | W2T873765 | 12mm Shaft - Coupling Shaft |

## Single-Lamp Automatic Wiper Carriage Assembly

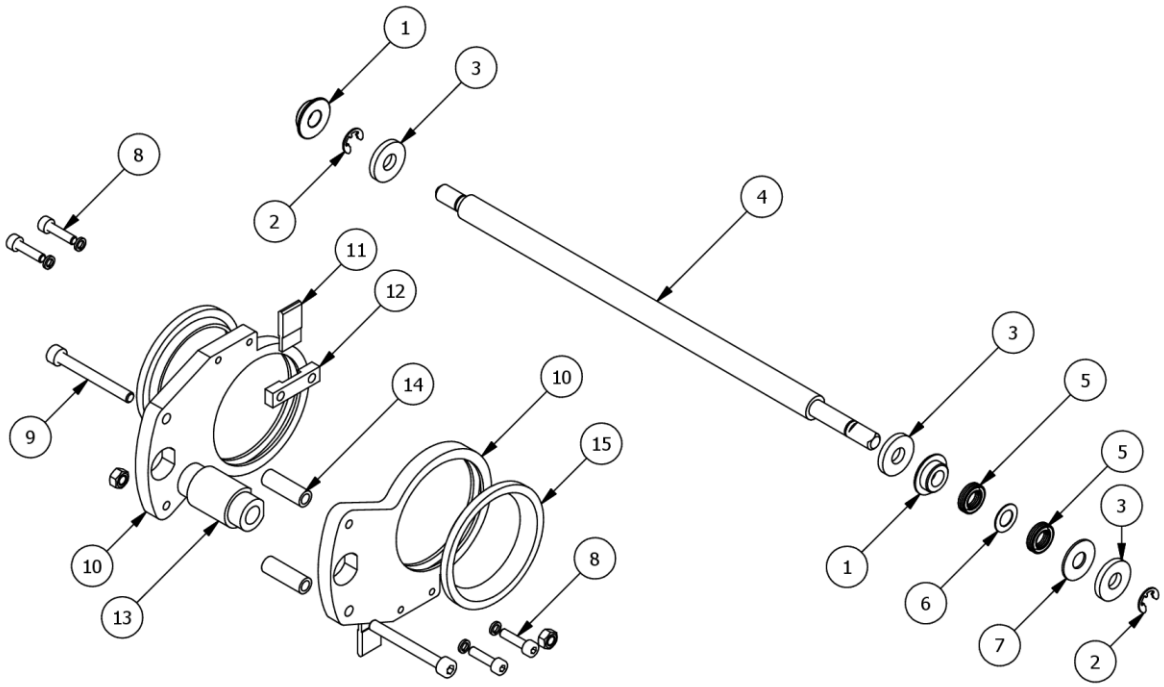


| ITEM | PART NO. | DESCRIPTION |
|---|---|---|
| 1 | Refer to Maintenance Spares List | Wiper Bush (PTFE) - WF |
| 2 | W2T873769 | 12mm Shaft - Wiper External Eclip |
| 3 | W2T873758 | 12mm Shaft - Wiper Washer |
| 4 | - | ACME Wiper Shaft |
| 5 | Refer to Maintenance Spares List | Nitrile Quad Ring |
| 6 | Refer to Maintenance Spares List | PTFE Backing Ring |
| 7 | Refer to Maintenance Spares List | PTFE - Wiper Washer |
| 8 | - | M4 x 16 Sckt Head |
| 9 | - | M5 x 45 Sckt Head |
| 10 | - | Wiper Carriage |
| 11 | Refer to Maintenance Spares List | Window Wiper Flap |
| 12 | W2T873559 | Window Wiper Flap Fixing Bracket |
| 13 | Refer to Maintenance Spares List | Lead Screw Nut |
| 14 | W2T873676 | Wiper Carriage Plate Distance Sleeve |
| 15 | Refer to Maintenance Spares List | 49-Dia Wiper Rings |

## Multi-Lamp Automatic Wiper Carriage Assembly

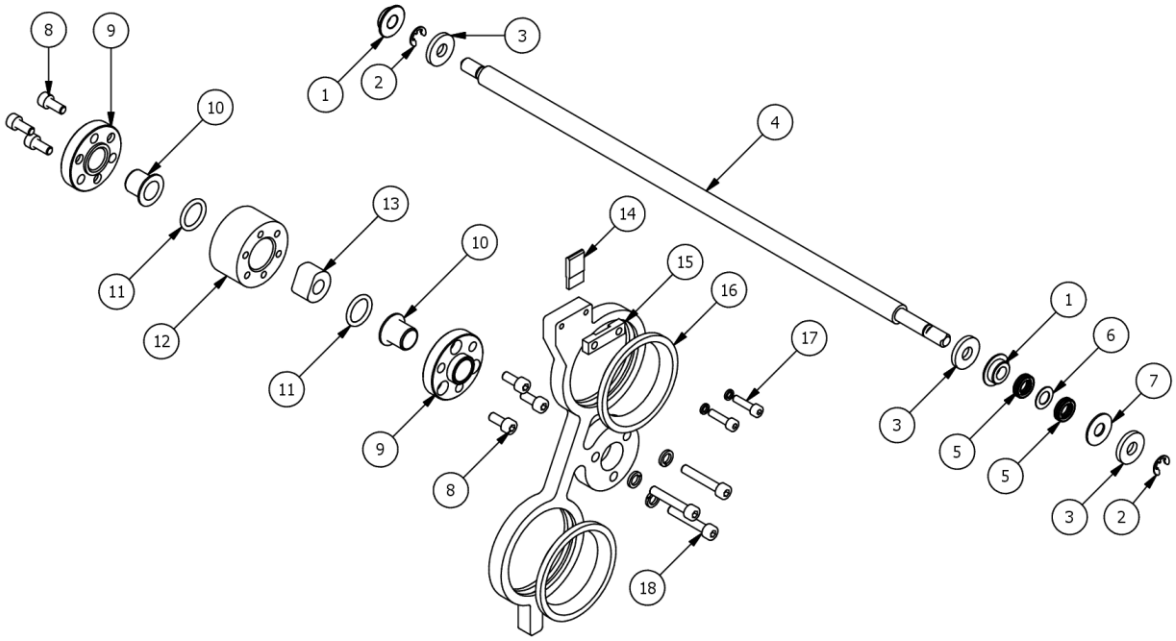


| ITEM | PART NO. | DESCRIPTION |
|---|---|---|
| 1 | Refer to Maintenance Spares List | Wiper Bush (PTFE) - WF |
| 2 | - | 15mm Circlips |
| 3 | W2T873758 | 12mm Shaft - Wiper Washer |
| 4 | - | ACME Wiper Shaft |
| 5 | Refer to Maintenance Spares List | Nitrile Quad Ring |
| 6 | Refer to Maintenance Spares List | PTFE Backing Ring |
| 7 | Refer to Maintenance Spares List | PTFE - Wiper Washer |
| 8 | - | M5 x 10 Sckt Head Bolt |
| 9 | W2T873756 | 12mm Shaft - Wiper Body Lid |
| 10 | W2T873708 | 12mm - Flanged Bush |
| 11 | W2T874255 | EPDM 'O' Ring |
| 12 | W2T873755 | 12mm Shaft - Wiper Body |
| 13 | Refer to Maintenance Spares List | Lead Screw Nut |
| 14 | Refer to Maintenance Spares List | Window Wiper Flap |
| 15 | W2T873559 | Window Wiper Flap Fixing Bracket |
| 16 | Refer to Maintenance Spares List | 49-Dia Wiper Rings |
| 17 | - | M4 x 16 Sckt Head |
| 18 | - | M5 x 40 Sckt Head Bolt |

## Maintenance Spares List

| ITEM | PART NO. | DESCRIPTION | WF-115-3 | WF-115-4 | WF-125-6 | WF-215-6 | WF-215-8 | WF-225-8 | WF-230-10 | WF-430-12 |
|---|---|---|---|---|---|---|---|---|---|---|
| **General Assembly** | | | | | | | | | | |
| 5 | W2T874371 | EPDM 'O' Ring 150 x 4 | 2 | 2 | | | | | | |
| 5 | W2T874372 | EPDM 'O' Ring 228 x 4.5 | | | 2 | 2 | 2 | 2 | | |
| 5 | W2T874373 | EPDM 'O' Ring 273 x 4 | | | | | | | 2 | |
| 5 | W2T874272 | EPDM 'O' Ring 302 x 4 | | | | | | | | 2 |
| 9 | W2T874326 | EPDM 'O' Ring 13 x 3.5 Window Seal (QWS-20) | 1 | 1 | 1 | 1 | 1 | 1 | 1 | 1 |
| **Lamp & Quartz Assembly** | | | | | | | | | | |
| 1 | W2T874113* | Quartz Sleeve (QSL 49X270) | 1 | 1 | | | | | | |
| 1 | W2T874114* | Quartz Sleeve (QSL 49X385) | | | 1 | 2 | 2 | 2 | | |
| 1 | W2T874149* | Quartz Sleeve QSL-49 x 525 | | | | | | | 2 | 4 |
| 2 | W2T873500 | 1.5kW MP Ballast Lamp | 1 | 1 | | | | | | |
| 2 | W2T873501 | 1.5kW MP Ballast Lamp | | | | 2 | 2 | | | |
| 2 | W2T875335 | 2.5kW MP Ballast Lamp | | | 1 | | | 2 | | |
| 2 | W2T873502 | 3.0kW MP Ballast Lamp | | | | | | | 2 | 4 |
| 3 | W2T874279 | EPDM 'O' Ring 49 x 5.0 v70 | 2 | 2 | 2 | 4 | 4 | 4 | 4 | 4 |
| 4 | W2T874359 | PTFE Clamp Ring Gasket (49.5 x 44.5 x 1) | 1 | 1 | 1 | 2 | 2 | 2 | 2 | 2 |
| 5 | W2T874283 | EPDM 'O' Ring 59 x 2.0 | 2 | 2 | 2 | 4 | 4 | 4 | 4 | 4 |
| **UV Window Assembly** | | | | | | | | | | |
| 1 | W2T874326 | EPDM 'O' Ring 13 x 3.5 Window Seal (QWS-20) | 2 | 2 | 2 | 2 | 2 | 2 | 2 | 2 |
| 2 | W2T874235 | VERIFIED Quartz Window QWI-20 x 15 x 5 | 1 | 1 | 1 | 1 | 1 | 1 | 1 | 1 |
| **UV Sleeve Assembly** | | | | | | | | | | |
| 1 | W3T480279 | Quartz Sleeve QSL-36 x 524 | | | | | | | 2 | 4 |
| 2 | W2T874270 | EPDM 'O' Ring 36 x 5.0 V70 | | | | | | | 1 | 2 |
| 3 | W2T874358 | PTFE Clamp Ring Gasket | | | | | | | 1 | 2 |
| 4 | W2T874278 | EPDM 'O' Ring 46 x 2.0 V70 | | | | | | | 1 | 2 |
| **Single lamp Automatic Wiper Carriage Assembly** | | | | | | | | | | |
| 1 | W2T873809 | Wiper Bush (PTFE) - WF | 2 | 2 | 2 | | | | | |
| 5 | W2T874361 | Nitrile Quad Ring 7.52 x 3.53 | 2 | 2 | 2 | | | | | |
| 6 | W2T874362 | PTFE Backing Ring 13.9OD x 8.1ID x 0.5Thk | 1 | 1 | 1 | | | | | |
| 7 | W2T874374 | PTFE - Wiper Washer | 1 | 1 | 1 | | | | | |
| 11 | W2T873557 | 14x3 Window Wiper Flap | 2 | 2 | 2 | | | | | |
| 13 | W2T873674 | SP Wiper Carriage Lead Screw Nut | 1 | 1 | 1 | | | | | |
| 15 | W2T874343 | 49-Dia Wiper Rings in 80 Shore EPDM | 1 | 1 | 1 | | | | | |

| ITEM | PART NO. | DESCRIPTION | WF-115-3 | WF-115-4 | WF-125-6 | WF-215-6 | WF-215-8 | WF-225-8 | WF-230-10 | WF-430-12 |
|---|---|---|---|---|---|---|---|---|---|---|
| **Multi-Lamp Automatic Wiper Carriage Assembly** | | | | | | | | | | |
| 1 | W2T873809 | Wiper Bush (PTFE) - WF | | | | 2 | 2 | 2 | 2 | 2 |
| 5 | W2T874361 | Nitrile Quad Ring 7.52 x 3.53 | | | | 2 | 2 | 2 | 2 | 2 |
| 6 | W2T874362 | PTFE Backing Ring 13.9OD x 8.1ID x 0.5Thk | | | | 1 | 1 | 1 | 1 | 1 |
| 7 | W2T874374 | PTFE - Wiper Washer | | | | 1 | 1 | 1 | 1 | 1 |
| 13 | W2T873757 | 12mm Shaft - Lead Screw Nut | | | | 1 | 1 | 1 | 1 | 1 |
| 14 | W2T873557 | 14x3 Window Wiper Flap | | | | 1 | 1 | 1 | 1 | 1 |
| 16 | W2T874343 | 49-Dia Wiper Rings in 80 Shore EPDM | | | | 2 | 2 | 2 | 2 | 4 |

* Standard part shown. For non-standard options, please refer to the Data-book to confirm

# ATUV-1040 Automatic Quartz Wiping System

**IMPORTANT:** This section of the manual is only applicable to systems that have an Automatic Wiping Mechanism installed on the chamber. If you are unsure whether your system has an Automatic Wiper Mechanism installed, please contact **Evoqua**.

## General Operation

The ATUV-1040 module controls the operation of the automatic wiping mechanism. The system uses an infra-red optical sensor and a slotted disc connected to the wiper motor shaft to detect pulses of infra-red light as the shaft turns. The light pulses are converted to an electrical signal allowing the system to count the number of pulses and determine the length of the chamber and know the wiper's exact position within the chamber.

Upon applying power to the wiper module, a calibration check is performed. If the system is not calibrated, the module waits for the calibration process to be initiated. If the system is calibrated, the wiper will run automatically at a user-defined frequency.
If power is removed during a run, the wiper will resume running immediately when power is restored.

### LED Indicators & Push Buttons




| LED/Push Button | Description |
|---|---|
| **OTPO PULSE (Optical Sensor Detector)** | This LED is in series with the optical sensor's infra-red detector and will pulse on/off when the wiper motor shaft turns.<br>**Note**: When the wiper motor is not running, this LED could be either OFF or ON depending on the position of the slotted disc relative to the optical sensor. |
| **OPTO HTHY (Optical Sensor Emitter)** | This LED is in series with the optical sensor's infra-red emitter and will be permanently lit when the emitter is functioning correctly. |
| **LINK (Emergency Stop)** | This LED will be on when the emergency stop input is active (closed). This LED ***MUST*** be on for the wiper motor to operate (run or calibrate). |
| **STATUS (System Healthy/Fault Status)** | This LED shows the following states:<br>LED Off – System not calibrated.<br>Slow Flash (once/second) – Wiper motor stalled or optical sensor failed.<br>Fast Flash (5 times/second) – Wiper motor current has exceeded the trip current setting.<br>LED Permanently On – System is healthy and calibrated. |
| **CAL (Calibrate)** | Press and hold for more than 0.5 seconds to initiate the calibration process. |
| **RUN (Force Run)** | Pressing this button for between 0.2s and 2s initiates a run. Pressing this button for between 4s and 6s initiates a run to the service position.<br>**Note:** A run cannot be initiated unless the system is calibrated. |

## Connection Diagrams




| Terminal | Description |
|---|---|
| **1** | No Connection |
| **2** | Optical Sensor Common |
| **3** | Optical Sensor Emitter |
| **4** | Optical Sensor Detector |
| **5** | Wiper Motor Positive |
| **6** | Wiper Motor Negative |
| **7** | Emergency Stop Input 1 |
| **8** | Emergency Stop Input 2 |
| **9** | Run/Calibrate Input 1 |
| **10** | Run/Calibrate Input 2 |
| **11** | System Healthy Output (Relay N/O contact) |
| **12** | System Healthy Output (Relay COM contact) |

**Important!** The Motor and Optical Sensor connections are polarity conscious; care should be taken to ensure they are wired correctly at the terminals.

**Note!** The Emergency Stop and Run/Calibrate inputs are volt-free and are activated by connecting their respective inputs (1 & 2) together by a switch or relay.

**Note!** The system output relay is energised (contacts closed) when the system is healthy and calibrated.

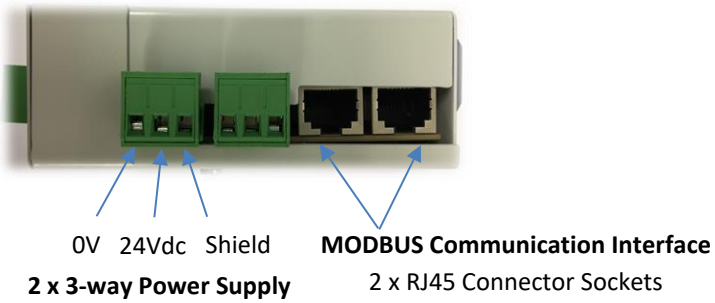

## DIP-Switch Settings

| DIPSW1 – System Setup Dip-Switch | |
|---|---|
| 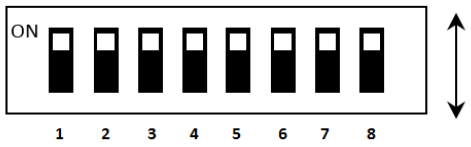 | This switch allows the operator to setup the wiper system to function correctly and with the correct wiping frequency.<br>It also allows the operator to calibrate the wiper system |

| DIP 1 - 3 - Wiping Frequency Setup | | | | | | | | |
|---|---|---|---|---|---|---|---|---|
| **Frequency** | **Never *** | **15 Mins** | **30 Mins** | **1 hour** | **2 Hours** | **6 Hours** | **12 Hours** | **24 Hours** |
| **DIP1** | OFF | OFF | OFF | OFF | ON | ON | ON | ON |
| **DIP2** | OFF | OFF | ON | ON | OFF | OFF | ON | ON |
| **DIP3** | OFF | ON | OFF | ON | OFF | ON | OFF | ON |

***** If the Frequency is set to 'Never' (DIP1-3 = OFF), this allows the frequency of the wiper to be controlled via the Control System's Wiper Run Interval Parameter (Refer to Control Operation section of the Manual).

**Important!** DIP Switches 4 – 8 are for internal use only and should not be altered.

## Calibration

For correct operation, the wiper must first be calibrated. Calibration allows the wiper module to determine the length of the chamber and park the wiper at the home position at one end of chamber. The calibration process is automatic but must be initiated in one of the following ways:

1. Send a Calibrate Command via the **Spectra** Control System Interface (Refer to Control Operation Section of Manual).
2. Pressing the calibrate button on the wiper module.
3. Activate the wiper module's Run/Calibrate digital input for between 4 and 6 seconds.

Once calibration is initiated, the status LED is extinguished and the wiper moves toward the end of the chamber nearest the home position. The optical detector LED will flash. Once the wiper reaches the end, the wiper's direction of travel is reversed and the wiper moves toward the opposite end of the chamber, recording the chamber's length as it travels. Once the opposite end of the chamber is reached, the wiper's direction of travel is reversed once again and the wiper moves back to the home position. On successful calibration, the status LED will be permanently lit and the system healthy relay energised (normally-open contacts will close).

## Run

A run will automatically occur periodically once the wiper module is calibrated. The run frequency is determined by either the Wiper Run Interval parameter on Control Interface (Refer to Control Operation section of Manual), or SW1, SW2 and SW3 (see Section 'DIP Switch Settings').
A run can also be initiated in one of the following ways:

1. Send a Calibrate Command via the Control System Interface (Refer to Control Operation Section of Manual).
2. Pressing the run button on the wiper module
3. Activate the wiper module's Run/Calibrate digital input for between 0.2 and 2 seconds or for more than 8 seconds respectively

**Note!** Any attempt to initiate a run whilst the system is not calibrated or a run is already in progress is ignored.

## Service Position

To facilitate removal of UV lamps during servicing, the wiper can be moved to a position 1/3$^{rd}$ along the chamber length from the home position in one of the following ways:

1. Select ed via the Wiper Service Position setting found in the Operator menu (Refer to Control Operation section of the Manual)
2. Press the RUN button on the wiper module for between 4 and 6 seconds.
3. Send a service command to the wiper module over the MODBUS communication interface (Refer to Control Operation section of the Manual)

## TroubleShooting

**Note:** If a wiper fault is to occur, the Spectra Membrane interface will display 'Wiper Fault'. By pressing enter on this message, the fault can be diagnosed in more detail by pressing Enter.

| Fault Description | Possible Cause | Possible Solution |
|---|---|---|
| Not Calibrated | Wiper has lost its calibrated memory<br>The wiper has been put into service mode (STATUS LED is extinguished) | Follow Calibration Procedures (initiated in 3 possible ways) |
| Motor Current Trip | ATUV-1040 has detected an over current (STATUS LED Fast Flashing - 5 times/second).<br>- Wiper mechanism is jammed.<br>- Calibration has been lost/corrupted | Ensure the internal/external wiper parts are not causing the wiper jam/seize. The wiper shaft should be able to be rotated by hand<br>Re-calibrate the Wiper |
| Loss Of Pulses | ATUV-1040 has detected a Loss of pulses error (STATUS LED Fast Flashing - 1 times/second).<br>- **OPTO PULSE LED** does not flash when motor is turning | Check dust cover is in position. (Direct sunlight or a bright light can blind the opto sensor)<br>Ensure the opto sensor is correctly positioned over the cam<br>Ensure the motor is running when attempting a sweep. |
| Safety Stop | LINK LED on the ATUV-1040 has extinguished<br>- LINK signal has been removed | Ensue the LINK signal is re-established and the LINK LED is illuminated |
| No Motor Current | The ATUV-1040 module is not measuring any current from the motor | Ensure the connections to the motor are properly installed<br>Ensure the motor turns when 24Vdc is applied. |
| No Pulses | **OPTO PULSE LED** does not flash when motor is turning | Check dust cover is in position. (Direct sunlight or a bright light can blind the opto sensor)<br>Ensure the opto sensor is correctly positioned over the cam<br>Ensure the motor is running when attempting a sweep. |
| Minimum Chamber Length | Calibrated length is less than the pre-determined minimum | Ensure the internal/external wiper parts are not causing the wiper jam/seize. The wiper shaft should be able to be rotated by hand |
| Maximum Chamber Length | Calibrated length is greater than the pre-determined minimum | Check that the threads on the wiper carriage Lead Screw Nut have not worn allowing the shaft to rotate freely |
| Run Time Exceeded | Wiper has ran for longer than expected during calibration | Check that the threads on the wiper carriage Lead Screw Nut have not worn allowing the shaft to rotate freely |

## Maintenance Advice

The level and type of contamination within the fluid being treated and the frequency of wiping will define the frequency of maintenance action required, therefore the wiper system should be inspected frequently by a competent person to determine if the primary seal has broken-down.
Consult the Maintenance section of this manual for details on how to carry out maintenance of the Automatic Wiping system.

# Spectra 3 Membrane Operation V2

## Spectra Membrane Control System

Spectra is an automated control system developed by **Evoqua** to control and monitor the operation of its UV Disinfection systems.

### Components

The Spectra Control system consists of the following components:

- Spectra Membrane (ATUV-1010)
- ATUV-1220 (I/O Module)
- ATUV-1040 (Wiper Module)
- MP Ballast

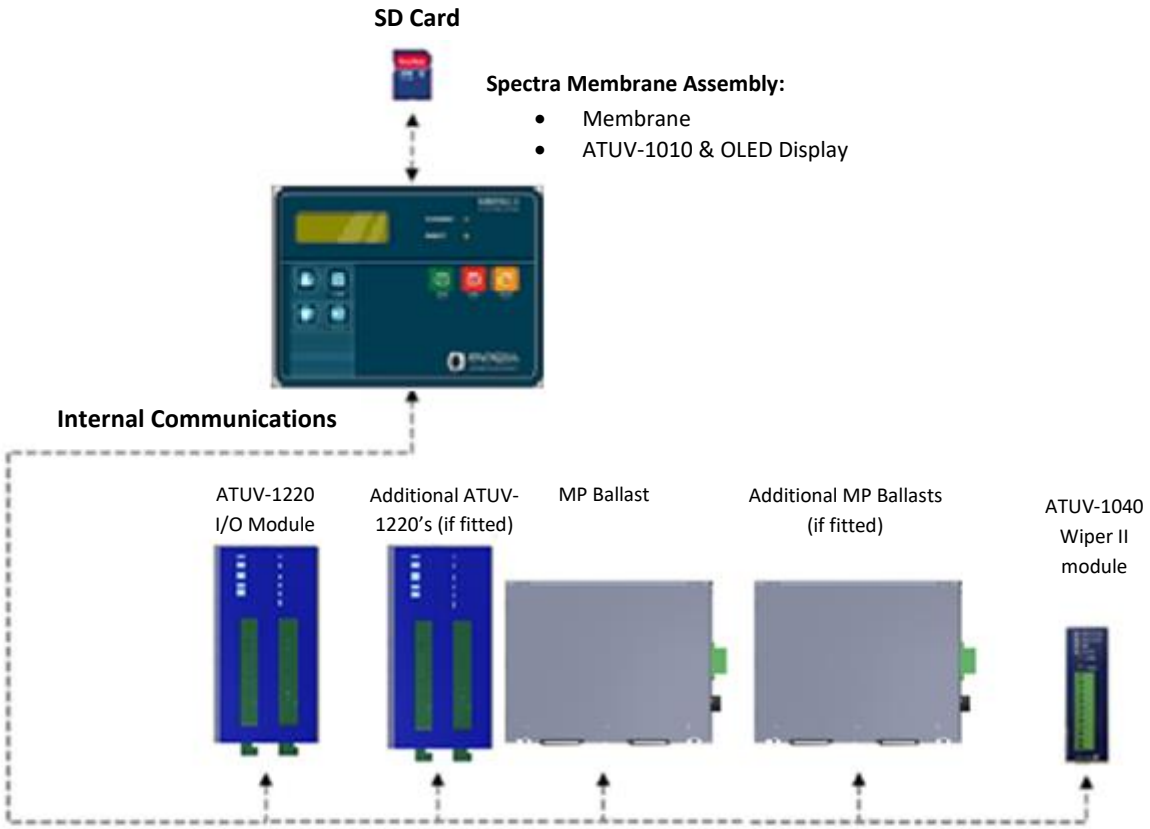

### Spectra Membrane

Spectra control panels are operated via the front utilising a 4 line OLED display and a pushbutton membrane:

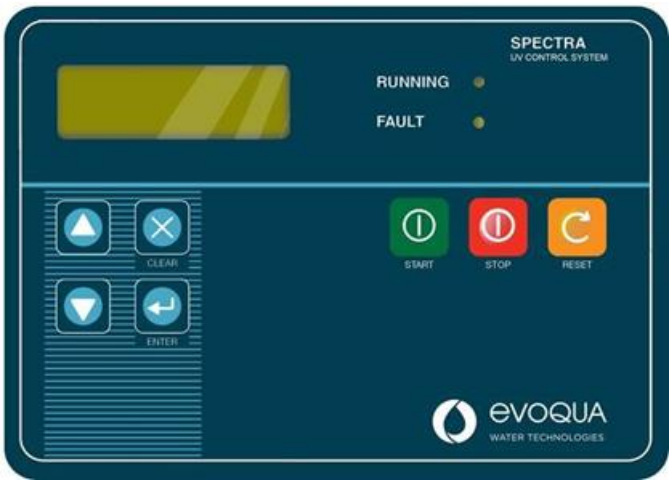


| Feature | Description |
|---|---|
|   | Pressing the Start button activates the start-up sequence, turning on the lamp(s).<br>Note: Pressing Start will have no effect if:<br>• A critical or fatal fault is active<br>• Restrike timer (see below) is running<br>• Spectra is in remote/comms control mode |
|   | Pressing the Stop button will turn off the lamp(s) and start the re-strike timer. This timer will inhibit the lamp(s) from being struck again for a defined period (usually 6-8 minutes) to allow a sufficient cool down time otherwise a strike failure may occur. |
|   | The Reset button is used to re-set any faults that have occurred. If a fault is displayed it is good practice to record the fault and the time/date then reset the fault (if possible unless the fault still exists) and attempt to restart the unit once. |
| RUNNING LED | Illuminates when system is in Running Mode. Flashes quickly in Start-up Mode. Flashes slowly if system is waiting for a signal from the Process Interlock. |
| FAULT LED | Illuminates when there is a fault. If this LED is on but no fault is displayed, scroll through using the up and down arrows until the fault is displayed. |

## ATUV1010 – Main Board

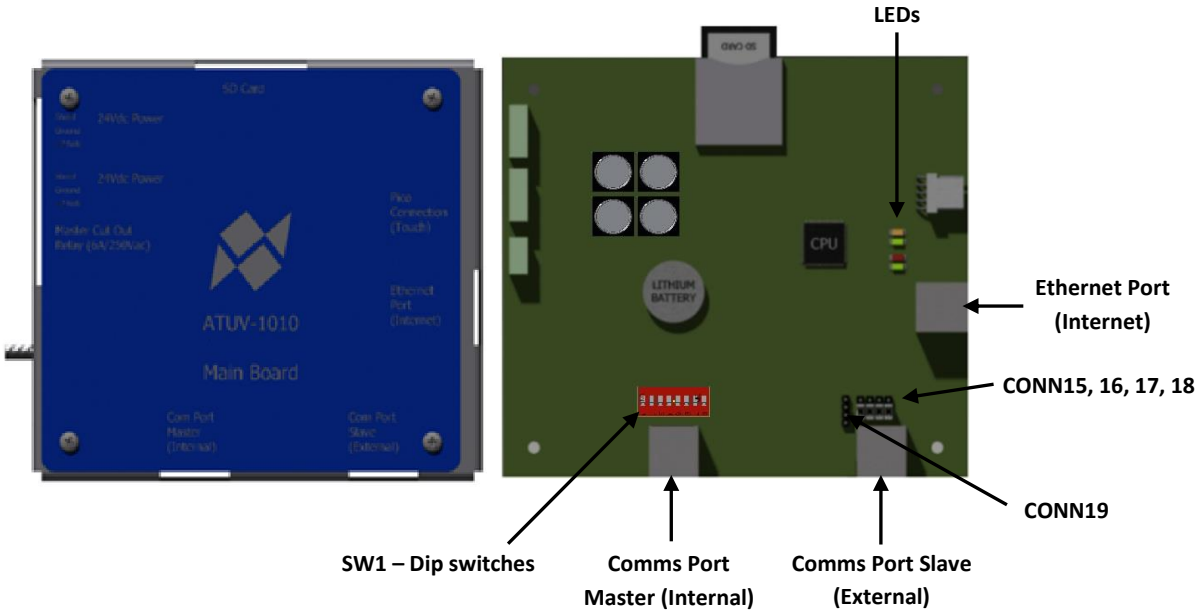


The ATUV-1010 board controls all critical operations including the system operation and customer communications and is the central part of the Spectra control system. All external modules including ATUV-1220, MP Ballast and ATUV-1040 (If fitted) are connected via an internal communications network. The ATUV-1010 also has a removable SD card used for storing various files for the Spectra to operate.

### Comms Port Master (Internal)

This connection provides communications from the ATUV-1010 (Mainboard) to the ATUV-1220 (I/O Module) MP Ballast and ATUV-1040 (If fitted) via a RJ45 connection.

### Comms Port Slave (External)

This connection provides communications from an external Modbus RTU device (master) with the Spectra operating as a slave device with use of an RJ45 connection using Modbus Protocol. The master device should initiate communications, while the Spectra responds to requests accordingly for data or an action to be taken. The Spectra can be assigned a MODBUS SLAVE ADDRESS ranging from 0-99 when being used as a slave on a network. For further information, please refer to the **Modbus Communication** Section.

### Ethernet Port (Internet)

This connection enables the system to monitor and review the Spectra data over the internet. This can be achieved by either using an Ethernet connection with internet access or a Wi-Fi adapter to connect to a Wi-Fi with internet access.

### LED's

The Main board has 4 that are used for status indication.

From Top to Bottom:

| LED | Description | Status | Indication |
|---|---|---|---|
| 3 | (Internal Use Only) | | |
| 4 | This LED indicates if there is power to the Spectra | ON | Power to the Spectra |
| | | OFF | No power to the Spectra |
| 1 | This LED indicates the software status | ON | Software successfully loaded & running correctly |
| | | OFF | Software load fault |
| | | FLASHING | Software loading |
| 2 | This LED indicates the status of the SD card | ON | SD card healthy |
| | | OFF | SD card not healthy or not found |

### Headers

The ATUV-1010 has various headers which are used to configure the communications internally and externally.

### COMM Port Master (Internal Use Only)

**SW1 – Dip Switches**

These dip switches are for internal use only and should not be altered.

### COMM Port Slave (External)

**CONN15, 16, 17, 18**

These pins are used to reverse the polarity of Rx and Tx. As standard, headers should be placed on bottom 2 pins as illustrated in the image above. (For more information, refer to the Modbus Communication section).

**CONN19**

These pins are used to select between 4 wire interface and 2 wire interface. (For more information, refer to the Modbus Communication section).

### SD Card

The SD card stores everything the Spectra needs to function. It stores all the systems variables, the menu structure, the version of Spectra program and log files (if enabled).

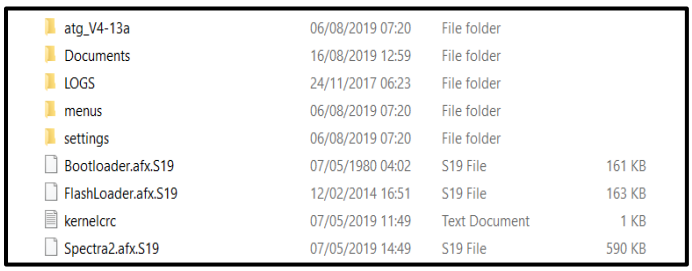


XML Notepad 2007 software is required to edit certain information and variables (.xml files) and can be downloaded for free from the Download Centre on the Microsoft website.

### SD Card Files

#### Setting Files

The following file stores the system parameters:

**Config.xml** - This file stores all the system parameters. Current variables can be altered using XML Notepad simply by opening the file and selecting the desired variable to be changed from the relevant location. For example, see illustration below for editing Flow Rate:

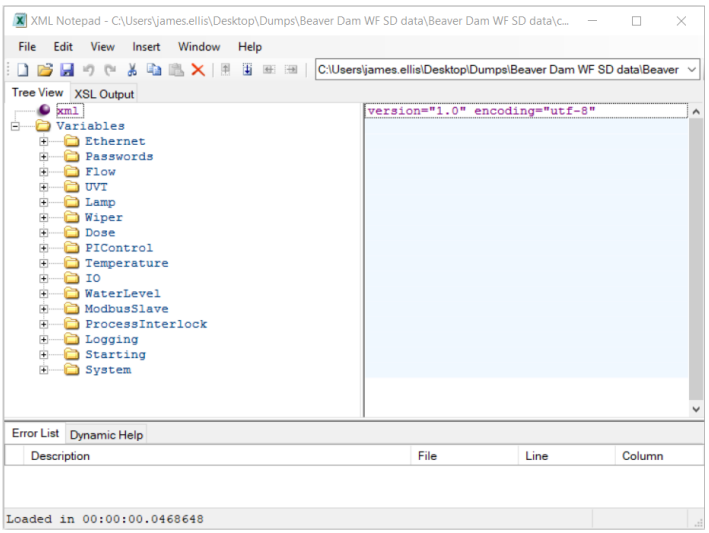


**Note:** When the desired variable/s has been altered, save and close the file.

#### Menu Files

This folder stores all the information relating to the menu structures that appear on the 4 line OLED display. This information is factory set and should not be altered.

#### Software Files (Also located on the Root of the SD Card)

This folder contains the Spectra Software programs. These files should not be altered.

#### Log Files

The following files are not of use to the user, but may be used in the unlikely event of a malfunction.
**Logfile(1).csv** - These files store all the data logs. Each CSV file will contain 1000 records with the latest file being the highest number (For example once Logfile1 reaches 1000 records then Logfile2 will be created.)

## I/O Module (ATUV-1220)

The I/O Module is the main interface module and is located inside the panel consisting of various Analogue/Digital inputs and outputs:

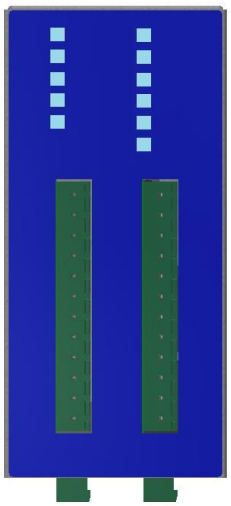

### LEDs

The Digital Input & Output LED lights illuminate when energised and extinguish when de-energised.

For the **Analogue Inputs (UV1, UV2 & AI1)**, each LED indicates the following:

| Condition | Range |
|---|---|
| ON | > 3.5 mA |
| Flashing | > 2mA, < 3.5 mA |
| OFF | < 2mA |

For the **Analogue Outputs**, the following LED's indicate:

| Output | Status |
|---|---|
| AO1 | Communications to the ATUV-1010 (mainboard) is healthy |

To ensure the system is healthy, AO1 LED should be illuminated.

### Inputs/Outputs

Below details the I/O available for **1** I/O Module installed:

| ATUV 1220 I/O Module # 1 |
|---|

| ATUV 1220 I/O Module – Analogue Inputs | |
|---|---|
| **ANALOGUE INPUT (4-20mA)** | |
| **UV1 -** | **UV INTENSITY PROBE 1** |
| Used to connect a 4-20mA output from the UV intensity Probe. | |
| **UV2 -** | **UV INTENSITY PROBE 2** |
| Used to connect a 4-20mA output from the UV intensity Probe. | |
| **AI1** | **SELECTABLE INPUT 1** |
| Selectable Input – See SETUP MENU SCREEN – COMMS & I/O | |
| **TEMP** | **CHAMBER TEMPERATURE INPUT** |
| Used to connect a Temperature sensor (PT100) to measure the temperature at the wall of the chamber. | |

| ATUV 1220 I/O Module – Analogue Outputs | |
|---|---|
| **ANALOGUE OUTPUTS (4-20mA)** | |
| **AO1 -** | **Selectable Output 1** |
| Selectable Output – See SETUP MENU SCREEN – COMMS & I/O | |

| ATUV 1220 I/O Module – Digital Inputs | |
|---|---|
| **DIGITAL INPUTS – For use with Volt Free Contacts – Signal Voltage 24Vdc** | |
| **DI1 -** | **Selectable Digital Input 1*** |
| Selectable Input – See SETUP MENU SCREEN – COMMS & I/O | |
| **DI2 -** | **Selectable Digital Input 2**** |
| Selectable Input – See SETUP MENU SCREEN – COMMS & I/O | |
| **DI3 -** | **Selectable Digital Input 3***** |
| Selectable Input – See SETUP MENU SCREEN – COMMS & I/O | |

*Input is set to **REMOTE START/STOP** as Default

| ATUV 1220 I/O Module – Digital Outputs | |
|---|---|
| **DIGITAL OUTPUTS – Volt Free Contacts 250Vac 3Amp max.** | |
| **DO1 -** | **Selectable Output 1** |
| Selectable Output – See SETUP MENU SCREEN – COMMS & I/O | |
| **DO2 -** | **Selectable Output 2** |
| Selectable Output – See SETUP MENU SCREEN – COMMS & I/O | |
| **DO3 -** | **Selectable Output 3** |
| Selectable Output – See SETUP MENU SCREEN – COMMS & I/O | |

Below details the I/O available for **2** I/O Module's installed:

| ATUV 1220 I/O Module # 1 | ATUV 1220 I/O Module # 2 |
|---|---|

| ATUV 1220 I/O Module – Analogue Inputs | | | |
|---|---|---|---|
| **ANALOGUE INPUT (4-20mA)** | | | |
| **UV1 - UV INTENSITY PROBE 1** | | **UV1 - UV INTENSITY PROBE 3** | |
| Used to connect a 4-20mA output from the UV intensity Probe. | | Used to connect a 4-20mA output from the UV intensity Probe. | |
| **UV2 - UV INTENSITY PROBE 2** | | **UV2 - UV INTENSITY PROBE 4** | |
| Used to connect a 4-20mA output from the UV intensity Probe. | | Used to connect a 4-20mA output from the UV intensity Probe. | |
| **AI1** | **FLOW** | **AI1** | **UVT** |
| Selectable Input – See SETUP MENU SCREEN – COMMS & I/O | | Used to connect a 4-20mA output from the UVT Meter. | |
| **TEMP** | **CHAMBER TEMPERATURE INPUT** | **TEMP** | **Not Used** |
| Used to connect a Temperature sensor (PT100) to measure the temperature at the wall of the chamber. | | | |

| ATUV 1220 I/O Module – Analogue Outputs | | | |
|---|---|---|---|
| **ANALOGUE OUTPUTS (4-20mA)** | | | |
| **AO1 - DOSE** | | **AO2 - UV INTENSITY** | |
| Selectable Output – See SETUP MENU SCREEN – COMMS & I/O | | Used to replicate the (4-20mA) Average UV Intensity | |

| ATUV 1220 I/O Module – Digital Inputs | | | |
|---|---|---|---|
| **DIGITAL INPUTS – For use with Volt Free Contacts – Signal Voltage 24Vdc** | | | |
| **DI1 - REMOTE START/STOP** | | **DI1 - Water Level Healthy** | |
| Selectable Input – See SETUP MENU SCREEN – COMMS & I/O | | Used to monitor the water level in the Chamber | |
| **DI2 - BOOST** | | **DI2 - Reset Alarms** | |
| Selectable Input – See SETUP MENU SCREEN – COMMS & I/O | | Used to Reset Alarms/Faults | |
| **DI3 - PROCESS INTERLOCK - INTERRUPT** | | **DI3 - Low Power** | |
| Selectable Input – See SETUP MENU SCREEN – COMMS & I/O | | Used to force the system into Low Power mode | |

| ATUV 1220 I/O Module # 1 | ATUV 1220 I/O Module # 2 |
|---|---|

| ATUV 1220 I/O Module – Digital Outputs | | | |
|---|---|---|---|
| **DIGITAL OUTPUTS – Volt Free Contacts 250Vac 3Amp max.** | | | |
| **DO1 - Selectable Output 1** | | **DO1 - Selectable Output 1** | |
| Selectable Output – See SETUP MENU SCREEN – COMMS & I/O | | Selectable Output – See SETUP MENU SCREEN – COMMS & I/O | |
| **DO2 - Selectable Output 2** | | **DO2 - Selectable Output 2** | |
| Selectable Output – See SETUP MENU SCREEN – COMMS & I/O | | Selectable Output – See SETUP MENU SCREEN – COMMS & I/O | |
| **DO3 - Selectable Output 3** | | **DO3 - Selectable Output 3** | |
| Selectable Output – See SETUP MENU SCREEN – COMMS & I/O | | Selectable Output – See SETUP MENU SCREEN – COMMS & I/O | |

## Connections

Below shows the ATUV-1220 terminal connections depending on whether 1 or 2 I/O modules are installed:

**1 X ATUV 1220 I/O MODULE**

**I/O Module # 1**

| Terminal | Header 1 Analogue In/Out | | | Header 2 Digital In / Out | | |
|---|---|---|---|---|---|---|
| 1 | UV1 | UV1 | + | DI1 | Selectable Digital Input 1 | + |
| 2 | | | - | | | - |
| 3 | UV2 | UV2 | + | DI2 | Selectable Digital Input 2 | + |
| 4 | | | - | | | - |
| 5 | AI1 | Selectable Analogue Input 1 | + | DI3 | Selectable Digital Input 3 | + |
| 6 | | | - | | | - |
| 7 | AO1 | Selectable Analogue Output 1 | + | DO1 | Selectable digital Output 1 | |
| 8 | | | - | | | |
| 9 | | N/A | | DO2 | Selectable digital Output 2 | |
| 10 | TEMP | Chamber Temp (PT100) (Internal Use) | + | | | |
| 11 | | | + | DO3 | Selectable digital Output 3 | |
| 12 | | | - | | | |

**2 X ATUV 1220 I/O MODULE**

**I/O Module # 1**

| Terminal | Header 1 Analogue In/Out | | | Header 2 Digital In / Out | | |
|---|---|---|---|---|---|---|
| 1 | UV1 | UV1 | + | DI1 | Remote Start/Stop | + |
| 2 | | | - | | | - |
| 3 | UV2 | UV2 | + | DI2 | Boost | + |
| 4 | | | - | | | - |
| 5 | AI1 | Flow | + | DI3 | Process Interlock | + |
| 6 | | | - | | | - |
| 7 | AO1 | Dose | + | DO1 | Selectable digital Output 1 | |
| 8 | | | - | | | |
| 9 | | N/A | | DO2 | Selectable digital Output 2 | |
| 10 | TEMP | Chamber Temp (PT100) (Internal Use) | + | | | |
| 11 | | | + | DO3 | Selectable digital Output 3 | |
| 12 | | | - | | | |

**I/O Module # 2**

| Terminal | Header 1 Analogue In/Out | | | Header 2 Digital In / Out | | |
|---|---|---|---|---|---|---|
| 1 | UV1 | UV3 | + | DI1 | Water Level Healthy | + |
| 2 | | | - | | | - |
| 3 | UV2 | UV4 | + | DI2 | Reset Alarms | + |
| 4 | | | - | | | - |
| 5 | AI1 | UVT | + | DI3 | Low Power | + |
| 6 | | | - | | | - |
| 7 | AO1 | UV Intensity | + | DO1 | Selectable digital Output 1 | |
| 8 | | | - | | | |
| 9 | | N/A | | DO2 | Selectable digital Output 2 | |
| 10 | TEMP | N/A | | | | |
| 11 | | | | DO3 | Selectable digital Output 3 | |
| 12 | | | | | | |

## Medium Pressure Lamp Driver (4.0kW)

The Medium Pressure (MP) Lamp Driver is a device used to start and control medium pressure gas discharge lamps. The ballast operates at high frequencies controlling the power to the lamps with its dimming capabilities.

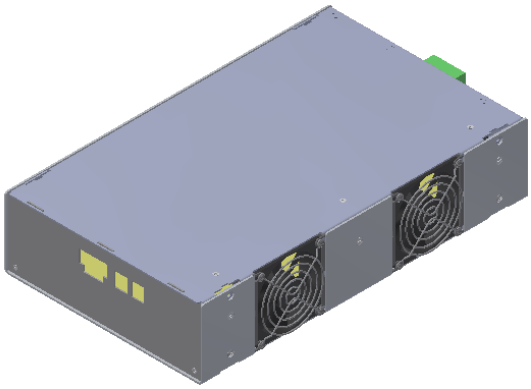

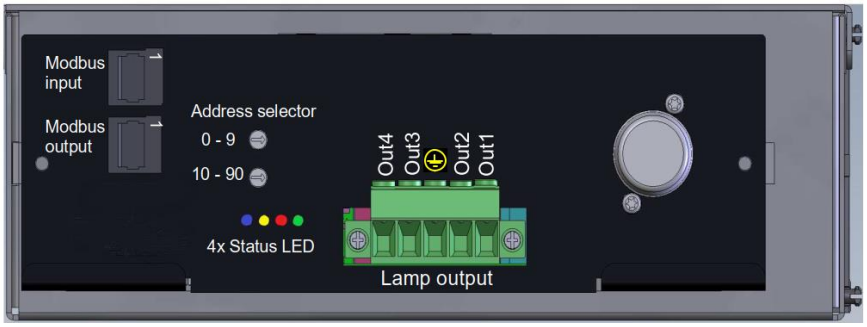


### Status LED's

The MPB Lamp Driver has 4 LED's that display its current status. Please see below for what each LED represents:

| LED | Description |
|---|---|
| BLUE | **OFF:** Lamp Driver in Standby/Idle<br>**Flashing 0.1s ON 0.1s OFF:** Lamp Driver in ignition state<br>**Flashing 0.1s ON 2.0s OF:** Lamp Driver in cooldown state<br>**Flashing 1.0s ON 1.0s OFF:** Lamp Driver in warmup state<br>**ON**: Lamp ON |
| RED | **ON**: Internal Fault<br>**Flashing**: Communication fault or configuration fault |
| YELLOW | Switched ON during communication frame reception or sending – quick flashing indicates communication to/from the Spectra |
| GREEN | **ON**: Device Powered |

### Modbus Address

The MP Lamp Driver supports Modbus Communications Protocol only and is incorporated into the Lamp Driver. The Spectra control system communicates to the MP Lamp Driver via Modbus.

To set-up each Lamp Driver Modbus node address, the rotary BCD switches are used. The address extends from 01 to 99 (Dec).

**Note:** The node address cannot be changed during runtime, power to the Lamp Driver will require recycling to confirm node address. Please ensure around 15secs between recycling power to the control panel.

**Important!** The Lamp Driver Start Address = 20 and proceeds' consecutively.

BCD switch 10 - 90

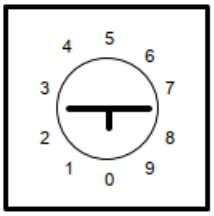


BCD switch 0 - 9

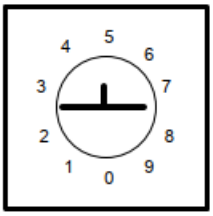


**Example**: If the node address should be 05, set the top BCD switch to 0, and the bottom BCD switch to 5.

## Start-up Sequence

The following conditions must be achieved for the system to go into Running Mode:

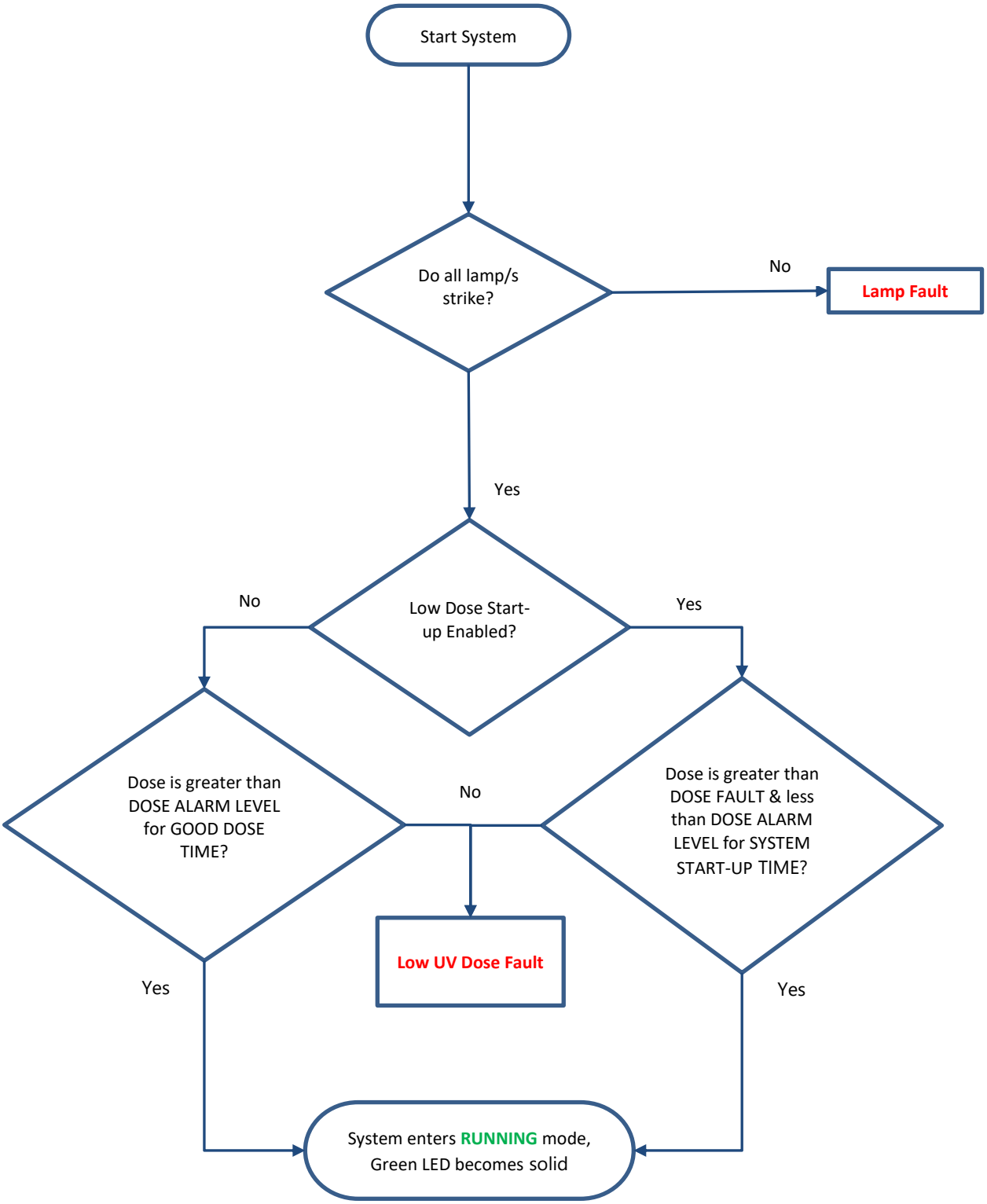

# Spectra Operation

## Main Screens

Additional functions of the Spectra are accessed via the keypad on the Membrane. The keypad has the buttons Up, Down, Enter and Clear which allow the operator to scroll through the screens, enter values and select various control options.

| Menu Navigation | |
|---|---|
|  | Use these keys to scroll up and down the menu |
|   | Press this key to enter the Menu or variable |
|   | Pressing this button moves back up one level in the menu structure.<br>When ready to exit the screen, pressing this button will take you back to the Main information screens |

| Modifying Variables | |
|---|---|
|  | Use these keys to modify / select the relevant variables |
|   | Press this key to accept the changes made to the variable |
|   | Pressing this button returns you to the previous screen without accepting the changes made |

The main information screens shown below can be scrolled through using the up and down arrows. These screens provide details about the systems running condition including; lamp current, flow rate and UV Dose.
Pressing Enter on certain screens will give more information, e.g. pressing enter on the lamp current screen will show the individual lamp information (e.g. lamp current, hours and strikes) if more than one lamp is in use, the up and down arrows can be used to view other lamps information.

**NOTE:** Pressing the Clear button will always move back out of the current menu to the previous screen. Should more than one fault occur, the fault screen with the highest priority will be displayed. Pressing DOWN on the keypad accesses the lower priority screens. Once the cause of the alarm or fault has been rectified, pressing the reset button on the front membrane will reset the alarm.

## Navigating the Main Information Screens

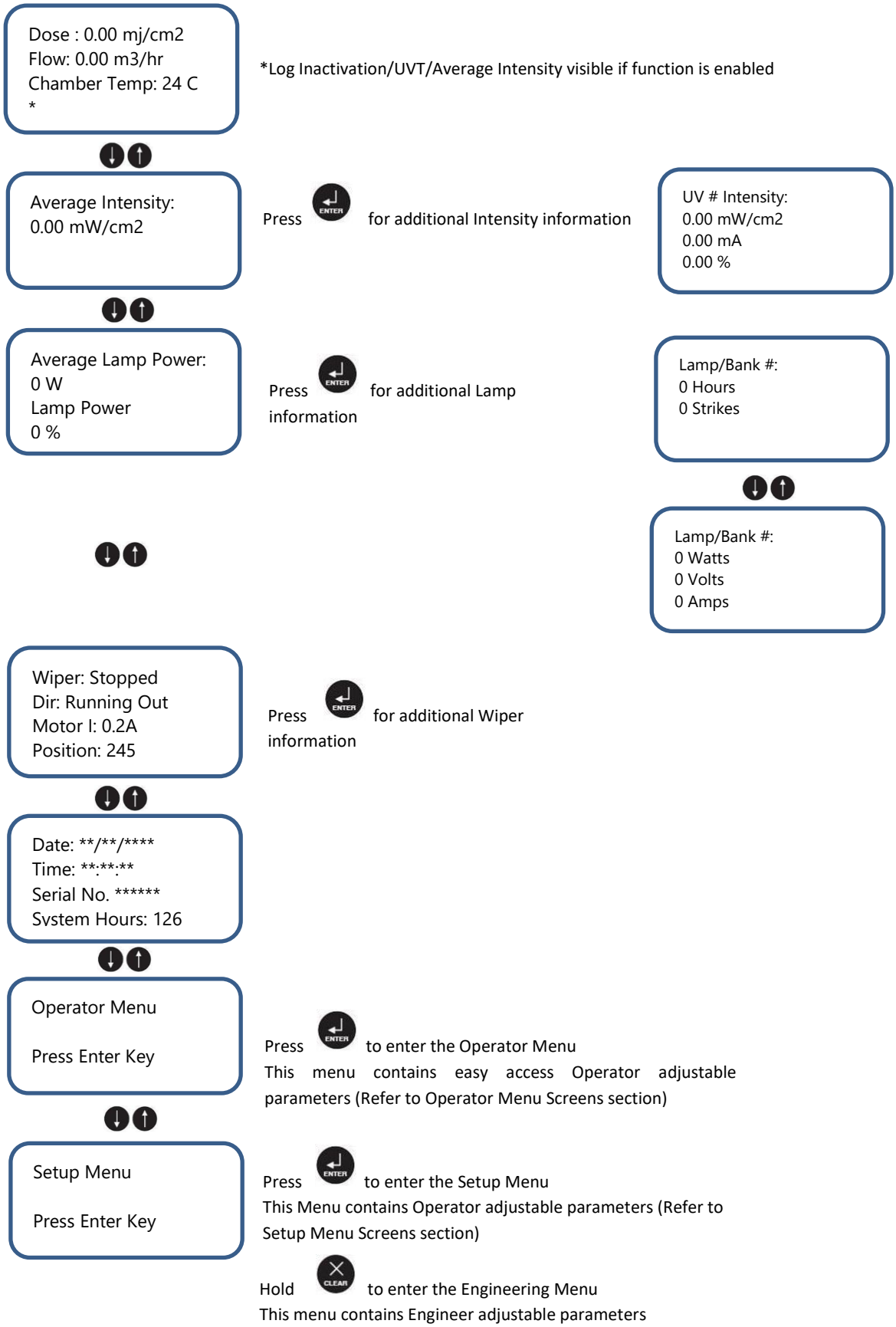

## Fault Screens

The tables below describe the 3 different types of faults that the Spectra displays:

- Fatal Faults
- Critical Faults
- Non-Critical Alarms

| Fault Screen Descriptions | | |
|---|---|---|
| **Fatal Faults - Shuts the system down and will require a manual reset before the system can be restarted** | | |
| | **I/O Communications Watchdog** | |
| | | Communications to the common IO module has been lost |
| | **Electronic Ballast Communications Watchdog** | |
| | | Communications to the Electronic Ballast has been lost |
| | **Local Stop Fault** | |
| | | The unit has been stopped using the local stop button when selected to remote run. Press reset to allow the unit to restart from remote. For safety reasons this alarm is not resettable via the Modbus communications if fitted. |
| **Critical Faults - Shuts the system down and will require a manual reset before the system can be restarted.** | | |
| | **Control Panel Over Temperature** | |
| | | Control Panel has exceeded its CONTROL PANEL TEMP FAULT set point. |
| | **UV Reactor Over Temperature** | |
| | | Chamber Temperature has exceeded FAULT TEMPERATURE set point. |
| | **Ballast/Lamp Fault** | |
| | | **Lamp Open Circuit** – Lamp defect or not connected<br>**Lamp Short Circuit** – Lamp driver detected a short circuit/low resistance<br>**Lamp/Wiring** - Lamp running outside correct operating conditions or lamp side circuit wiring error<br>**Lamp Earth Leakage** - Earth Leakage detected in lamp side circuit<br>**Ballast Supply** - Power Supply to ballast outside required operating conditions<br>**Ballast Temperature** - Ballast internal temperature outside operational range<br>**Ballast Fan** – Lamp driver fan fault or incorrect RPM<br>**Ballast Internal** - Ballast Internal fault<br>**Ballast Communications** – Communications to the Spectra has failed |

| Fault Screen Descriptions (Cont.) | | |
|---|---|---|
| | **Low UV Dose** | |
| | | Actual Dose is less than DOSE FAULT LEVEL for low dose time. |
| | **Process Interlock Shutdown** | |
| | | The Process Interlock input has de-energised whilst unit was running. The unit will require a manual reset to re-start. |
| | **Water Level Low** | |
| | | Water level has dropped below allowable level |
| | **SD Card Not Inserted** | |
| | | SD card is not inserted or corrupt |
| | **I/O Module Not Calibrated** | |
| | | ATUV-1220 requires calibrating |
| | **I/O Modules Less Than Expected** | |
| | | Number of I/O modules detected less than specified |
| | **Electronic Ballasts Less Than Expected** | |
| | | Number of Electronic Ballasts detected less than specified |
| | **Flow Meter Out of Range** | |
| | | The flow meter input is outside the 4mA and 20mA tolerances |
| **Non-Critical Alarms – Displays the Fault/Alarm but will allow the system to continue running** | | |
| | **Process Interlock Interrupt** | |
| | | The Process Interlock input has de-energised whilst unit was running. The unit will re-start after the signal is regained and the re-strike period has elapsed. |
| | **Low UV Dose** | |
| | | Actual Dose is less than DOSE ALARM LEVEL for low dose time. |
| | **Wiper** | |
| | | Triggered by loss of Unit Healthy output from quartz wiper unit. If ATUV-1040 is fitted, press Enter to review the fault in more detail. Refer to the Automatic Wiping section of the manual. |
| | **Lamp Approaching End of Life** | |
| | | Lamp run hours have exceeded lamp life set point and is recommended to be replaced. |
| | **UV Reactor Over Temperature** | |
| | | Chamber Temperature has exceeded ALARM TEMPERATURE set point. |
| | **Power Loss When Running** | |
| | | Power to the system has been lost while the lamp were running |

The Spectra also displays other priority information that the operator may find useful:

| OTHER PRIORITY SCREENS | | |
|---|---|---|
| | **Re-Strike Timer Running** | |
| | | Indicated the restrike time remaining until the lamps can be re-struck |

**Note:** For details on how to Troubleshoot the above faults, please refer to the **Troubleshooting** section at the end of this Manual

## Operator Menu Screens

This menu screen contains easy access operator adjustable parameters:

| Menu | Variable |
|---|---|
| Operator | System Control Mode |
| | Fixed Flow Rate |
| | Flow Meter Source |
| | Power Control Mode |
| | Calibrate Wiper |
| | Force Wiper Run |
| | Wiper Service Position |

| OPERATOR | > | SYSTEM CONTROL MODE | |
|---|---|---|---|
| Description:<br>Used to select how to start/stop the system either locally or remotely | | | |
| Selectable Values | * | Local | System can only Start/Stop by pressing Start on the Spectra |
| | | Remote | System can Start/Stop remotely via a closed hardwired signal into DI1 on ATUV-1220. Can also be stopped via the Spectra for emergency purposes. |
| | | Comms | System can Start/Stop via external comms. Can also be stopped via the Spectra for emergency purposes. |

| FLOW | > | FIXED FLOW RATE* |
|---|---|---|
| Description:<br>This value will be used as the flow rate during the start-up period. If no flow meter is set up this value will be used as the constant flow rate. | | |
| Selectable Values | 0-9000 | $m^3/hr$ |
| | 0-943.5 | BPM |
| | 0-57.1 | MGD |
| | 0-39624.5 | GPM |
| | 0-216 | Ml/d |
| | 0-2499.5 | l/s |

*For default Fixed Flow Rate refer to Product Flow Information Table in the **Installation, Commissioning & Calibration** Section

| OPERATOR | > | FLOW SOURCE | |
|---|---|---|---|
| Description:<br>Used to select what flow meter value is to be used when the system is in running mode. During start-up FLOW RATE will always be used | | | |
| Selectable Values | * | FIXED | Fixed Value |
| | | ANOLOGUE | 4-20 mA Flow Meter Input |
| | | COMMS | Flow Signal via Comms |

| OPERATOR | > | POWER CONTROL MODE | |
|---|---|---|---|
| Description:<br>Used to select the power control required | | | |
| Selectable Values | * | FULL POWER | Force panel to Full power |
| | | VARIABLE POWER | Controls Lamps around DOSE SET-POINT |
| | | LOW POWER | Force panel to Low power |

| OPERATOR | > | CALIBRATE WIPER |
|---|---|---|
| Description:<br>Used to initiate the Wiper calibration process. | | |
| Selectable Values | * | No |
| | | Yes |

| OPERATOR | > | FORCE WIPER RUN |
|---|---|---|
| Description:<br>Used to force the wiper to perform a full sweep. | | |
| Selectable Values | * | No |
| | | Yes |

| OPERATOR | > | WIPER SERVICE POSITION |
|---|---|---|
| Description:<br>Used to park the wiper carriage 30% the length of the chamber to assist with quartz extraction during maintenance.<br>**Note:** When performing this function, the Wiper will lose its calibration memory, therefore will require re-calibrating when maintenance is complete. | | |
| Selectable Values | * | No |
| | | Yes |

## Setup Menu Screens

The Setup Menu Screens allow the operator to alter the way the system will run by changing the system variables

**Warning – Altering variables can stop the system working correctly: only suitably qualified persons should alter any of the system variables**

- To enter the setup menu screen as an operator, press enter on the set-up screen
- Enter the **A T G** Password using the up and down arrows and the enter key
- Pressing clear at any point will return you back you to the main screens

| MENU | VARIABLE | MENU | VARIABLE | |
|---|---|---|---|---|
| | | | 1 x I/O Module | 2 x I/O Module |
| FLOW | Fixed Flow Rate | COMMS and I/O | Analogue Output 1 Source | I/O Module 1 – Digital 0utput 2 & 3 Source |
| | Flow Units | | Digital Input 1, 2 & 3 Source | I/O Module 2 – Digital Input 1, 2 & 3 Source |
| | Flow Source | | Digital Output 2 & 3 Source | |
| | Flow Meter Max | | Water Level Low Delay | |
| LAMP | Restrike Time | | Modbus Slave Address | |
| | Lamps In Use | | DHCP | |
| | Maximum Lamp Power | | IP Settings | |
| | Minimum Lamp Power | | DNS | |
| | Reset Individual Lamp hours | PROCESS INTERLOCK | Process Interlock Mode | |
| | Reset All Lamp Hours | | Process Interlock Action | |
| DOSE | Dose Units | | Process Interlock Delay | |
| | Dose Set-Point | WIPER | Wiper Type | |
| | Dose Alarm | | Wiper Run Interval | |
| | Dose Fault | | Wiper Low Dose Time | |
| | Good Dose Time | | Wipe on Low Dose | |
| | Low Dose Time | UVT | UVT Source | |
| | Low Dose End Time | | Fixed UVT | |
| | Low Dose Start-up | | UVT Meter Max | |
| | UV Sensors In Use | MISCELLANEOUS | Auto Restart | |
| | Intensity Units | | Change Password? | |
| | UV Sensor Max | | Time | |
| | UV Dose Max | | Date | |
| | Low Power Sw. Mode | | Reset Defaults | |
| | Low Power Timing | | | |
| | Low Power Set-Point | | | |
| TEMPERATURE | Temperature Units | | | |
| | Chamber Temperature Alarm | | | |
| | Chamber Temperature Fault | | | |
| | Chamber Temperature Alarm Dead-band | | | |
| | Panel Temperature Fault | | | |

## Navigating the Setup Screen

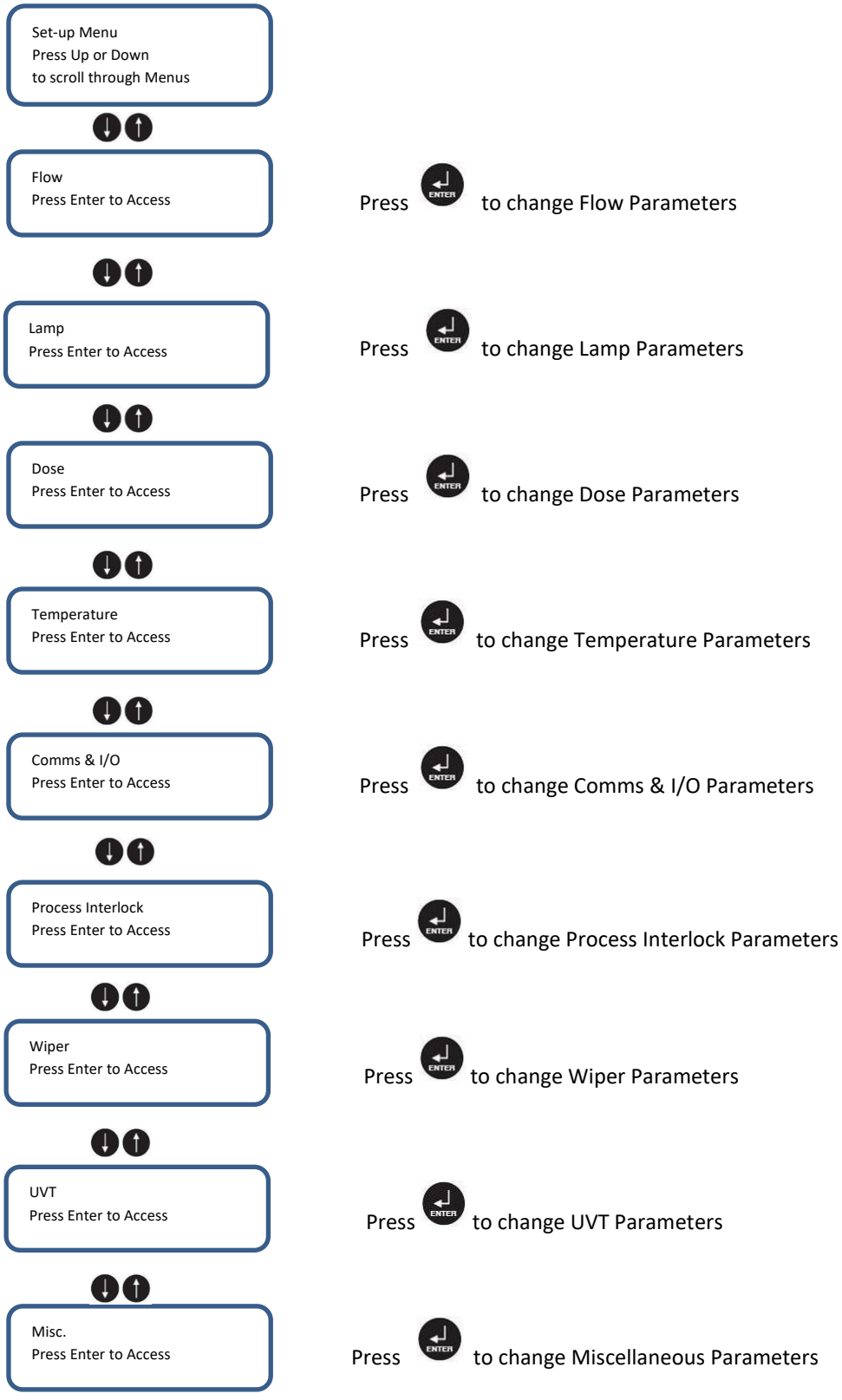

## Setup Menu - Parameter Descriptions

### Flow

| FLOW | > | FIXED FLOW RATE* | |
|---|---|---|---|
| Description:<br>This value will be used as the flow rate during the start-up period. If no flow meter is set up this value will be used as the constant flow rate. | | | |
| Selectable Values | | 0-9000 | $m^3/hr$ |
| | | 0-943.5 | BPM |
| | | 0-57.1 | MGD |
| | | 0-39624.5 | GPM |
| | | 0-216 | Ml/d |
| | | 0-2499.5 | l/s |

*For default Fixed Flow Rate refer to Product Flow Information Table in the **Installation, Commissioning & Calibration** Section

| FLOW | > | FLOW UNITS | |
|---|---|---|---|
| Description:<br>Used to select which flow units are required. | | | |
| Selectable Values | * | $m^3/hr$ | Cubic metres per hour |
| | | BPM | Barrels per minute |
| | | MGD | Million gallons (US) per day |
| | | GPM | Gallons (US) per day |
| | | Ml/d | Million litres per day |
| | | l/s | Litres per second |

| FLOW | > | FLOW SOURCE | |
|---|---|---|---|
| Description:<br>Is used to select what flow meter value is to be used when the system is in running mode.<br>During start-up FLOW RATE will always be used. | | | |
| Selectable Values | * | STATIC FLOW | Fixed Value |
| | | COMMS | Flow Signal via Comms |
| | | FLOW METER | 4-20mA Flow Meter Input |

| FLOW | > | FLOW METER MAX | |
|---|---|---|---|
| Description:<br>Used to convert flow meter input (in mA) to the actual flow rate. The flow meter reading at 20 mA should be entered. | | | |
| Selectable Values | * | 0-9000 | $m^3/hr$ |
| | | 0-943.5 | BPM |
| | | 0-56.9 | MGD |
| | | 0-39624.5 | GPM |
| | | 0-216 | Ml/d |
| | | 0-2499.5 | l/s |

## Lamp

| LAMP | > | RESTRIKE TIME | |
|---|---|---|---|
| Description:<br>Used to set the time required for the lamp to cool sufficiently to allow re-strike.<br>(This value is usually set to 6 or 8mins depending on lamp type) | | | |
| Selectable Values | 0 – 60 | | Minutes |

| LAMP | > | LAMPS/BANKS IN USE |
|---|---|---|
| Description:<br>Used to select which lamps should be used. | | |
| LMP = 1234<br>USE =YYYY | Use the up and down arrows to select Y to use the lamp and N to disable it. Press enter to move to the next lamp and confirm the selections. | |

| LAMP | > | MAXIMUM LAMP POWER | |
|---|---|---|---|
| Description:<br>Used to set the Maximum power for the lamp. | | | |
| Selectable Values | 150 – 3000 | | Watts |

| LAMP | > | MINIMUM LAMP POWER | |
|---|---|---|---|
| Description:<br>Used to set the Minimum power for the lamp. | | | |
| Selectable Values | 450 – 3000 | | Watts |

| LAMP | > | RESET INDIVIDUAL LAMP HOURS | > | RESET LAMP # HRS |
|---|---|---|---|---|
| Description:<br>Is used to reset individual lamp life hours and strikes upon replacing a specific lamp. Use the up and down arrows to scroll through the different lamps and press enter to select Yes to reset the hours for that particular lamp. | | | | |
| Selectable Values | Yes | | | |
| | No | | | |

| LAMP | > | RESET ALL LAMP HOURS |
|---|---|---|
| Description:<br>Is used to reset lamp life hours and strikes for all lamps. Press Enter to select Yes to Reset ALL lamp hour counters. | | |
| Selectable Values | Yes | |
| | No | |

## Dose

| DOSE | > | DOSE UNITS | |
|---|---|---|---|
| **Description:**<br>Working DOSE units can be selected. | | | |
| **Selectable Values** | * | $mJ/cm^2$ | |
| | | $J/m^2$ | |
| | | $J/cm^2$ | |

| DOSE | > | DOSE SET-POINT | |
|---|---|---|---|
| **Description:**<br>Used to set the target Dose. (Used for control mode) | | | |
| **Selectable Values** | 0 – 5,000 | | $mJ/cm^2$ |
| | 0 – 50,000 | | $J/m^2$ |
| | 0.00 – 5.00 | | $J/cm^2$ |

| DOSE | > | DOSE ALARM | |
|---|---|---|---|
| **Description:**<br>When the measured dose drops below the alarm value for LOW DOSE TIME, the unit will display a non-critical alarm and will continue to run. | | | |
| **Selectable Values** | 1 – 5,000 | | $mJ/cm^2$ |
| | 1 – 50,000 | | $J/m^2$ |
| | 0.01 – 5.00 | | $J/cm^2$ |

| DOSE | > | DOSE FAULT | |
|---|---|---|---|
| **Description:**<br>When the measured dose drops below the fault value for LOW DOSE TIME, the unit will display a critical alarm and will shut down.<br>DOSE FAULT LEVEL must be less than DOSE ALARM LEVEL | | | |
| **Selectable Values** | 0 – 5,000 | | $mJ/cm^2$ |
| | 0 – 50,000 | | $J/m^2$ |
| | 0.00 – 5.00 | | $J/cm^2$ |

| DOSE | > | GOOD DOSE TIME | |
|---|---|---|---|
| Description:<br>The measured Dose must be greater than the ALARM LEVEL for the GOOD DOSE TIME in order for the system to switch into Running mode.<br>(This value is usually set to 15) | | | |
| Selectable Values | 0 – 120 | | Seconds |

| DOSE | > | LOW DOSE TIME | |
|---|---|---|---|
| Description:<br>This variable sets the length of time the measured dose can drop below the Alarm or Fault values before activating the Alarm or Fault.<br>(This value is usually set to 30) | | | |
| Selectable Values | | 0 – 60 | Seconds |

| DOSE | > | LOW DOSE END TIME | |
|---|---|---|---|
| Description:<br>Sets the length of time a measured good dose must be seen in order to end the low dose timer and set the system back to normal running conditions. | | | |
| Selectable Values | * | 10-15 | Seconds |

| DOSE | > | LOW DOSE STARTUP | |
|---|---|---|---|
| Description:<br>Used to define whether the system will go into running mode if the measured dose is greater than FAULT LEVEL but less than ALARM LEVEL.<br>If enabled the unit will go into running mode once FAULT LEVEL has been exceeded for 5 mins, but the Low dose alarm activate if ALARM LEVEL is not reached.<br>(This value is usually set to Disabled) | | | |
| Selectable Values | * | Disabled | |
| | | Enabled | |

| DOSE | > | UV SENSORS IN USE |
|---|---|---|
| Description:<br>Used to select which sensors should be used. | | |
| SNSR = 1234<br>USE =YYYY | | Use the up and down arrows to select Y to use the sensor and N to disable it. Press enter to move to the next sensor and confirm the selections. |

| DOSE | > | INTENSITY UNITS | |
|---|---|---|---|
| Description:<br>Working INTENSITY units can be selected. | | | |
| Selectable Values | * | mW/cm² | |
| | | W/m² | |

| DOSE | > | UV SENSOR MAX | |
|---|---|---|---|
| Description:<br>Used to convert UV sensor input to the actual UV intensity.<br>The UV reading at 20 mA should be entered. | | | |
| Selectable Values | 0 – 1,000 | | $mW/cm^2$ |
| | 0 – 10,000 | | $W/m^2$ |

| DOSE | > | UV SENSOR MAX | |
|---|---|---|---|
| Description:<br>Used to convert UV sensor input to the actual UV intensity.<br>The UV reading at 20 mA should be entered. | | | |
| Selectable Values | 0 – 1,000 | | $mW/cm^2$ |
| | 0 – 10,000 | | $W/m^2$ |

| COMMS | > | UV DOSE MAX |
|---|---|---|
| Description:<br>The value selected equates to 20mA output.<br>Used if the Analogue Output is set to **DOSE**. | | |
| Selectable Values | 0 - 5000 | |

| DOSE | > | LOW POWER SWITCH | |
|---|---|---|---|
| Description:<br>Used to define how the system switches into one of two low power mode when the external Low Power signal (DI2/DI3) has been energised on the ATUV-1220. The system will enter into low power mode (control delay time expired) and then scale various variables according to the LOW POWER S-P.<br>The original value is multiplied by the LOW POWER S-P (%) to attain the new value. | | | |
| Selectable Values | | DISABLED | External Low Power switch is turned off. |
| | * | DOSE REDUCTION MODE | Used when less treatment is required. The DOSE SET POINT, ALARM and FAULT are all reduced to a defined percentage (this is set in LOW POWER S-P). |
| | | FLOW REDUCTION MODE | Used when the flow rate through the system is reduced and the same level of treatment is required. The flow will reduce from the FLOW RATE to a defined percentage of the FLOW RATE (which is set in LOW POWER S-P). If a flow-meter is being used, the measured flow rate is reduced to a defined percentage (which is set in LOW POWER S-P). |

| DOSE | > | LOW POWER TIMING |
|---|---|---|

Description:
Used to define when the system will switch into low power mode (if LOW POWER TIMING is Enabled). The system will reduce the target DOSE SET-POINT to a pre-determined level at the set times. The LOW POWER SET-POINT variable is used to set the reduction level, this automatically adjusts the DOSE SET-POINT, alarm and fault level to a percentage of the nominal value during low power mode.

| | | |
|---|---|---|
| | Two low power timings per day can be set starting with the earliest time.<br>To copy and set the same low power timings throughout the week, the timings will need to be set on the Sunday Low/Full Power timings first, then copied using the COPY LOW POWER 1/2 option.<br>Please see below for examples. | |
| | To run at low power from 6.30am to 10pm (Monday) | Monday Low Power 1 06.30.00<br>Monday Full Power 1 22.00.00 |
| | To run at low power from 4.30am to 10am and 2pm to 8.45pm (Thursday) | Thursday Low Power 1 04.30.00<br>Thursday Full Power 1 10.00.00<br>Thursday Low Power 2 14.00.00<br>Thursday Full Power 2 20.45.00 |
| | To run at low power from 8.00pm (Monday) to 10am (Tuesday) | Monday Low Power 1 20.00.00<br>Monday Full Power 1 00.00.00<br>Tuesday Low Power 1 00.00.00<br>Tuesday Full Power 1 10.00.00 |

| DOSE | > | LOW POWER SET-POINT |
|---|---|---|

Description:
In “Dose Reduction Mode” this variable is used to reduce the DOSE SET POINT, ALARM and FAULT levels when the system is running in low power mode.
(e.g. Original DOSE SET POINT = 100, LOW POWER S-P = 20%, Ne-w DOSE SET POINT = 20)

In “Flow Reduction Mode” this variable is used to scale the flow rate when the system is running in low power mode. The original value is multiplied by the LOW POWER S-P to attain the new value
(e.g. Original FIXED FLOW RATE = 120, LOW POWER S-P = 40%, New FIXED FLOW RATE = 48).
If LOW POWER S-P is set to 0%, the FLOW RATE value will reduce to 0.01 (units), causing the DOSE to rise dramatically.

| | | |
|---|---|---|
| Selectable Values | 0-99 | % |

## Temperature

| TEMPERATURE | > | TEMP UNITS | |
|---|---|---|---|
| Description:<br>Displayed temperature units can be selected. | | | |
| Selectable Values | Degrees Celsius | | °C |
| | Degrees Fahrenheit | | °F |

| TEMPERATURE | > | CHAMBER TEMP ALARM | |
|---|---|---|---|
| Description:<br>Temperature at which a non-critical alarm is generate if the UV Reactor Temperature exceeds this value | | | |
| Selectable Values | 0 -120 | | °C |
| | 32 – 248 | | °F |

| TEMPERATURE | > | CHAMBER TEMP FAULT | |
|---|---|---|---|
| Description:<br>Temperature at which a critical alarm is generated if the UV Reactor Temperature exceeds this value<br>This value is usually set to 46°C - If this value is set too high it could lead to damaged equipment or injury! | | | |
| Selectable Values | 0 -120 | | °C |
| | 32 - 248 | | °F |

| TEMPERATURE | > | TEMP ALARM D-B | |
|---|---|---|---|
| Description:<br>Temperature reduction required below alarm temperature level before temperature output re-opens | | | |
| Selectable Values | 0 -120 | | °C |
| | 32 – 248 | | °F |

| TEMPERATURE | > | PANEL TEMP FAULT | |
|---|---|---|---|
| Description:<br>Temperature at which a critical alarm is generated if the Control Panel Temperature exceeds this value<br>This value is usually set to 46°C - If this value is set too high it could lead to damaged equipment or injury! | | | |
| Selectable Values | 0 -120 | | °C |
| | 32 – 248 | | °F |

A

## Comms & I/O

| COMMS. | > | ANALOGUE OUTPUT 1 SOURCE | |
|---|---|---|---|
| Description:<br>Used to select the required 4-20mA analogue output from AO1. | | | |
| Selectable Values | | NONE | |
| | | INTENSITY | 0 - 100% of Average Intensity from UV Sensor |
| | | DOSE | 0 - 100% of ANALOGUE OUTPUT 1 MAX |

**Note:** Parameter only available if only 1 x I/O Module installed

| COMMS | > | DIGITAL INPUT 1,2 & 3 SOURCE | |
|---|---|---|---|
| Description:<br>Used to select the digital input function on DI1, DI2 & DI3 | | | |
| Selectable Values | | NONE | |
| | * | REMOTE START/STOP | Used to start & Stop the system remotely |
| | | BOOST | Used to force the lamps to 100% power when the Digital input is energised on the ATUV-1220. |
| | | WATERL LEVEL HEALTHY | Used to set whether a conductivity probe is being used to ensure the chamber is full of water. If enabled the SPECTRA must see the signal before the system will start. If this signal is still lost after the WATER LEVEL DELAY time elapses (pre-set to 15 seconds), a Critical Fault will be generated, and the system will stop running. |
| | | RESET ALARM | Used to Reset any faults that have been rectified |
| | | LOW POWER | Used to reduce the power of the lamps. This will only happen once the system is in running mode and the control mode delay timer has expired |
| | | PROCESS INTERLOCK | If activated the system will respond to the Process Interlock input, stopping the system from running.<br>If selected, please refer to PROCESS INTERLOCK MODE & PROCESS INTEROCK ACTION for further set-up of this output. |

**Note:** Parameter only available if only 1 x I/O Module installed.

*DI1 is set to this input as Default

| COMMS | > | I/O MODULE 1 / 2 – DIGITAL OUTPUT 1, 2 OR 3 | |
|---|---|---|---|
| Description:<br>Used to select the digital output function on DO1*, DO2 & DO3 | | | |
| Selectable Values | | NONE | |
| | | TEMP ALARM | Energises when the Temperature Alarm Level is reached |
| | | REMOTE | Energises when the system is set to run in Remote mode |
| | | DOSE HLTH | Energises when the measured dose is above the Alarm Level |
| | | SYS RUN | Energises when the system is running |
| | | SYSTEM READY | Energises when the following conditions exist: NO critical faults are present, and the re-strike timer is NOT running |
| | | SYSTEM READY REMOTE | Energises when the following conditions exist: NO critical faults are present; the re-strike timer is NOT running and Remote IS selected. |
| | | BREAK GLASS | De-Energises when potential water has been detected by the lamp |
| | | LAMP FAILURE | Energises when a Lamp Fault has been generated |
| | | LOW DOSE ALARM | Energises when the measured dose is above the Alarm Level |
| | | NON-CRITICAL ALARM HEALTHY | Energises when no Non-Critical Alarms are present |
| | | CRITICAL FAULT HEALTHY | Energises when no Critical Alarms are present |
| | | OPEN VALVE | Energises when the system enters Running Mode (Refer to Start-up Sequence) |

*DO1 only selectable on I/O Module # 2 (if installed)

| COMMS | > | WATER LEVEL LOW DELAY | |
|---|---|---|---|
| Description:<br>Sets the time allowed before a conductivity fault is generated after losing the signal. | | | |
| Selectable Values | 0-120 | | Seconds |

| COMMS | > | MODBUS SLAVE ADDRESS | |
|---|---|---|---|
| Description:<br>Address used for external communications via Modbus<br>(This value is usually set to “1”) | | | |
| Selectable Values | 1-99 | | |

| COMMS | > | DHCP ENABLED | |
|---|---|---|---|
| Description:<br>This is used to setup the internet connectivity: If enabled Dynamic Host Client Protocol is active and the network controller will assign the system an IP address.<br>(This value is usually set to “ Enabled”) | | | |
| Selectable Values | * | Enabled | |
| | | Disabled | |

| COMMS | > | IP SETTINGS | |
|---|---|---|---|
| Description:<br>This is used to display the internet connectivity settings. | | | |
| Selectable Values | IP Address | | xxx:xxx:xxx:xxx |
| | Subnet Mask | | xxx:xxx:xxx:xxx |
| | Default Gateway | | xxx:xxx:xxx:xxx |

| COMMS | > | DNS | |
|---|---|---|---|
| Description:<br>This is used to setup the internet connectivity: If set to 0 then the Gateway DNS Server will be used, this is the normal setting. | | | |
| Selectable Values | xxx:xxx:xxx:xxx | | |

### Process Interlock

| COMMS | > | PROCESS INTERLOCK MODE | |
|---|---|---|---|
| Description:<br>Set whether process interlock function is activated.<br>If activated the system will respond to the process interlock input. | | | |
| Selectable Values | * | DISABLED | |
| | | RUNNING | Process interlock feedback will only be required when the system has entered running mode |
| | | FULL | System must see interlock feedback before starting |

| COMMS | > | PROCESS INTERLOCK ACTION | |
|---|---|---|---|
| Description:<br>Defines the action to be taken if the process interlock signal is removed. | | | |
| Selectable Values | | INTERRUPT | This will temporary stop the system until the signal is regained (Note: The re-strike timer must also have expired in order for the system to restart) |
| | | SHUT-DOWN | This will stop the system until the signal is regained and is manually restarted using the SPECTRA control interface. |

| COMMS | > | PROCESS INTERLOCK DELAY | |
|---|---|---|---|
| Description:<br>Set the time the PROCESS INTERLOCK input (DI8) must be broken before the interlock action is generated | | | |
| Selectable Values | 0 – 180 | | Seconds |

## Wiper

| WIPER | > | WIPER TYPE | |
|---|---|---|---|
| Description:<br>Used to select which wiper system is being used | | | |
| Selectable Values | None | | No Wiper is being used |
| | Wiper I | | AT-630 Wiper Module is being used |
| | Wiper II | | ATUV-1040 Wiper Module is being used |

| WIPER | > | WIPER RUN INTERVAL | |
|---|---|---|---|
| Description:<br>Used to define the length of time between each Wiper sweep | | | |
| Selectable Values | ###.# | | Hours |

| WIPER | > | WIPER LOW DOSE TIME | |
|---|---|---|---|
| Description:<br>Used to extend the Low Dose Time parameter for when the wiper is running. | | | |
| Selectable Values | ### | | Seconds |

| WIPER | > | WIPE ON LOW DOSE | |
|---|---|---|---|
| Description:<br>Used to select whether a Wipe is initiated upon a Low Dose Alarm | | | |
| Selectable Values | * | Disabled | Wiper will not sweep upon Low Dose Alarm |
| | | Enabled | Wiper will sweep upon Low Dose Alarm |

## UVT

| UVT | > | UVT SOURCE | |
|---|---|---|---|
| Description:<br>Used to select which UVT valve is used from which source. | | | |
| Selectable Values | | Disabled | |
| | | Comms | UVT valve via Comms |
| | | Analogue | 4-20mA meter input via AI1 |
| | | Static | Fixed valve |

| UVT | > | FIXED UVT | |
|---|---|---|---|
| Description:<br>Used to select the fixed UVT valve. | | | |
| Selectable Values | 0-100 | % | |

| UVT | > | UVT METER MAX | |
|---|---|---|---|
| Description:<br>Used to convert the UVT meter input (in mA) to the actual UVT. The UVT meter reading at 20mA should be entered. | | | |
| Selectable Values | 0-100 | % | |

## Miscellaneous

| MISC. | > | AUTO RESTART | |
|---|---|---|---|
| Description:<br>Defines whether the system will attempt to restart after a power failure when the lamp/s were running. If a power failure does occur while the system was running, it will generate a POWER LOSS WHEN RUNNING alarm.<br>(This value is usually set to DISABLED) | | | |
| Selectable Values | * | DISABLED | |
| | | ENABLED | |

| MISC. | > | CHANGE PASSWORD? |
|---|---|---|
| Description:<br>Change the operator user password.<br>(This value is usually set to “atg”) | | |
| A-Z | | Use the up and down arrows to select the required letter, press enter to accept and move on to the next letter. |

| MISC. | > | SET TIME |
|---|---|---|
| Description:<br>Used to set the real time clock. If the Online Data logging feature is being used, the time will automatically sync to the server clock.<br>Note: This can only be set when the restrike timer is not running | | |
| TIME=24:00:00 | | Use the up and down arrows to select the required number, press enter to accept and move on to the next character.<br>The clock is a 24 hour clock and can be altered depending on time zone. |

| MISC. | > | SET DATE |
|---|---|---|
| Description:<br>Used to set the Time and Date and can be altered depending on the time zone. If the Online Data logging feature is being used, the time will automatically sync to the server date.<br>Note: This can only be set when the restrike timer is not running | | |
| DATE=30/12/2015 | | Use the up and down arrows to select the required number, press enter to accept and move on to the next character.<br>The date is of the format: DD/MM/YYYY |

| MISC. | > | RE-SET DEFAULTS? |
|---|---|---|
| Description:<br>Resets the system to the factory defaults. | | |
| Selectable Values | * | NO |
| | | YES |

## Integration

This section details how the Spectra control system can be integrated with other equipment on site to provide flexible and reliable operation. For all connections coming in or out of the panel from any equipment, feed-through terminals are provided and located next to the I/O cable entry.

### Analogue Inputs

Spectra has one Selectable Analogue Input which operate on a 4-20mA input signal (AI1). This increases to 2 if an additional I/O module is installed:

| Analogue Input | Description | Connection Details |
|---|---|---|
| **UVT** | This option is available if there is a Transmittance meter being used. The UV Transmissivity determines how well the UVC light will penetrate the water being treated. The higher the UVT, the more effective the UVC is for the deactivation of pathogens. By connecting a 4-20mA UVT input, the Spectra is able to display the UVT of the water being treated that is being passed through the chamber.<br>**Note:** This reading is for information only and has no impact on the operation of the system | 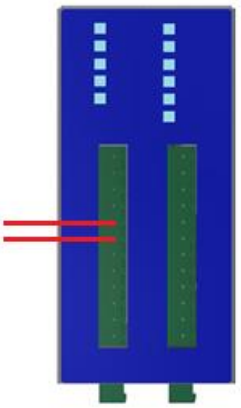 |
| **Flow Meter** | Flow plays a vital role in determining the UV Dose. If the water being treated passing through the chamber varies in flow, the calculated UV Dose will also be affected. By connecting a 4-20mA flow meter, the Spectra is able to determine a more accurate UV dose reading. The **FLOW SOURCE** set to 'Analogue' and the **FLOW METER MAX** inputted on the Spectra. | |

### Analogue Outputs

Spectra has 1 Selectable Analogue Output which operate on a 4-20mA input signal (AI1). This increases to 2 if an additional I/O module is installed:

| Analogue Output | Description | Connection Details |
|---|---|---|
| **Dose** | Spectra has one selectable active analogue outputs (**DOSE & INTENSITY**) which operate on a 4-20mA output signal. One of these signals can be outputted from both AO1 on the on the ATUV-1220 and requires scaling by setting a maximum value at 20mA which is done using the **ANALOGUE OUTOUT 1 MAX** variable. If these outputs are selected, they will replicate the Spectra figures in a 4-20mA signal. | 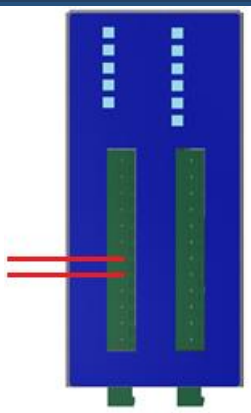 |
| **Intensity** | | |

## Digital Inputs

Spectra has 3 Selectable Digital Inputs DI1, DI2 & DI3. This increases to 6 if an additional I/O module is installed:

| Digital Input | Description | Connection Details |
|---|---|---|
| **Remote Start/Stop** | DI1 on the ATUV-1220 enables the remote Start / Stop action which allows remote volt-free contacts to mimic the action of the normal front panel **START** and **STOP** pushbuttons. If the system is set to remote and the volt free contact is closed the UV system will be permitted to run and continue to run if the signal is still present. If the external signal is removed the UV lamp will be stopped (if running). The system cannot be started using the Touch whilst in remote but can be stopped. By stopping the system locally whilst in remote will cause a critical fault (Local Stop Fault) which will need to be locally reset. | 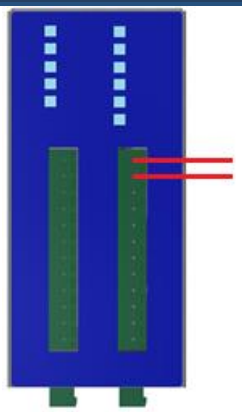 |
| **External Low Power Switching** | The Low Power Switching primary function is to force the system into low power (50% lamp power output), consequently affecting the dose.<br><br>**Dose Reduction**<br>To avoid the system tripping on Low UV Dose, the **LOW POWER S-P** variable is used to scale the Dose Alarm and Fault levels accordingly if **DOSE REDUCTION MODE** has been selected.<br><br>**Flow Reduction**<br>The function of the **FLOW REDUCTION MODE** is to reduce the flow rate accordingly, again using the **LOW POWER S-P** variable. This is particularly useful if a Flow meter is not being used and there is a fixed reduction in flow (e.g. pump turning off). The system will scale down the **FLOW RATE** so that it is equivalent to the new reduced flow rate.<br>If the **LOW POWER S-P** has been set to 0% whilst in **FLOW REDUCTION MODE**, the flow rate will reduce to 0.01 to purposely increase the Dose to reduce the chances of Low Dose Alarms/Faults from occurring. These functions are also useful if filters are used and a backwash/bump cycle is being carried out in a process, or there is reduced/no flow and the system is to remain running. By forcing the system to the lowest power, the chances of the system tripping on High Temperature will reduce. | 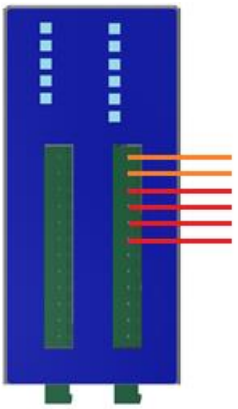<br>*DI1 set to Remote Start/Stop as default on I/O Module #1; Selectable on I/O Module #2 (if fitted). |
| **Boost** | The Boost function is used to force the system to full power (100% lamp power output) and can be used in conjunction with chlorine controllers. If combined Chloramines are high (if present), and the chlorine controller alarm is triggered, this will activate the Boost function. By increasing the lamp output, an increase in intensity will result that will help to break down the bonds.<br>**Note:** If both Boost and External Low Power Switch are energised, Low Power will always take priority. | |

| Digital Input | Description | Connection Details |
|---|---|---|
| **Process Interlock** | The Process Interlock opto-isolated input enables an external device (switch, pump, etc.), to stop the running of the UV lamp/s. If the volt free contact is closed the UV system will be permitted to run.<br><br>**Process Interlock Action**<br>The Process Interlock Action describes HOW the system wants to respond when the signal has been lost:<br>• If **PROCESS INTERLOCK - INTERUPT** has been set and the external signal is lost, the UV lamp will be stopped (if running) causing a Non-Critical Alarm to appear on the spectra (Process Interlock Interrupt) and not allowed to start again until the PI signal is regained and the restrike time has elapsed Note: if Remote is enabled, the remote signal will also have to be present for the system to re-start<br>• If **PROCESS INTERLOCK - SHUTDOWN** has been set and the external signal is lost, the UV lamp will be stopped (if running) causing a Critical Fault (Process Interlock Shutdown) to appear on the Spectra and not allowed to start again until the Critical Fault has been reset locally.<br><br>**Process Interlock Mode**<br>The Process Interlock Mode describes WHEN the system responds to the signal loss:<br><br>• If the Process Interlock Mode is set to **NONE**, this function is disabled<br>• If the Process Interlock is set to **FULL**, the system will stop the UV lamp/s from running if the system is in start-up or running mode<br>• If the Process Interlock is set to **RUNNING**, the system will only stop the UV lamp/s from running if the system is in running and ignores if the signal has been lost if the system is in start-up. | 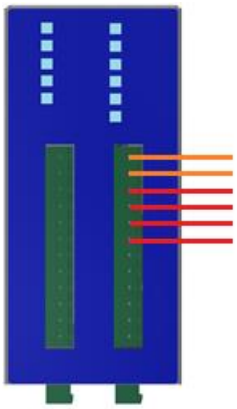<br>*DI1 set to Remote Start/Stop as default on I/O Module #1; Selectable on I/O Module #2 (if fitted). |

## Digital Outputs

Spectra has 2 Selectable Digital Outputs. This increases to 5 if an additional I/O module is installed:

| Digital Output | Description | Connection Details |
|---|---|---|
| **Open Valve** | Spectra can signal the opening & closing of valves if being used in conjunction with the UV system. When the system enters **RUNNING** mode, this output will energise causing the valve to open (operated by motor, air actuated, etc.), in turn causing the valve to close when the signal has been lost. | 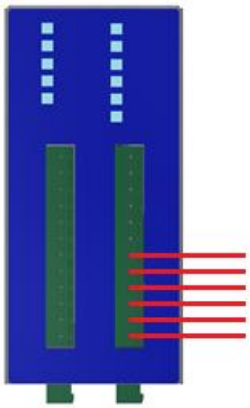 |
| **Bleed Valve** | A bleed on relay can be used in conjunction with one of the Spectra Selectable Digital Outputs.<br>If the **SELECTABLE DIGITAL OUTPUT** is set to **TEMPERATURE ALARM**, and the chamber temperature exceeds its Alarm Set-point value, it will cause the Digital Output to energise. If connected, this will be able to signal a bleed valve to open, either allowing air trapped in the chamber to escape or to allow flow to pass through the chamber, consequently reducing the temperature without reaching the shutdown temperature (**FAULT TEMP**). This Digital Output will de-energise when the chamber temperature falls below a value of 5˚C/F, thus closing the bleed valve. | |
| **Critical / Non-Critical Healthy** | Both of these Digital Output signals indicate if a Critical Fault or Non-Critical Alarm has been experienced. The Digital Output energises when the Fault / Alarm has occurred. | |
| **Running** | This Digital Output signal provides an indication that the system is running. This output energises as soon as the lamp/s strike or are running. | |
| **Dose Healthy** | This Digital Output signal provides an indication that the Dose is Healthy and will energise when the Dose is above the **DOSE ALARM LEVEL** for **GOOD DOSE TIME**. | |

# MODBUS Communication

## Introduction

The Spectra UV disinfection system has built in Modbus RTU for control and monitoring of the systems performance parameters.

This document is aimed at end users and system integrators of the Spectra UV disinfection system and covers the following:

- Modbus implementation
- Modbus maintenance
- Modbus debugging

## Supported Interface

Spectra works as a slave device and is implemented in accordance with the EIA/TIA-485 (RS-485) standard, supporting the following:

- 2 or 4 wire interface
- Odd, even and no parity
- Baud rates 9600 to 115200
- One or two stop bits

## Physical Connection

### Cable Connection

Connection to the Spectra is via the Modbus Slave port on the ATUV-1010 motherboard.



An RJ45 connection is required with the following pin out:

| Modbus Slave Pin out | | |
|---|---|---|
| 1 | Rx+ | Receive positive |
| 2 | Rx- | Receive negative |
| 3 | | |
| 4 | Tx- | Transmit negative |
| 5 | Tx+ | Transmit positive |
| 6 | | |
| 7 | | |
| 8 | Ground | Reference ground |

## 2 / 4 wire selection

Both 2 and 4 wire interfaces are supported, this is selected using a 4 way header on the ATUV-1010. No jumpers indicate 4 wire interface, for 2 wire interface 2 jumpers should be fitted.

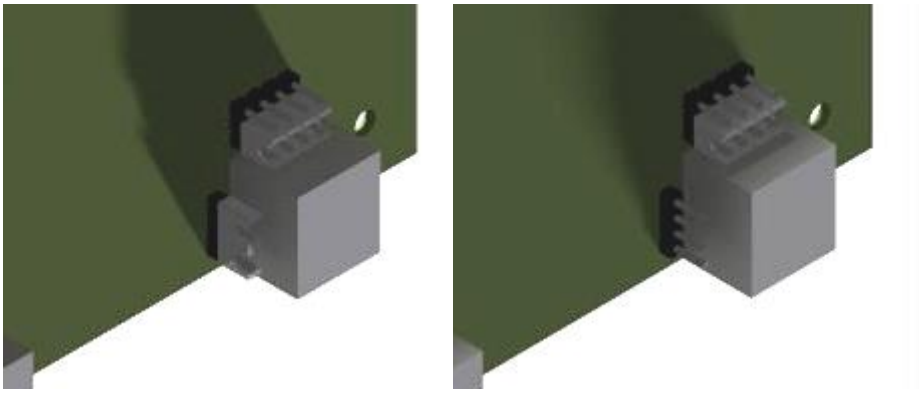

ATUV-1010 with (left) and without jumpers (right)

## Data Transmission

The following parameters are set from the config.xml on the SD card and are found in the ModbusSlave directory.

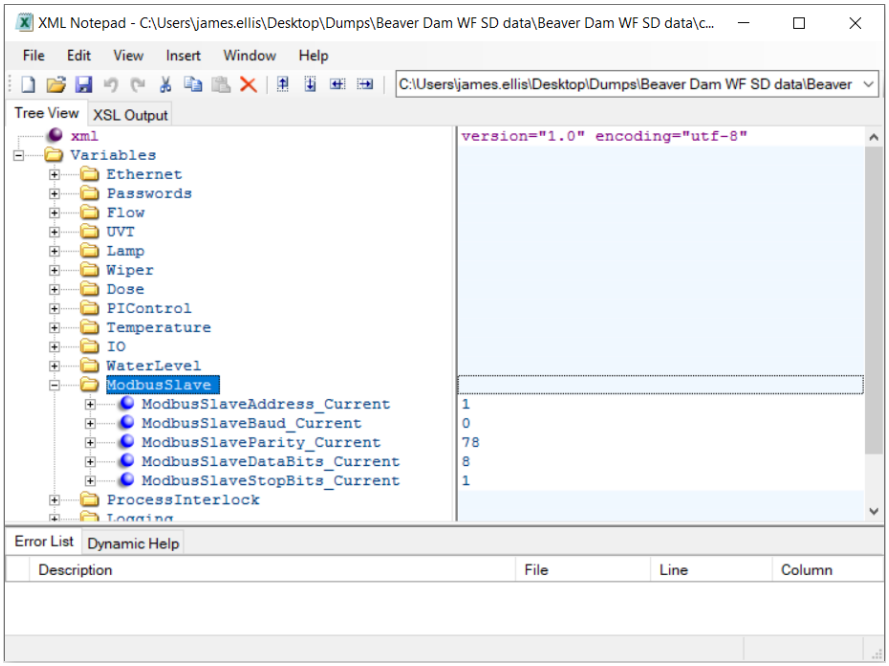


### Slave Address

| ModbusSlaveAddress_Current | |
|---|---|
| Description:<br>Used to set this slave address of the Spectra unit. | |
| Selectable Values | 1 - 99 |

### Data Bits

| ModbusSlaveDataBits_Current | |
|---|---|
| Description:<br>Used to select the number of data bits in the Modbus frame. | |
| Selectable Values | 7 |
| | 8 |

### Stop Bits

| ModbusSlaveStopBits_Current | | |
|---|---|---|
| Description:<br>Used to select the number of stop bits in the Modbus frame. | | |
| Selectable Values | 1 | |
| | 2 | |

### Parity

| ModbusSlaveParity_Current | | |
|---|---|---|
| Description:<br>Used to select the parity checking of the Modbus frame. | | |
| Selectable Values | N (78) | None |
| | E (69) | Even |
| | O (79) | Odd |

### Baud Rate

| ModbusSlaveBaud_Current | | |
|---|---|---|
| Description:<br>Used to select the transmission baud rate. | | |
| Selectable Values | 0 | 115200 |
| | 1 | 57600 |
| | 2 | 38400 |
| | 3 | 19200 |
| | 4 | 9600 |

## Message Structure

### General Structure

Modbus frames are structured in the following format:

| Address | Function Code | Data | CRC |
|---|---|---|---|
| 8 bits | 8 bits | N x 8 Bits | 16 bits |

| Address |
|---|
| Description:<br>Single byte used to identify the slave address |

| Function Code | |
|---|---|
| Description:<br>Consists of a single byte and is used to tell the address slave what action to perform, the following function codes are supported: | |
| 0x03 | Read Holding Registers |
| 0x04 | Read Input Register |
| 0x06 | Write Single Register |
| 0x10 | Write Multiple Registers |

| Data |
|---|
| Description:<br>Multiple bytes containing the actual data |

| CRC |
|---|
| Description:<br>Consists of 2 bytes which are a result of a cyclic redundancy check calculation performed on the message content. |

### Read Data

Function code 0x03 and 0x04 requests from the mater should be structured in the following format:

| Address | Function Code | Data | | CRC |
|---|---|---|---|---|
| | | Register Start Address | Number of Registers | |
| 8 bits | 0x03 or 0x04 | 16 Bits | 16 Bits | 16 bits |

The Spectra will reply to a successful read request in the following format:

| Address | Function Code | Byte Count | Data | CRC |
|---|---|---|---|---|
| 8 bits | 0x03 or 0x04 | 8 bits | N x 8 bits | 16 bits |

### Write Data

#### Write Single Register

Function code 0x06 frames from the master should be structured in the following format:

| Address | Function Code | Data | | CRC |
|---|---|---|---|---|
| | | Register Address | Data | |
| 8 bits | 0x06 | 16 bits | 16 bits | 16 bits |

The Spectra will reply to a successful write by sending an echo of the request.

#### Write Multiple Registers

Function code 0x10 frames from the master should be structured in the following format:

| Address | Function Code | Data | | | | CRC |
|---|---|---|---|---|---|---|
| | | Register Start Address | Number of registers | Byte Count | Data | |
| 8 bits | 0x10 | 16 bits | 16 bits | 8 bits | N x 8 bits | 16 bits |

The Spectra will reply to a successful write by sending an echo of the request.

## Data Storage

The data stored in the Spectra is arranged as a database, which is accessed for read or write using 16-bit words arranged to give access to control, status and configuration data.

Each parameter has an associated Read / Write attribute associated with it. A byte written to a read only address will be ignored with no exception generated. Similarly a byte read from a write only address will return 0 with no exception generated.

Writing to an undefined address within the allowable data range is ignored; similarly reading an undefined address will return 0. Again no exception will be generated.

Attempting to write or read data from an area outside the allowable data range will result in the transmission of an exception message.

Changes to data written from the master are actions immediately upon receipt.

## Full Register Map

| Address | Description | Units (Default) | Type | Read / Write |
|---|---|---|---|---|
| 46000 | Flow Rate | m3/hr (x10) | uint_16 | Read |
| 46001 | Chamber Temperature | °C (x10) | uint_16 | Read |
| 46002 | UV Dose | mJ/cm2 (x10) | uint_16 | Read |
| 46003 | Average UV Intensity | mW/cm2 (x10) | uint_16 | Read |
| 46004 | Average Lamp Power | Watts | uint_16 | Read |
| 46005 | System UVT | % (x10) | uint_16 | Read |
| 46006 | System Power Level | % (x10) | uint_16 | Read |
| 46007 | Rolling Watchdog | (x1) | uint_16 | Read |
| 46008 | System Status | (See example) | uint_16 | Read |
| 46009 | Fatal Alarms | (See example) | uint_16 | Read |
| 46010 | Critical Alarms | (See example) | uint_16 | Read |
| 46011 | Non-Critical Alarms | (See example) | uint_16 | Read |
| 46012 | System Hours | Hours (÷ 24) | uint_16 | Read |
| 46013 | Dose Set-point | mJ/cm2 (x 10) | uint_16 | Read |
| | | | | |
| 46020 | System Control | (See example) | uint_16 | Read / Write |
| 46021 | Comms Flow Rate | m3/hr | uint_16 | Read / Write |
| 46022 | Comms UVT | % (x10) | uint_16 | Read / Write |
| 46023 | Power Control mode | (See example) | uint_16 | Read / Write |
| 46024 | Reset Alarms | 0 – No reset<br>1 – Reset Alarms | uint_16 | Read / Write |
| 46025 | Force Wiper Run | 0 – No Run<br>1 – Force Run | uint_16 | Read / Write |

| Address | Description | Units (Default) | Type | Read / Write |
|---|---|---|---|---|
| 46030 | Lamps in use (1-4) | Bit map (See Example) | uint_16 | Read |
| | | | | |
| 46034 | Sensor in use (1-10) | Bit map (See Example) | uint_16 | Read |
| 46035 | System Control Mode | 0 – Local<br>1 – Remote<br>2 - Comms | uint_16 | Read |
| 46036 | Flow Source | 0 – Fixed<br>1 – Comms<br>2 – Analogue | uint_16 | Read |
| | | | | |
| 46037 | Dose Units | 0 – mJ/cm2<br>1 – J/m2<br>2 – J/cm2 | uint_16 | Read |
| 46038 | Flow Units | 0 – m3/hr<br>1 – BPM<br>2 – l/s<br>3 – Ml/d<br>4 – GPM<br>5 - MGD | uint_16 | Read |
| 46039 | Intensity Units | 0 – mW/cm2<br>1 – W/m2 | | |
| 46040 | Temperature Units | 0 - °C<br>1 - °F | uint_16 | Read |
| 46041 | Lamp Life | Hours | uint_16 | Read |
| 46042 | Restrike time | Minutes | uint_16 | Read |
| 46043 | Low Dose Time | Seconds | uint_16 | Read |
| 46044 | Fixed Flow Rate | m3/hr | uint_16 | Read |
| 46045 | Flow meter Max | m3/hr | uint_16 | Read |
| | | | | |
| 46048 | Dose Alarm Level | mJ/cm2 | uint_16 | Read |
| 46049 | Dose Fault Level | mJ/cm2 | uint_16 | Read |
| 46050 | Fault Temperature | °C | uint_16 | Read |
| 46051 | Alarm Temperature | °C | uint_16 | Read |
| 46052 | Power Level | % | uint_16 | Read |
| 46053 | Auto Restart | | uint_16 | Read |
| | | | | |
| 46055 | Water Level Low Delay | Seconds | uint_16 | Read |
| 46056 | Restrike Countdown Timer | Seconds (counts down upon lamp(s) extinguishing) | uint_16 | Read |

| Address | Description | Units (Default) | Type | Read / Write |
|---|---|---|---|---|
| 47000 – 47003 | Lamp 1 Power - Lamp 4 Power | Watts | uint_16 | |
| | | | | |
| 47020 – 47023 | Lamp 1 Voltage - Lamp 4 Voltage | Volts | uint_16 | |
| | | | | |
| 47040 – 47043 | Lamp 1 Current - Lamp 4 Current | mA | uint_16 | |
| | | | | |
| 47100 - 47109 | UV Intensity 1 - UV Intensity 10 | mW/cm2 (x100) | uint_16 | |
| | | | | |
| 47200 – 47203 | Lamp 1 Hours to Lamp 4 Hours | Hours | uint_16 | |
| | | | | |
| 47300-47303 | Lamp 1 Strikes – Lamp 4 Strikes | | uint_16 | |
| | | | | |
| 50454 & 50455 | Log Inactivation | | Float | Read |
| | | | | |
| 48000 to 48003 | Lamp 1 Status - Lamp 4 Status | (See example) | uint_16 | Read |

### Resister Examples

| System Control | |
|---|---|
| Description:<br>Start, Stops & Resets faults present on the system.<br>Note: Spectra requires to be set to Remote to start/stop the system via Comms. | |
| Address | 46020 |
| Type | uint_16 |
| Read / Write | Read / Write |
| Example | 0 - Stop<br>1 - Start |

| Power Control Mode | |
|---|---|
| Description:<br>Selects the power level of the system. | |
| Address | 46023 |
| Type | uint_16 |
| Read / Write | Read / Write |
| Example | 0 – Full<br>1 - Variable<br>2 – Low |

| Lamps in use | |
|---|---|
| Description:<br>Indicates the number and order of lamps enabled. | |
| Address | 46030 |
| Units | Y / N |
| Type | uint_16 |
| Read / Write | Read only |
| Example | Value of 5 would indicate that lamps 1 and 3 are enabled.<br>(YNYN NNNN NNNN NNNN / 1010 0000 0000 0000) |

| UV Sensors in use | |
|---|---|
| Description:<br>Indicates the number and order of UV sensors enabled. | |
| Address | 46034 |
| Units | Y / N |
| Type | uint_16 |
| Read / Write | Read only |
| Example | Value of 3 would indicate that sensors 1 and 2 are enabled.<br>(YYNN NNNN NNNN NNNN / 1100 0000 0000 0000) |

| Fatal Alarms | |
|---|---|
| Description:<br>Displays the status of the fatal alarms | |
| Address | 46009 |
| Type | uint_16 |
| Read / Write | Read only |
| Example | 0 – No fatal alarms<br>1 – I/O Module Communications Watchdog<br>2 – Electronic Ballast Communications Watchdog<br>4 – Local Stop Fault |

| Critical Alarms | |
|---|---|
| Description:<br>Displays the status of the critical alarms | |
| Address | 46010 |
| Type | uint_16 |
| Read / Write | Read only |
| Example | 0 – No critical alarms<br>1 - I/O modules less than expected<br>2 - Electronic Ballasts Less than expected<br>4 – I/O Module not calibrated<br>8 - SD Card not found<br>16 - Ballast/Lamp fault<br>32 - Chamber temperature fault<br>64 – Control Panel over temperature<br>128 – Low UV dose fault<br>256 – Water Level Low<br>512 – Process Interlock shutdown<br>1024 – Flow Meter Out of Range |

| Non-Critical Alarms | |
|---|---|
| Description:<br>Displays the status of the non-critical alarms | |
| Address | 46011 |
| Type | uint_16 |
| Read / Write | Read only |
| Example | 0 – No non-critical alarms<br>1 – Process interlock interrupt<br>2 – Low UV dose alarm<br>4 – Wiper Alarm<br>8 – Lamp Approaching end of life<br>16 – Chamber temperature alarm<br>32 – Power Loss When Running |

| System Status | |
|---|---|
| Description:<br>Displays the overall status of the system. | |
| Address | 46008 |
| Type | uint_16 |
| Read / Write | Read only |
| Example | 0 – Normal Stop<br>1 – Running<br>2 – Starting Up<br>4 – Fatal Fault<br>8 – Critical Fault<br>16 – Non-Critical Alarm<br>32 – Stopped Restrike, Stopped Non-Critical, Stopped Critical, Stopped Fatal, Stopped Process Interlock |

| Lamp # Status | |
|---|---|
| Description:<br>Displays status of the requested lamp | |
| Address | 48000 to 48003 (lamp 1 to 4) |
| Type | uint_16 |
| Read / Write | Read only |
| Example | 1 – Lamp Off<br>2 – Lamp Igniting<br>4 – Lamp Warming<br>8 – Lamp Running<br>16 - Lamp Open Circuit<br>32 - Lamp Short Circuit<br>64 – Lamp/Wiring<br>128 - Lamp Earth Leakage<br>256 – Lamp End of Life<br>512 - Ballast Supply<br>1024 - Ballast Temperature<br>2048 - Ballast Fan<br>4096 - Ballast Internal<br>8192 - Ballast Communications |

## Trouble Shooting

Should a fault occur, please see below for troubleshooting guide.

**NOTE:** Should more than one fault occur, the fault screen with the highest priority will be displayed. Pressing DOWN on the keypad accesses the lower priority screens. Once the cause of the alarm or fault has been rectified, pressing the reset button on the front membrane will reset the alarm.

### System does not operate

| Message | |
|---|---|
| No Message | |
| **Possible Cause** | **Possible Solutions** |
| Main Power Source is OFF | Ensure there is power to the system |
| Isolator is in the OFF Position | Ensure both the Isolator and all MCB's are turned ON. |
| Incorrect Supply Voltage | Ensure the correct voltage is being supplied to the system |
| Faulty 24VDC Power supply | Ensure the 24VDC power supply LED is energized (healthy), and 24VDC +/- 1V is being measured from the output |
| Isolator Fuse has blown (If fitted) | Check Isolator fuse before replacing. |
| Control Transformer is Faulty (if fitted) | Check that 230V AC appears between terminals L & N on the 24VDC power supply |

### No CRC Was Found

| Message | |
|---|---|
| No Kernel CRC Found | |
| **Reasons** | **Possible Solutions** |
| SD card not inserted upon power on | Ensure the SD card is inserted correctly |
| The Spectra2.afx.S19 file is missing from the SD card | Ensure the Spectra2.afx. file is located in the root of the SD card |

### Ballast/Lamp Fault

**Lamp Open Circuit**

| Message | | |
|---|---|---|
| Lamp Open Circuit | | |
| **Reason** | **Possible Causes** | **Possible Solutions** |
| Lamp driver is measuring an open circuit to the lamp | Defective lamp | Replace Lamp |
| | Lamp Connector not installed | Ensure the lamp connector is properly installed/secured |
| | Wiring to the lamp is incorrect/damaged | Ensure there is no open circuit to the lamp. Check internal wiring from lamp driver to the lamp |

**Lamp Short Circuit**

| Message | | |
|---|---|---|
| Lamp Short Circuit | | |
| **Reason** | **Possible Causes** | **Possible Solutions** |
| Lamp driver detected a short circuit/low resistance | Moisture has entered inside the quartz | Check the seals are not allowing liquid inside the quartz. Also check that the quartz hasn't broke or cracked. |
| | Wiring to the lamp is incorrect/damaged | Ensure there is no short circuit to the lamp. Check internal wiring from lamp driver to the lamp |

**Lamp/Wiring**

| Message | | |
|---|---|---|
| Lamp 5 Min below 85% Power | | |
| **Reason** | **Possible Causes** | **Possible Solutions** |
| Lamp running outside correct operating conditions or lamp side circuit wiring error | Incorrect Lamp Installed | Ensure the correct lamp has been installed in the chamber |
| | Insufficient Cooling of Lamp and lamp is running to hot | Check Fluid is flowing through the system at a reasonable flow. |
| | Moisture has entered inside the quartz | Check the seals are not allowing liquid inside the quartz. Also check that the quartz hasn't broke or cracked. |
| | Incorrect Lamp Power variable has been entered | Ensure the Lamp Power variable is correct as per the Lamp being used |

**Lamp Earth Leakage**

| Message | | |
|---|---|---|
| Lamp Earth Leakage | | |
| **Reason** | **Possible Causes** | **Possible Solutions** |
| Current has been detected through Earth | Moisture has entered inside the quartz | Check the seals are not allowing liquid inside the quartz. Also check that the quartz hasn't broke or cracked. |
| | Faulty Lamp | Check for visible damage to UV lamp (e.g. cracks in lamp) |

**Ballast Supply**

| Message | | |
|---|---|---|
| Ballast Supply | | |
| **Reason** | **Possible Causes** | **Possible Solutions** |
| Power Supply to ballast outside required operating conditions | Voltage/Frequency supply to the lamp driver is too low/high | Check the Panel Inlet Fan Filter is not blocked |

**Ballast Temperature**

| Message | | |
|---|---|---|
| Ballast Temperature | | |
| **Reason** | **Possible Causes** | **Possible Solutions** |
| Lamp diver air temperature too high | No air circulation inside panel | Check the Panel Inlet Fan Filter is not blocked |
| | Faulty Fan | Check the Panel Inlet Fan rotates when DO1 on the ATUV-1220 is energized. Check for any loose or damaged connections |
| | High ambient temperature | Ensure the ambient temperature is not higher than allowed operating temperature |

**Ballast Fan**

| Message | | |
|---|---|---|
| Ballast Fan | | |
| **Reason** | **Possible Causes** | **Possible Solutions** |
| Lamp driver fan fault or incorrect RPM | Lamp Driver Fan stopped rotating | Ensure Lamp Driver fan rotates when lamp is running |
| | Lamp Driver Fan rotating at lower RPM | Ensure there are no obstacles restricting Lamp Driver Fan rotating |
| | | Replace Lamp Driver |

**Ballast Internal**

| Message | |
|---|---|
| Ballast Internal | |
| **Reason** | **Possible Solutions** |
| Ballast has experienced an internal fault | Ensure all other Lamp faults are reset |

### Low Dose

| Message | | |
|---|---|---|
| Low Dose Alarm Or Low Dose Fault | | |
| Reason | Possible Causes | Possible Solutions |
| **Dose Drops below Alarm Level/Fault Set-points** | Fouling/deposits blocking UV light to the Sensor | Check the Quartz window for deposits on the inside or outside. Any coating can reduce the amount of UV light passing through to the UV Sensor. The amount of UV Light that will pass through the Quartz decreases as it ages and should be changed approximately every 18 months. |
| | | Check for fingerprints on both the Quartz & UV Lamp. If the Quartz & UV Lamp are handled without gloves, the grease/fatty deposits from the skin can etch themselves onto the surfaces once the lamp is struck. |
| | UV Transmittance (UVT) of the water has decreased | Ensure water quality is within specification for the UV system installed |
| | Aging of the Lamp | Check the UV Lamp run time and replace lamp if necessary. UV Intensity decreases as the lamp ages. |
| | An increase in flow (if flow meter is fitted) | Check the Flow Rate flowing through the system. If a flow meter is enabled, an increase in flow will decrease the Dose. Also check the FLOW METER MAX variable is not set higher than the maximum flow the chamber will experience. |
| | Dose Alarm/Fault levels are set too high | Check that DOSE ALARM LEVEL and DOSE FAULT LEVEL are set to the correct values. |
| | UV Probe is not properly connected | Check there is a sensible value displayed on the screen. With the system stopped 4mA should be displayed. The UV1/2 LED on the ATUV-1220 should also be illuminated (indicating a healthy signal) |
| | As the wiper (if fitted) sweeps across the quartz, the UV intensity may dip long enough for it too cause an alarm. | Check the LOW DOSE TIME value is correct. Force the wiper to carry out a sweep of the quartz to see if it affects the Dose long enough to generate a fault/alarm. |
| | Air trapped between the sensor and lamp/s | Ensure any air trapped in the chamber is remove as air trapped within the system will not allow UV Light to pass through correctly. |
| | Possibility of a Faulty probe | Check for visible damage to the probe & probe cable |

### Control Panel Over-Temperature

| Message | | |
|---|---|---|
| Control Panel Over Temperature | | |
| Reason | Possible Cause | Possible Solutions |
| **The temperature inside panel has exceeded the thermostat cut-out temperature** | No air circulation inside panel | Ensure fan filter is not blocked |
| | Faulty Fan | Check Fan rotates when DO1 on the ATUV-1220 is energised. Check for any loose or damaged connections |
| | High ambient temperature | Ensure the ambient temperature is not higher than allowed operating temperature |

### Chamber Over-Temperature

| Message | | |
|---|---|---|
| Chamber Over-Temperature Alarm Or Chamber Over-Temperature Fault | | |
| **Reason** | **Possible Causes** | **Possible Solutions** |
| **Chamber temperature reading has exceeded temperature Alarm set-point**<br><br>**Or**<br><br>**Chamber temperature reading has exceeded temperature Fault set-point** | Very slow or static flow through chamber | Check Fluid is flowing through the system at a reasonable flow. |
| | | Check Manual/Auto Valves are Open |
| | Temperature Fault/Alarm levels set too low for application | Check the initial temperature of fluid flowing through the system |
| | | Check the Fault/Alarm Set-Points are set to the correct/reasonable value |
| | Faulty Connection | Check for visible damage to the temperature probe & probe cable. Check the resistance across the red/blue and green wires to the temperature sensor (see below for resistance values). |
| | | Check there is a sensible value displayed on the screen and the TEMP LED on the ATUV-1220 is illuminated (indicating a closed signal) |

### Power Loss While Running

| Message | |
|---|---|
| Power Loss While Running | |
| Reason | Possible Solutions |
| The system was running upon power failure or was turned off. | Check for power failure to the UV System |
| | Check the power supply for any dips/surges in voltage |

### Lamp Approaching End of Life

| Message | |
|---|---|
| Lamp Approaching End of Life | |
| **Reason** | **Possible Solutions** |
| The lamp life timer has exceeded the recommended run hours | The system has a timer that counts how long the lamp has been running. Once this time is exceeded the UV Lamp should be changed & the Lamp Run hours reset. |

### Resetting Lamp hours

To Reset the Lamp hours after a Lamp change:
Enter the Operator Menus (Refer to the Set-up Screen Menus – Operator Menus) and scroll down to the LAMP MENU screen and press enter.

- To **Reset hours on all Lamps**, select **RESET ALL LAMPS** by pressing enter on the menu and confirm with Yes.
- To **Reset Individual Lamp hours**, select **RESET INDIVIDUAL LAMP HOURS** and **RESET LAMP # HOURS** will appear. Scroll up/down to select the desired Lamp and press enter to select Yes to reset the hours for that particular lamp.

### Local Stop Fault

| Message | |
|---|---|
| Local Stop Fault | |
| **Reason** | **Possible Solutions** |
| **System has been stopped from the Spectra while in remote** | If the system is running in remote, pressing the Stop button on the Spectra will still stop the system creating a Fatal Fault.<br>This cannot be reset over the Modbus communications network.<br>Pressing the Reset button on the Spectra will restart the system if the remote run signal is still present & the re-strike timer has elapsed. |

### Process Interlock

| Message | |
|---|---|
| Process Interlock Interrupt Or Process Interlock Shut-down | |
| Reason | Possible Solutions |
| **Process Interlock signal (DI1/DI2/DI3 on ATUV-1220) has been lost while running/start-up** | Check signal from the Process Interlock device.<br>e.g. Pump is running – Flow Switch has operated etc. |
| | Check DI8 on the ATUV-1220 is energising when the signal from the Process Interlock is active |
| | Check Process Interlock Delay time is set to an appropriate time. |
| | Check for visible damage to signal cables |

### Wiper Fault

| Message | |
|---|---|
| Wiper Fault | |
| **Reason** | **Possible Solutions** |
| **Automatic mechanical wiper has failed to perform sweep** | Refer to Automatic Wiper Section of the Manual for Fault Diagnostics. |

### I/O Communications Watchdog

| Message | |
|---|---|
| I/O Module Watchdog Error | |
| **Reason** | **Possible Solutions** |
| **Communication to the ATUV-1220 has been lost** | Check ethernet connections from the spectra to the ATUV-1220 and the AO1 is illuminated |
| | Ensure there is power to the module. |

### Electronic Ballast Communications Watchdog

| Message | |
|---|---|
| Electronic Ballast Watchdog Error | |
| **Reason** | **Possible Solutions** |
| **Communications with the Ballast have failed – Yellow LED on Ballast is not blinking** | Check ethernet connections from the spectra components to Electronic Ballast |
| | Ensure there is power to Ballast – green LED on Ballast |
| | Ensure the correct number of ballasts have been selected (‘Lamps in Use’ parameter) |

### Water Level Low

| Message | | |
|---|---|---|
| Water Level Low | | |
| **Reason** | **Possible Causes** | **Possible Solutions** |
| **Water Level signal (DI1/DI2/DI3 on the ATUV-1220) has been lost** | Water level has dropped below required level | Ensure water level is above conductivity probe |
| | Faulty connection | Check all cable connections and ensure DI1/DI2/DI3 is illuminated indicating water level is above conductivity probe |

### I/O Modules Less Than Expected

| Message | |
|---|---|
| I/O Modules Less Than Expected | |
| **Reason** | **Possible Solutions** |
| **The Number of I/O's enabled on the spectra has exceeded the actual amount of lamps modules being used** | Check the ATUV-1220 address' correspond to the Number of I/O's enabled on the Spectra (Please refer to the Spectra Operations & Maintenance manual for details) |
| | Check Ethernet connections between Spectra & ATUV-1220 |

### Electronic Ballasts Less Than Expected

| Message | |
|---|---|
| Electronic Ballasts Less Than Expected | |
| **Reason** | **Possible Solutions** |
| **The Number of Electronic Ballasts enabled on the spectra has exceeded the actual amount of ballasts being used** | Check the Electronic Ballasts address' correspond to the Number of Ballasts enabled on the Spectra (Please refer to the Spectra Operations & Maintenance manual for details) |
| | Check Ethernet connections between Spectra & Electronic Ballast |

### Flow Meter Out of Range

| Message | | |
|---|---|---|
| Flow Meter Out of Range | | |
| **Reason** | **Possible Causes** | **Possible Solutions** |
| **The flow meter input (AI1 on the ATUV-1220) is outside the 4mA and 20mA tolerances** | Faulty signal | Ensure the signal from the device to the Spectra is within 4 & 20 mA. |
| | Faulty connection | Check all cable connections and ensure AI1 LED is illuminated indicating a signal above 3.5 mA. |



**For further support, please contact your local authorised service provider. Alternatively, contact our UK head office:**

## FOR GENUINE SPARE PARTS:

E: spares.atg@evoqua.com | T: +44 (0)1942 216161 – Opt 1

## TO ARRANGE A SERVICE OR COMMISSION:

E: service.atg@evoqua.com | T: +44 (0)1942 216161 – Opt 1

## FOR ANY OTHER ENQUIRIES:

E: info.atg@evoqua.com | T: +44 (0)1942 216161


## EVOQUA WATER TECHNOLOGIES LTD

Genesis House
Richmond Hill
Wigan
WN5 8AA
United Kingdom

**www.evoqua.com | www.atguv.com**


EVOQUA
WATER TECHNOLOGIES