LOWARA
xylem

Technical brochure
Cod. 191003921 Rev. J Ed.11/2025

50 Hz



e-HM Series

Threaded horizontal multistage centrifugal electric pumps

ErP 2009/125/EC

xylem

Directive 2009/125/EC of the European Union

The **Directive 2005/32/EC** on energy-using products (**EuP**) and the subsequent **Directive 2009/125/EC** on energy-related products (**ErP**) established the ecodesign requirements for products to reduce their energy consumption and consequently their environmental impact.

These requirements apply to products placed and used in the European Economic Area (European Union plus Iceland, Liechtenstein and Norway) as a stand-alone unit or as integrated parts in other products.

The following tables show the Regulations that define the requirements applicable to Lowara products.

- Some types of **pump**, used for pumping clean water:

Regulations	From	Target
(EU) N. 547/2012 and subsequent updates	1 January 2015	**MEI** ≥ 0,4

- **Circulators** with a rated hydraulic output power of between 1 and 2500 W, designed for use in heating systems or in secondary circuits of cooling distribution systems:

Regulations	From	Target
(EC) N. 641/2009 and subsequent updates	1 August 2015	**EEI** < 0,23

- **Three-phase motors** with frequency 50 or 60 or 50/60 Hz and voltages between 50 and 1000 V (S1 and D.O.L.):

Regulations	From	Target
(EU) 2019/1781 and subsequent updates	1 July 2023	**IE2**: motors with a rated output ≥ 0,12 and < 0,749 kW **IE3**: motors with a rated output ≥ 0,75 and < 74,9 kW **IE4**: motors with a rated output ≥ 75 and < 200 kW **IE3**: motors with a rated output ≥ 201 and < 1000 kW

- **Single-phase motors** with frequency 50 or 60 or 50/60 Hz and voltages between 50 and 1000 V (S1 and D.O.L.):

Regulations	From	Target
(EU) 2019/1781 and subsequent updates	1 July 2023	**IE2**: motors with a rated output ≥ 0,12 kW

- **Variable speed drives** with three-phase input and rated output power from 0,12 kW up to 1000 kW, rated for operating with motor included in the same regulations:

Regulations	From	Target
(EU) 2019/1781 and subsequent updates	1 July 2021	**IE2**

Lowara, HYDROVAR, Solver are trademarks of Xylem Inc. or one of its subsidiaries.
All other trademarks or registered trademarks are property of their respective owners.

CONTENTS

GENERAL INTRODUCTION 6

APPLICATIONS, BENEFITS – Building Services 7

APPLICATIONS, BENEFITS – Industry 8

GENERAL CHARACTERISTICS 9

PUMPS (ErP 2009/125/EC) 9

IDENTIFICATION CODE 10

ELECTRIC PUMP RATING PLATE 11

ELECTRIC PUMP CROSS SECTION AND MAIN COMPONENTS 12

MECHANICAL SEALS 15

MOTORS (ErP 2009/125/EC) 17

HM..P SERIES

HYDRAULIC PERFORMANCE RANGE AT 50 Hz, 2 POLES 20

DIMENSIONS AND WEIGHTS, OPERATING CHARACTERISTICS AT 50 Hz, 2 POLES 22

HM..S - HM..N SERIES

HYDRAULIC PERFORMANCE RANGE AT 50 Hz, 2 POLES 28

DIMENSIONS AND WEIGHTS, OPERATING CHARACTERISTICS AT 50 Hz, 2 POLES 32

e-HM WITH VARIABLE FREQUENCY DRIVE

e-HME: VERSION WITH DRIVE AND PERMANENT MAGNET MOTOR (e-SM DRIVE) 51

e-HMX, e-HMK: VERSION WITH hydrovar X 87

REPORTS AND DECLARATIONS 101

TECHNICAL APPENDIX 103

e-HM SERIES
HYDRAULIC PERFORMANCE AT 50 Hz

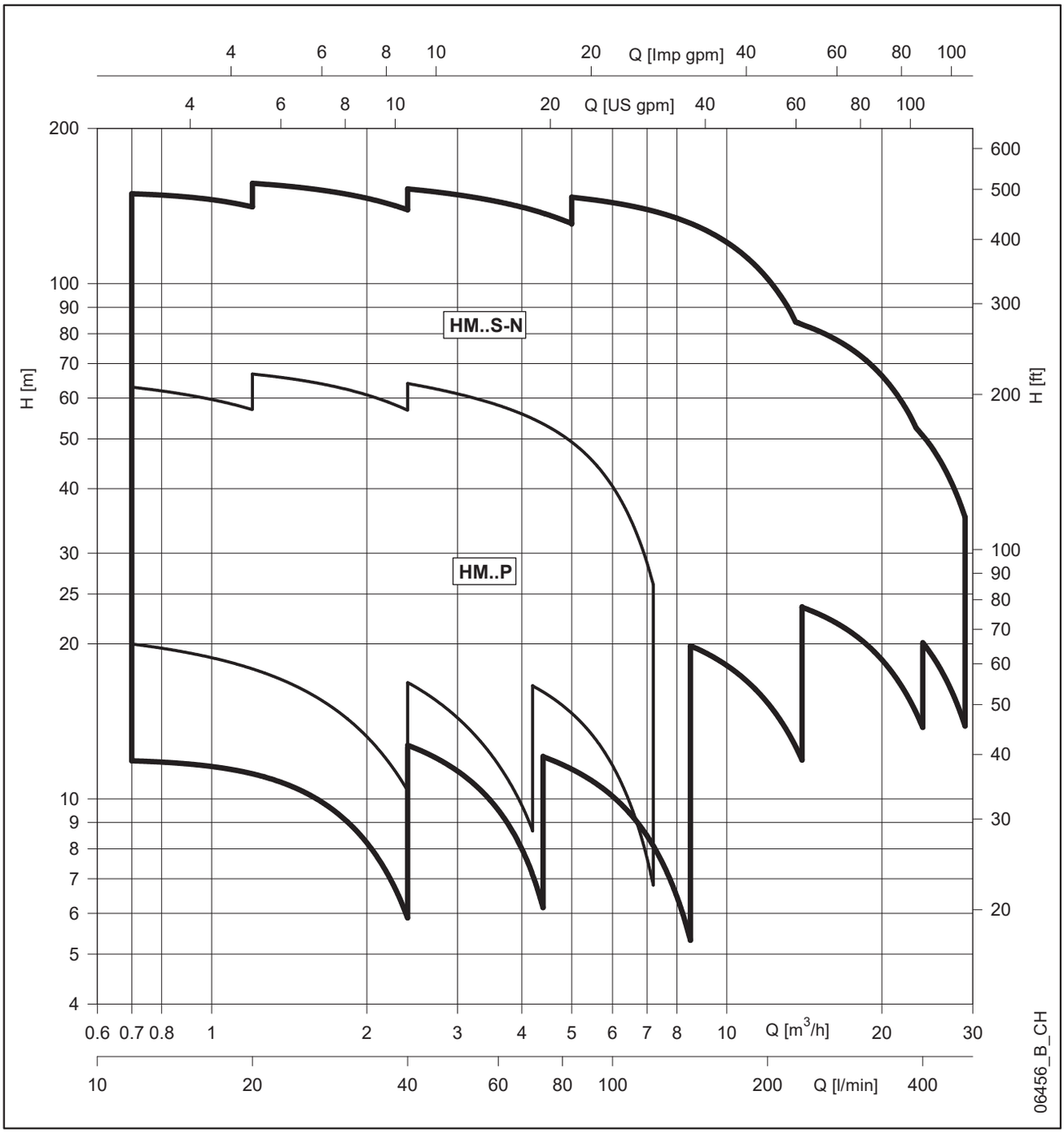

e-HM SERIES
High efficiency horizontal multistage pump
GENERAL INTRODUCTION

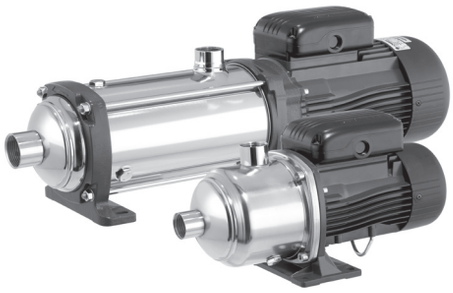

Our customers are central to our business
Many years of collaboration across global markets have given us a deep understanding of the specific needs of the **Building Services and Industrial** sectors.

That's why we developed the **e-HM** range of horizontal multistage pumps:
- **Energy efficiency** for the building services market
- **Reliability and compactness** for industrial applications

e-HM is the ideal solution for those seeking high performance, flexibility, and tailored solutions for demanding installations.

PUMP DESIGN

The e-HM is a **non-self-priming, horizontal multistage high-pressure centrifugal pump** with axial threaded suction and radial threaded discharge. Thanks to its modular construction and innovative hydraulic design, the e-HM ensures high efficiency and extended Mean Time Between Failures (MTBF).

Two configurations to meet every need
- **Compact design**: for 1HM, 3HM, and 5HM models up to 6 stages. Constructed from a single-piece stainless steel pump body directly connected to the motor flange, with a single O-ring to minimize leakage risk.
- **Sleeve design**: for 1HM, 3HM, and 5HM models with 7 stages and above, and for all 10HM, 15HM, and 22HM models. Built with a TIG-welded external stainless steel sleeve and a separate suction casing, held together by a die-cast aluminum bracket and stainless steel tie rods fixed to the motor flange.

Material combinations for every application
- **HM..P**: stainless steel pump body (EN 1.4301 / AISI 304) with technopolymer impeller (1, 3, 5HM up to 6 stages)
- **HM..S**: full stainless steel (EN 1.4301 / AISI 304)
- **HM..N**: full stainless steel (EN 1.4401 / AISI 316)

Operational Flexibility
The e-HM range is available in two versions to suit different system requirements:
- **Fixed-speed pump**: ideal for standard applications with constant operating conditions
- **Variable-speed pump**: for intelligent energy management and optimized efficiency, thanks to integrated inverter technology

SPECIFICATIONS

PUMP
- Flow rate: up to 29 m^3/h.
- Head: up to 159 m.
- Ambient temperature:
  - for single-phase version: from -15°C to +45°C.
  - for three-phase version: from -15°C to +50°C.
- Minimum temperature of the pumped liquid: from -10°C to -30°C according to gasket material.
- Maximum temperature of the pumped liquid:
  - for single-phase version: +90°C.
  - for three-phase version: up to +120°C depending on the model and the mechanical seal.
- Maximum operating pressure:
  - for pumps with technopolymer impeller: 10 bar (PN 10).
  - for pumps with stainless steel impeller: up to 16 bar (PN 16) depending on the model and the mechanical seal.
- Connections: Rp threaded for both suction and discharge manifold.
- Hydraulic performances compliant with ISO 9906:2012 - Grade 3B (ex ISO 9906:1999 - Annex A).

MOTOR
The e-HM are equipped with surface motors designed and manufactured in accordance with EN standards.
The e-HM series can be equipped as well with variable speed drivers.
- Electric short-circuit squirrel-cage motor (TEFC), enclosed construction, air-cooled.
- 2-pole.
- IP 55 protection grade as motor only (EN 60034-5).
- IP X5 as electric pump (EN 60335-1).
- Insulation class 155 (F).
- Performances according to EN 60034-1.
- Standard voltage:
  - Single-phase: 220-240 V, 50 Hz.
  - Three-phase: 220-240/380-415 V, 50 Hz for powers up to 3 kW. 380/415/660-690 V, 50 Hz for powers above 3 kW.
- Efficiency class:
  - IE2 for all single phase motors and for three-phase motors from 0,12 to 0,749 kW,
  - IE3 for three-phase motors from 0,75 to 5,5 kW.

The e-HM pumps are available in a version suitable for contact with drinking water.

e-HM SERIES
APPLICATIONS, BENEFITS – Building Services

The e-HM series and the different available configurations have been designed to cover a wide range of applications in the residential and small commercial building services from the water supply to pressure boosting as well as heating and cooling applications.

Applications
The e-HM series could be installed both in single private-own house and in small/medium residential buildings.

The e-HM series will be as well your preferred choice for water supply and pressure boosting in small block offices and shops. The e-HM series could be finally installed as well for small/medium irrigation installation.

Benefits
Payback: Installing the e-HM series guarantee a very short payback period as the premium efficiency makes the e-HM the lowest energy consuming fixed speed pump on the market.

Reliability: The e-HM series secures as well reliable operations over time thanks to its robust and innovative design. The variable speed operation reduces mechanical stress on the pump components and water hammering during stopping.

Comfort: The e-HM series guarantee as well an increased user comfort thanks to very silent operation.
The combination of the e-HM series with integrated variable speed drives will secure constant pressures at any points of water in your building and constant temperatures even when other taps are opened!








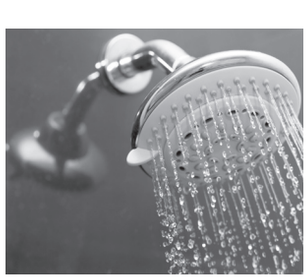

Features
- Compact design with best-in class performances.
- Wide range of performances with 6 sizes and flow up to 29 m^3/h.
- Versatile design of the smaller sizes (up to 5HM).
  - Compact version with technopolymer impellers for restricted space installation.
  - High efficiency version with stainless steel impellers when energy saving is a must.
- Robust and silent design of the larger sizes (from 10HM to 22HM) due the sleeve configuration.
- IE2/IE3 Lowara motors: high performances and silent operations.
- Stainless steel material for pump body and main components in contact with the pumped liquid.
- "Essential O-ring design" that highly reduces the sealing weaknesses (1 O-Ring for Compact, 2 for Sleeve).

e-HM SERIES
APPLICATIONS, BENEFITS – Industry

The e-HM series and the different available configurations and standard options have been designed to cover a wide range of applications in industry from washing and cleaning machines, to cooling and heating applications, through water treatment and filtration processes.

Applications

The e-HM series could be installed either in machines where compactness and high performances are a must or within industrial processes where the user looks for a reliable modular design with a restricted vertical footprint.

The e-HM series offers as well a wide range of standard options to fit every single requirement coming from the industry. The different material and configuration available allow e-HM series working with a wide range of liquid temperature starting -30°C to +120°C.



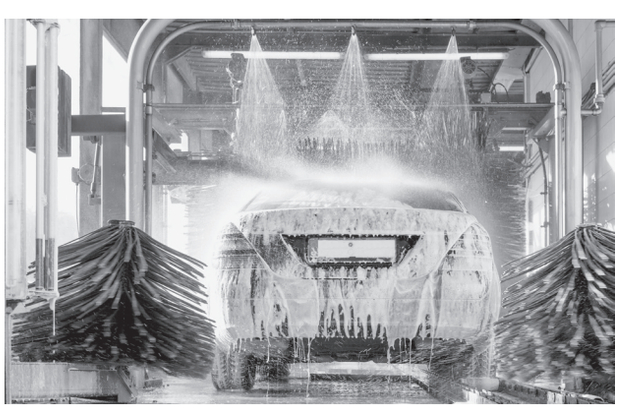

Benefits

Reliability: The e-HM series have been design to withstand heavy duty applications in Industry. For instance, e-HM balanced impeller helps decreasing the axial thrust withstand by the motor bearing extending its life time; pump body thickness has been increased by 20% to support heavy duty operation.

Versatility: The e-HM series have been designed to be modular, offering two different mechanical configurations (Very compact or highly efficient design) and multiple material executions (from technopolymer impeller and AISI 304 pump body to full AISI 316 execution). Multiple standard options make e-HM fitting in many different applications.

Performances: The e-HM series provide best-in class efficiency up to 72% that means 30% energy saving in average compare to similar pump design from the market. The e-HM series will be clearly your preferred choice to meet any efficiency requirements or simply to save money in your installation and processes.

A global platform: the e-HM series are assembled in different factories across the world to make e-HM always closer to our customers. Beyond our commitment to reduce the carbon footprint of e-HM, this global platform secure that the same design is available everywhere with the same quality processes.

Features

- Wide range of performances with 6 sizes, flow up to 29 m^3/h, pressure up to 159 meters.
- More than 85% of the range has the same suction height (90mm) for easy installation or system upgrade.
- Wide range of temperatures for pumped liquid: -30°C to +120°C (with stainless steel impellers).
- Wide range of voltages for worldwide applications.
- Availability of UL (cURus) motor version for North American market (three-phase motors at 60 Hz). The UL motors meet the requirements of the Premium Efficiency of US Department of Energy.
- "Essential O-ring design" that highly reduces the sealing weaknesses (1 O-Ring for Compact, 2 for Sleeve).
- IE2/IE3 Lowara motors: high performances and silent operations.

e-HM SERIES
GENERAL CHARACTERISTICS

HM..P SERIES	1	3	5
Max efficiency flow (m^3/h)	1.8	3.0	5
Flow range (m^3/h)	0,7÷2,4	1,2÷4,2	2,4÷7,2
Maximum head (m)	69.3	72.7	73.8
Motor power (kW)	0,30÷0,75	0,30÷1,1	0,40÷1,5
Max η (%) of pump	35	46	55
Temperature pumped liquid (°C)	-30... +90 (depending on the model and the mechanical seal)		

1-10hmp_2p50-en_e_tg

HM..S - HM..N SERIES	1	3	5	10	15	22
Max efficiency flow (m^3/h)	1,6	3,0	5,8	10,6	17,3	20,0
Flow range (m^3/h)	0,7÷2,4	1,2÷4,4	2,4÷8,5	5÷14	8÷24	11÷29
Maximum head (m)	151	159	159	158	102	76,4
Motor power (kW)	0,30÷1,5	0,30÷2,2	0,30÷3	0,75÷5,5	1,5÷5,5	2,2÷5,5
Max η (%) of pump	49	58	69	71	72	71
Temperature pumped liquid (°C)	-30... +90/120 (depending on the model and the mechanical seal)					

1-22hm_2p50-en_d_tg

CONNECTIONS

TYPE		HM..P - HM..S - HM..N SERIES					
		1	3	5	10	15	22
Rp thread (standard)	suction	1	1	1 1/4	1 1/2	2	2
	delivery	1	1	1	1 1/4	1 1/2	1 1/2
NPT thread (on request)	suction	1"	1"	1" 1/4	1" 1/2	2"	2"
	delivery	1"	1"	1"	1" 1/4	1" 1/2	1" 1/2
DN Victaulic® (on request)	suction	25	25	32	40	50	50
	delivery	25	25	25	32	40	40

1-22hm_2p50-en_b_tc

STORAGE AND TRANSPORT TEMPERATURE

from -40°C to +60°C.

PUMPS (ErP 2009/125/EC)

With the "Energy using Products" (EuP 2005/32/EC) and "Energy related Products" (ErP 2009/125/EC) directives, the European Commission has established requirements for promoting the use of products with low power consumption.

Among the various products considered there are also some typologies of pumps with the characteristics defined by the specific **Regulation (EU) n. 547/2012** implementing the requirements of Directives EuP and ErP.

The horizontal multistage pumps are not currently included within the scope of the Regulation.

e-HM SERIES
IDENTIFICATION CODE

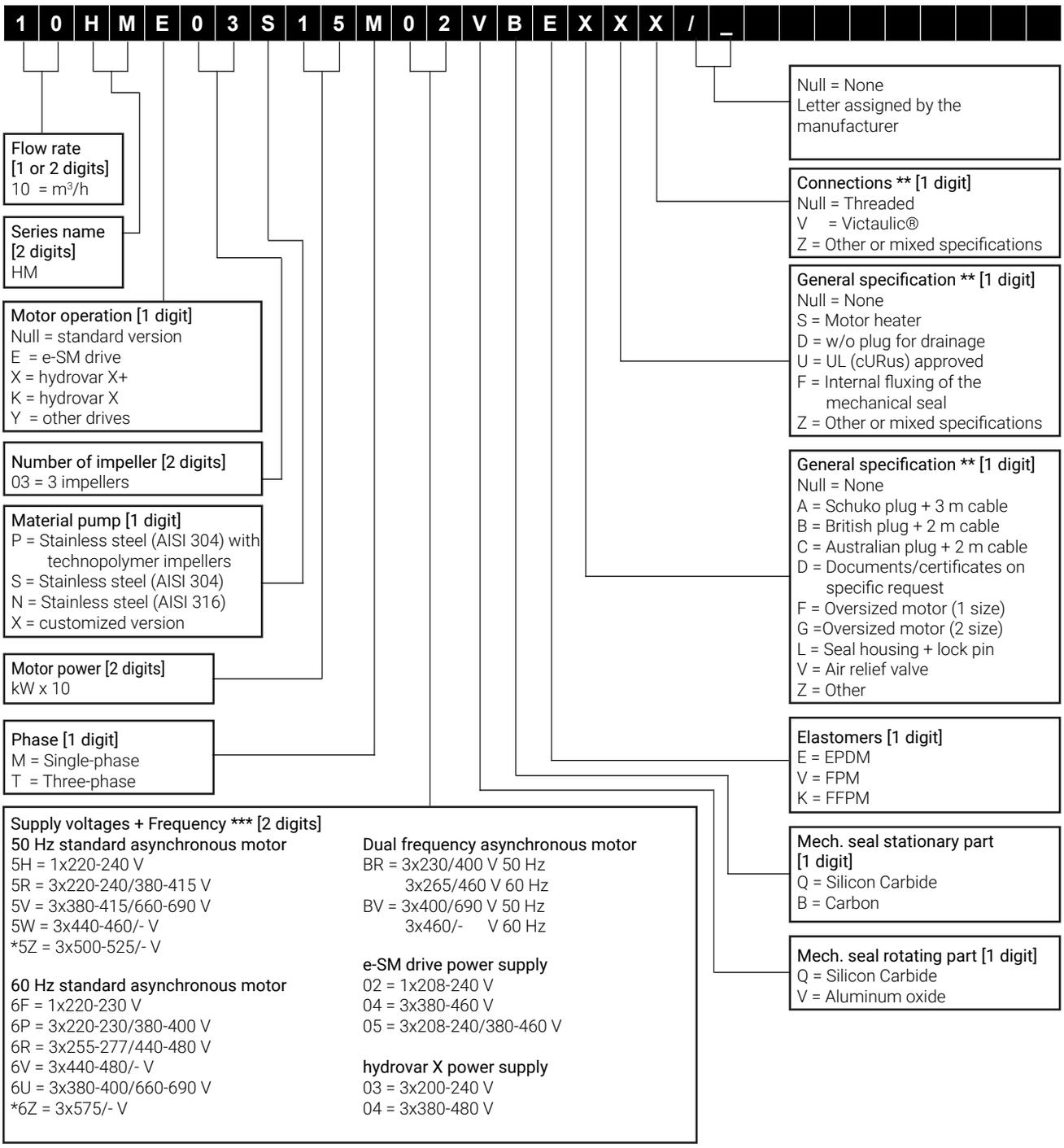

EXAMPLE: 10HME03S15M02VBE

10 = Flow rate 10 m³/h, **HM** = e-HM series electric pump, **E** = e-SM (SMART) coupling, **03** = number of impellers 3, **S** = Stainless steel (AISI 304) version, **15** = 1,5 kW rated motor power, **M** = single-phase, **02** = e-SM power supply 1x208-240, **VBE** =Aluminium/Carbon mechanical seal and EPDM elastomers.

* For uses other than EN 60335-2-41.
** If there isn't any character of general specification on the digit on the right, the digit is null, otherwise it is "X".
*** For the available electrical voltage, please, see page 19.
For special configurations please contact the sales network.

e-HM SERIES
ELECTRIC PUMP RATING PLATE

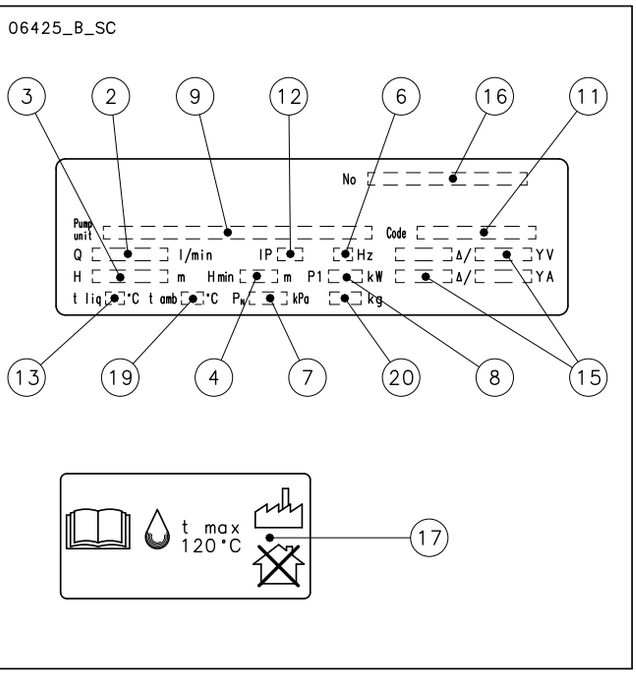

LEGEND

2 - Capacity range
3 - Head range
4 - Minimum head (EN 60335-2-41)
6 - Frequency
7 - Maximum operating pressure
8 - Electric pump unit absorbed power
9 - Pump / electric pump unit type
11 - Electric pump unit / pump part number
12 - Protection degree
13 - Maximum operating liquid temperature (uses as EN 60335-2-41)
15 - Rated voltage range
16 - Serial number (date + progressive number)
17 - Maximum operating liquid temperature (uses other than EN 60335-2-41)
19 - Maximum operating ambient temperature
20 - Electric pump weight

1, 3, 5 HM..P SERIES
ELECTRIC PUMP CROSS SECTION AND MAIN COMPONENTS

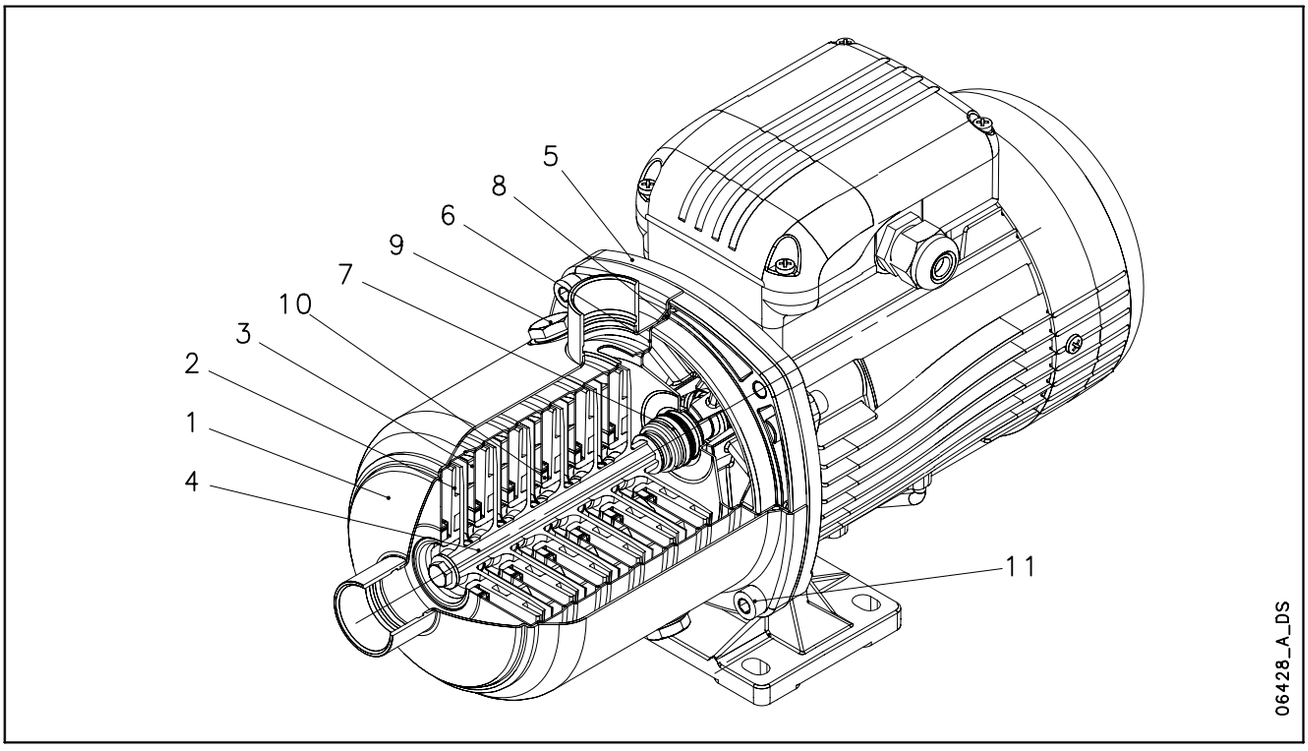

TABLE OF MATERIALS

REF. N.	NAME	MATERIAL	REFERENCE STANDARDS	
			EUROPE	USA
1	Pump body	Stainless steel	EN 10088-1-X5CrNi18-10 (1.4301)	AISI 304
2	Impeller	Technopolymer (PPO+PS+30%GF / PPE+PS+30%GF)		
3	Diffuser	Stainless steel	EN 10088-1-X5CrNi18-10 (1.4301)	AISI 304
4	Shaft	Stainless steel	EN 10088-1-X5CrNi18-10 (1.4301)	AISI 304
5	Adapter	Aluminium	EN 1706-AC-AlSi11Cu2 (Fe) (AC46100)	-
6	Seal housing	Stainless steel	EN 10088-1-X5CrNi18-10 (1.4301)	AISI 304
7	Mechanical seal	Ceramic / Carbon / EPDM		
8	Elastomers	EPDM		
9	Fill / drain plugs	Stainless steel	EN 10088-1-X5CrNiMo17-12-2 (1.4401)	AISI 316
10	Wear ring	Technopolymer (PPS)		
11	Bolts and screws	Stainless steel	EN 10088-1-X5CrNi18-10 (1.4301)	AISI 304

1-3-5hm-p-en_c_tm

1, 3, 5 HM..S - HM..N SERIES
ELECTRIC PUMP CROSS SECTION AND MAIN COMPONENTS

COMPACT DESIGN

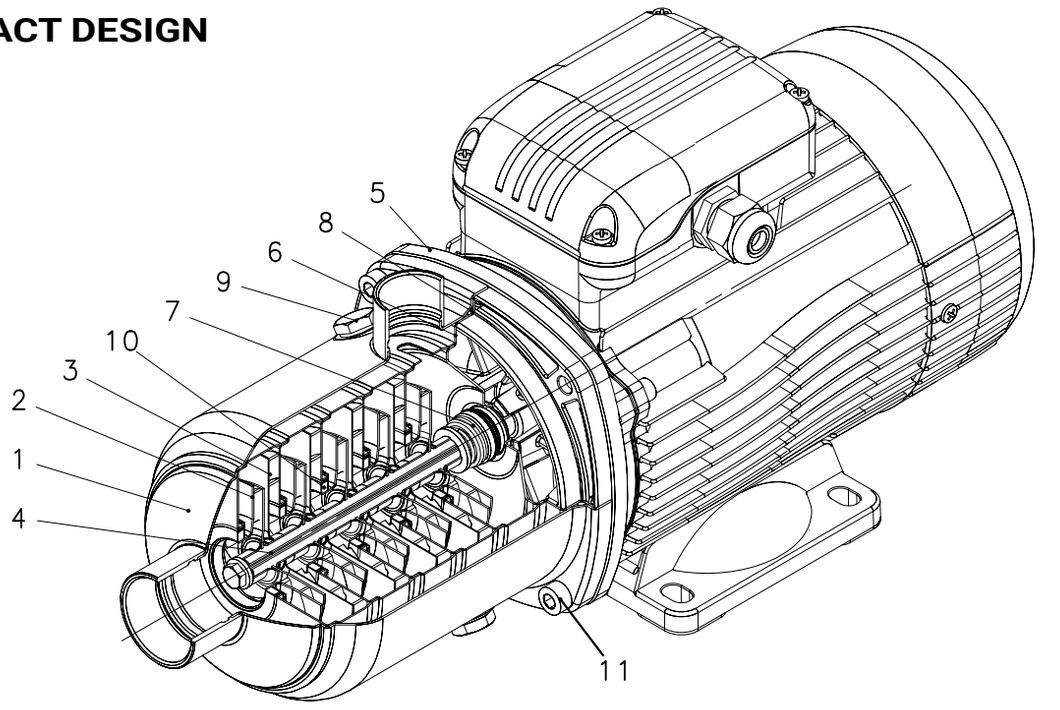

TABLE OF MATERIALS HM..S SERIES

REF. N.	NAME	MATERIAL	REFERENCE STANDARDS	
			EUROPE	USA
1	Pump body	Stainless steel	EN 10088-1-X5CrNi18-10 (1.4301)	AISI 304
2	Impeller	Stainless steel	EN 10088-1-X5CrNi18-10 (1.4301)	AISI 304
3	Diffuser	Stainless steel	EN 10088-1-X5CrNi18-10 (1.4301)	AISI 304
4	Shaft	Stainless steel	EN 10088-1-X5CrNiMo17-12-2 (1.4401)	AISI 316
5	Adapter	Aluminium	EN 1706-AC-AlSi11Cu2 (Fe) (AC46100)	-
6	Seal housing	Stainless steel	EN 10088-1-X5CrNi18-10 (1.4301)	AISI 304
7	Mechanical seal	Ceramic / Carbon / EPDM		
8	Elastomers	EPDM		
9	Fill / drain plugs	Stainless steel	EN 10088-1-X5CrNiMo17-12-2 (1.4401)	AISI 316
10	Wear ring	Technopolymer (PPS)		
11	Bolts and screws	Stainless steel	EN 10088-1-X5CrNi18-10 (1.4301)	AISI 304

1-3-5hm-cp-s-en_a_tm

TABLE OF MATERIALS HM..N SERIES

REF. N.	NAME	MATERIAL	REFERENCE STANDARDS	
			EUROPE	USA
1	Pump body	Stainless steel	EN 10088-1-X2CrNiMo17-12-2 (1.4404)	AISI 316L
2	Impeller	Stainless steel	EN 10088-1-X2CrNiMo17-12-2 (1.4404)	AISI 316L
3	Diffuser	Stainless steel	EN 10088-1-X2CrNiMo17-12-2 (1.4404)	AISI 316L
4	Shaft	Stainless steel	EN 10088-1-X5CrNiMo17-12-2 (1.4401)	AISI 316
5	Adapter	Aluminium	EN 1706-AC-AlSi11Cu2 (Fe) (AC46100)	-
6	Seal housing	Stainless steel	EN 10088-1-X2CrNiMo17-12-2 (1.4404)	AISI 316L
7	Mechanical seal	Ceramic / Carbon / EPDM		
8	Elastomers	EPDM		
9	Fill / drain plugs	Stainless steel	EN 10088-1-X5CrNiMo17-12-2 (1.4401)	AISI 316
10	Wear ring	Technopolymer (PPS)		
11	Bolts and screws	Stainless steel	EN 10088-1-X5CrNi18-10 (1.4301)	AISI 304

1-3-5hm-cp-n-en_a_tm

1, 3, 5, 10, 15, 22 HM..S - HM..N SERIES
ELECTRIC PUMP CROSS SECTION AND MAIN COMPONENTS

SLEEVE DESIGN

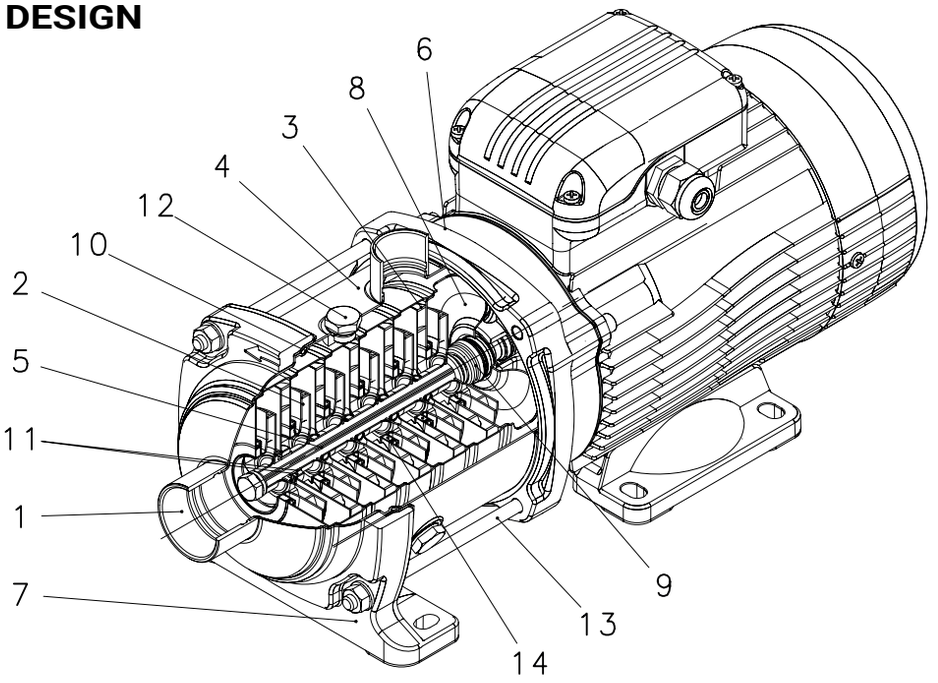

06427_A_DS

TABLE OF MATERIALS HM..S SERIES

REF. N.	NAME	MATERIAL	REFERENCE STANDARDS	
			EUROPE	USA
1	Head	Stainless steel	EN 10088-1-X5CrNi18-10 (1.4301)	AISI 304
2	Impeller	Stainless steel	EN 10088-1-X5CrNi18-10 (1.4301)	AISI 304
3	Diffuser	Stainless steel	EN 10088-1-X5CrNi18-10 (1.4301)	AISI 304
4	Outer sleeve	Stainless steel	EN 10088-1-X5CrNi18-10 (1.4301)	AISI 304
5	Shaft	Stainless steel	EN 10088-1-X5CrNiMo17-12-2 (1.4401)	AISI 316
6	Adapter	Aluminium	EN 1706-AC-AlSi11Cu2 (Fe) (AC46100)	-
7	Ring with foot	Aluminium	EN 1706-AC-AlSi11Cu2 (Fe) (AC46100)	-
8	Seal housing	Stainless steel	EN 10088-1-X5CrNi18-10 (1.4301)	AISI 304
9	Mechanical seal	Ceramic / Carbon / EPDM (PN10) - Silicon Carbide/Carbon/EPDM (PN16)		
10	Elastomers	EPDM		
11	Shaft sleeve and bushing	Tungsten carbide		
12	Fill / drain plugs	Stainless steel	EN 10088-1-X5CrNiMo17-12-2 (1.4401)	AISI 316
13	Tie rods	Stainless steel	EN 10088-1-X17CrNi16-2 (1.4057)	AISI 431
14	Wear ring	Technopolymer (PPS)		

1-22hm-cm-s_a_tm

TABLE OF MATERIALS HM..N SERIES

REF. N.	NAME	MATERIAL	REFERENCE STANDARDS	
			EUROPE	USA
1	Head	Stainless steel	EN 10088-1-X2CrNiMo17-12-2 (1.4404)	AISI 316L
2	Impeller	Stainless steel	EN 10088-1-X2CrNiMo17-12-2 (1.4404)	AISI 316L
3	Diffuser	Stainless steel	EN 10088-1-X2CrNiMo17-12-2 (1.4404)	AISI 316L
4	Outer sleeve	Stainless steel	EN 10088-1-X2CrNiMo17-12-2 (1.4404)	AISI 316L
5	Shaft	Stainless steel	EN 10088-1-X5CrNiMo17-12-2 (1.4401)	AISI 316
6	Adapter	Aluminium	EN 1706-AC-AlSi11Cu2 (Fe) (AC46100)	-
7	Ring with foot	Aluminium	EN 1706-AC-AlSi11Cu2 (Fe) (AC46100)	-
8	Seal housing	Stainless steel	EN 10088-1-X2CrNiMo17-12-2 (1.4404)	AISI 316L
9	Mechanical seal	Ceramic / Carbon / EPDM (PN10) - Silicon Carbide/Carbon/EPDM (PN16)		
10	Elastomers	EPDM		
11	Shaft sleeve and bushing	Tungsten carbide		
12	Fill / drain plugs	Stainless steel	EN 10088-1-X5CrNiMo17-12-2 (1.4401)	AISI 316
13	Tie rods	Stainless steel	EN 10088-1-X17CrNi16-2 (1.4057)	AISI 431
14	Wear ring	Technopolymer (PPS)		

1-22hm-cam-n-en_a_tm

e-HM SERIES
MECHANICAL SEALS

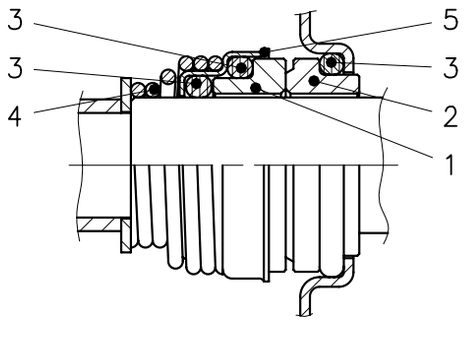

LIST OF MATERIALS

POSITION 1 - 2	POSITION 3	POSITION 4 - 5
V : Aluminium oxide	E : EPDM	G : AISI 316
Q : Silicon Carbide	V : FPM	
B : Carbon, resin-impregnated	K : FFPM (Kalrez)	

TYPE OF SEAL

1-22hm_ten-mec-en_d_tm

TYPE	POSITION 1 ROTATING PART	POSITION 2 STATIONARY PAR	POSITION 3 ELASTOMERS	POSITION 4 SPRINGS	POSITION 5 OTHER COMPONENTS	TEMPERATURE [b] (°C)	OPERATING PRESSURE
STANDARD MECHANICAL SEAL [a]							
VBEGG	V	B	E	G	G	-30 ÷ 90	PN10
QBEGG	Q	B	E	G	G	-30 ÷ 120	PN16
OTHER TYPES OF AVAILABLE MECHANICAL SEAL							
VBVGG (Ø14 mm)	V	B	V	G	G	-10 ÷ 90	PN10
VBVGG (Ø17 mm)	V	B	V	G	G	-10 ÷ 90	PN10
QBVGG	Q	B	V	G	G	-10 ÷ 90	PN16
QQVGG	Q	Q	V	G	G	-10 ÷ 90	PN16
QQKGG	Q	Q	K	G	G	-5 ÷ 90 (120)	PN16 (PN10)
QQEGG	Q	Q	E	G	G	-30 ÷ 90 (120)	PN16 (PN10)

a) Suitable for use with drinking water.

1-22hm-tipi-ten-mec-en_g_tc

b) For all **single-phase** versions and for **HM..P** limit the temperature to **+90°C**.
FPM elastomer (**V**): for applications in water or aqueous solutions the maximum temperature limit is **80 °C**.

PRESSURE/TEMPERATURE APPLICATION LIMITS FOR COMPLETE PUMP

The pressure limit could be different according to:

- stage number, please refer to the PN column of the DIMENSIONS AND WEIGHT tables;
- type of seal, please refer to the "Operating pressure" column of the TYPE OF SEAL table.

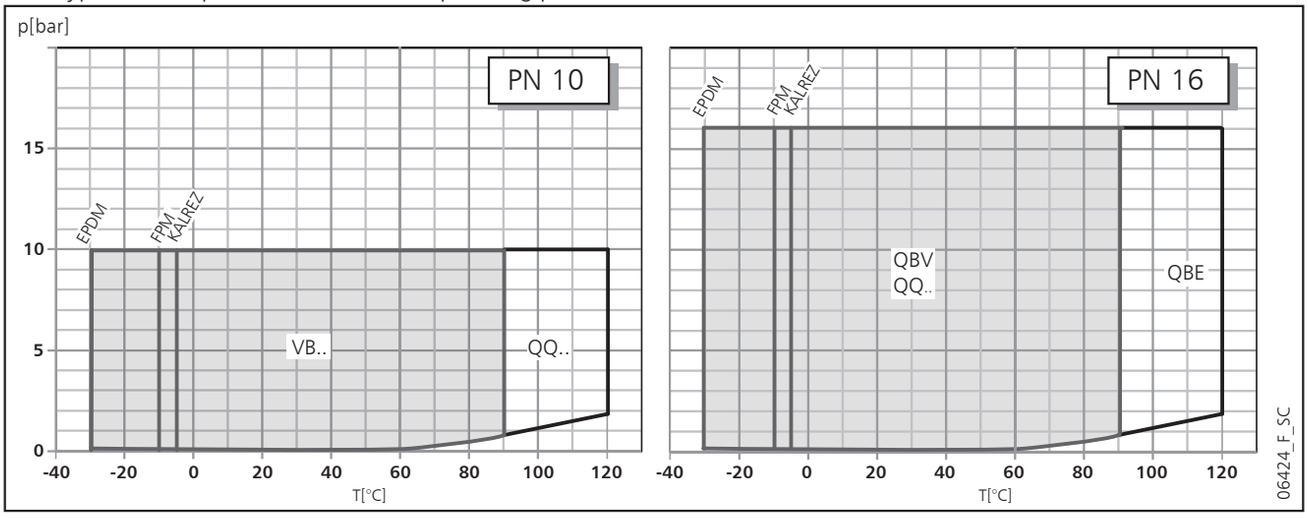

COMPATIBILITY CHART FOR MATERIALS IN CONTACT WITH MOST COMMONLY USED LIQUIDS

LIQUID	CONCENTRATION (%)	TEMPERAT. MIN/MAX (°C)	VERSION			ELASTOM.
			PLASTIC	AISI 304	AISI 316	
Acetone	10	-10 +90		•	•	E
Ammonia	10	-10 +40	•	•	•	E
Benzene	10	-10 +50		•	•	V
Citric acid	10	-10 +70	•	•	•	E
Cutting oil	100	-5 +110		•	•	V
Deionized, demineralized water	100	10 +110	•	•	•	V
Denatured alcohol	100	-5 +70	•	•	•	E
Diathermic oil	100	-5 +110		•	•	V
Diesel	100	-10 +80	•	•	•	V
Ethyl alcohol	100	-30 +50	•	•	•	E
Ethylene glycol	50	-30 +120		•	•	E
Glycerine	100	20 +90	•	•	•	E
Hydraulic oil	100	-5 +110		•	•	V
Hydrochloric acid	2	-10 +25	•		•	V
Methyl alcohol	100	-30 +50	•	•	•	E
Mineral oil	100	-5 +110		•	•	V
Mixture of water, detergents	20	10 +100	•	•	•	E
Phosphates-polyphosphates	10	-5 +90	•	•	•	V
Propyl alcohol (Propanol)	100	-5 +80		•	•	E
Propylene Glycol	50	-30 +120		•	•	E
Sea water (max 1000 ppm Chlorides)	100	-10 +30			•	V
Sodium bicarbonate	saturated		•	•	•	E
Sodium hydroxide	20	10 +70	•	•	•	E
Sodium hypochlorite	1	-10 +25	•		•	V
Sulfuric acid	2	-10 +25	•	•	•	V
Toluene	10	-10 +50		•	•	V
Uric acid	80	-10 +80		•	•	E
Vegetable oil	100	10 +110		•	•	V
Water and oil emulsion	all	-5 +90		•	•	V
Waterfall	100	10 +120	•	•	•	E

tab-comp-en_a_tm

The above table indicates the compatibility of materials depending on the pumped liquid.
Check the specific weight of the liquid or the viscosity as this could affect the power input of the motor

e-HM SERIES
MOTORS (ErP 2009/125/EC)

- Short-circuit squirrel-cage motor, enclosed construction with external ventilation (TEFC).
- **IP 55** protection degree.
- Insulation class **155 (F)**.
- Electrical performances according to EN 60034-1.
- Supplied **single-phase** surface motors with **IE2** efficiency level.
- Supplied **three-phase** surface motors with **IE2** efficiency level for power <0,75 kW, **IE3** efficiency level for power ≥ 0,75 kW as standard according to EN 60034-30:2009 and EN 60034-30-1:2014.
- Cable gland with metric according to EN 50262.

- **Single-phase** version:
  220-240 V 50 Hz
  Built-in automatic reset overload protection
  Maximum ambient temperature: 45 °C.
- **Three-phase** version:
  220-240/380-415 V 50 Hz for power up to 3 kW.
  380-415/660-690 V 50 Hz for power above 3 kW.
  Overload protection to be provided by the user.
  Maximum ambient temperature: 50 °C

From 1 July 2023 in accordance with the **Regulations (EU) 2019/1781 and 2021/341**, the **three-phase** 50 Hz, 60 Hz or 50/60 Hz **surface motors** with **power outputs ranging from 0,12 to 0,749 kW** must have a minimum level **IE2** efficiency; the ones with power outputs ranging **from 0,75 and 74,9 kW** must have a minimum level of **IE3** efficiency. The **single-phase surface motors** with **power outputs ranging from 0,12 kW** must have a minimum level **IE2** efficiency.

The following tables also contain the mandatory information pursuant to Annex I, section 2, of the aforementioned Regulations.

SINGLE-PHASE MOTORS AT 50 Hz, 2-POLE

P_N kW	MOTOR TYPE	IEC SIZE	Construction Design	INPUT CURRENT In (A) 220-240 V	CAPACITOR µF	CAPACITOR V	DATA FOR 230 V 50 Hz VOLTAGE min^{-1}	Is / In	η %	cosφ	Tn Nm	Ts/Tn	Tm/Tn	OPERATING CONDITIONS ** Altitude asl m	T. amb min/max °C	ATEX
0,4	SM63HM../1045 E2	63	SPECIAL	2,52-2,41	16	450	2800	3,24	70,4	0,99	1,36	0,66	1,98	≤1000	-15/45	No
0,55	SM71HM../1055 E2	71		3,33-3,19	16	450	2810	4,16	74,1	0,99	1,87	0,69	2,13			
0,75	SM80HM../1075 E2	80		4,38-4,27	25	450	2865	5,11	77,4	0,97	2,50	0,40	2,26			
1,1	SM80HM../1115 E2	80		6,26-5,93	30	450	2860	4,78	79,6	0,98	3,67	0,50	2,14			
1,5	PLM90HM../1155 E2	90		8,41-7,87	50	450	2890	6,71	81,3	0,97	4,95	0,59	2,78			

** Operating conditions related only to the motor. For the electric pump refer to the IOM.

1-22hm-motm_2p50-en_d_te

e-HM SERIES
THREE-PHASE MOTORS AT 50 Hz, 2-POLE

P_N kW	Manufacturer: Xylem Service Italia Srl, Reg. No. 07520560967, Montecchio Maggiore Vicenza - Italia — Model	IEC SIZE	Construction Design	N. of Poles	f_N Hz	Data for 400 V / 50 Hz Voltage: cosφ	Is / I_N	T_N Nm	T_s/T_N	T_m/T_n
0,30	SM63HM../303	63	SPECIAL	2	50	0,63	4,20	1,04	4,18	4,12
0,40	SM63HM../304	63				0,64	4,35	1,37	4,14	4,10
0,50	SM63HM../305	63				0,69	4,72	1,75	4,08	4,00
0,55	SM71HM../305	71				0,71	6,25	1,84	3,96	3,97
0,75	SM80HM../307 E3	80				0,78	7,38	2,48	3,57	3,75
1,1	SM80HM../311 E3	80				0,79	8,31	3,63	3,95	3,95
1,5	SM80HM../315 E3	80				0,80	8,80	4,96	4,31	4,10
2,2	PLM90HM../322 E3	90				0,80	8,77	7,28	3,72	3,70
3	PLM90HM../330 E3	90				0,79	7,81	9,93	4,26	3,94
4	PLM100HM../340 E3	100				0,85	9,13	13,2	3,82	4,32
5,5	PLM112HM../355 E3	112				0,85	10,5	18,1	4,74	5,11

P_N kW	Voltage U_N V: Δ 220 V	Δ 230 V	Δ 240 V	Y 380 V	Y 400 V	Y 415 V	Δ 380 V	Δ 400 V	Δ 415 V	Y 660 V	Y 690 V	n_N min^{-1}	Operating conditions **: Altitude Above Sea Level (m)	T. amb min/max °C	ATEX
	I_N (A)														
0,30	1,66	1,82	1,96	0,96	1,05	1,13	-	-	-	-	-	2715 ÷ 2775	≤ 1000	-15 / 50	No
0,40	2,03	2,18	2,32	1,17	1,26	1,34	-	-	-	-	-	2745 ÷ 2800			
0,50	2,42	2,51	2,65	1,40	1,45	1,53	-	-	-	-	-	2690 ÷ 2765			
0,55	2,46	2,49	2,56	1,42	1,44	1,48	-	-	-	-	-	2835 ÷ 2865			
0,75	2,96	2,94	2,96	1,71	1,70	1,71	1,70	1,69	1,70	0,98	0,98	2875 ÷ 2895			
1,1	4,19	4,14	4,16	2,42	2,39	2,40	2,41	2,38	2,38	1,39	1,37	2870 ÷ 2900			
1,5	5,56	5,49	5,51	3,21	3,17	3,18	3,21	3,18	3,19	1,85	1,84	2870 ÷ 2895			
2,2	7,97	7,90	7,98	4,60	4,56	4,61	4,57	4,54	4,57	2,64	2,62	2880 ÷ 2900			
3	11,0	11,0	11,2	6,35	6,33	6,44	6,29	6,27	6,34	3,63	3,62	2865 ÷ 2895			
4	13,6	13,4	13,4	7,87	7,75	7,74	7,80	7,62	7,61	4,50	4,40	2885 ÷ 2910			
5,5	18,1	17,9	18,1	10,4	10,4	10,4	10,6	10,5	10,7	6,10	6,05	2880 ÷ 2910			

P_N kW	Efficiency η_N % — Δ 220 V Y 380 V: 4/4	3/4	2/4	Δ 230 V Y 400 V: 4/4	3/4	2/4	Δ 240 V Y 415 V: 4/4	3/4	2/4	Δ 380 V Y 660 V: 4/4	3/4	2/4	Δ 400 V Y 690 V: 4/4	3/4	2/4	Δ 415 V: 4/4	3/4	2/4	IE
0,30	67,1	69,6	65,0	67,1	66,5	60,2	67,1	63,3	55,7	-	-	-	-	-	-	-	-	-	2
0,40	70,4	73,2	68,9	70,4	70,3	64,5	70,4	67,2	60,2	-	-	-	-	-	-	-	-	-	
0,50	73,0	76,1	73,4	73,0	73,8	69,6	73,0	71,3	65,7	-	-	-	-	-	-	-	-	-	
0,55	74,1	74,2	70,4	74,1	73,6	68,8	74,1	72,7	67,1	-	-	-	-	-	-	-	-	-	
0,75	82,5	83,1	81,3	82,8	82,7	80,1	82,6	82,0	78,9	82,5	82,0	78,9	82,5	82,0	78,9	82,5	82,0	78,9	3
1,1	84,0	84,7	83,4	84,4	84,5	82,5	84,3	84,0	81,4	84,0	84,0	81,4	84,0	84,0	81,4	84,0	84,0	81,4	
1,5	85,6	86,5	85,8	85,9	86,4	84,9	86,0	86,0	84,0	85,6	86,0	84,0	85,6	86,0	84,0	85,6	86,0	84,0	
2,2	86,5	87,4	86,8	86,4	86,9	85,7	86,6	86,7	85,0	86,4	86,7	85,0	86,4	86,7	85,0	86,4	86,7	85,0	
3	87,2	88,5	88,3	87,5	88,2	87,5	87,5	87,8	86,4	87,2	87,8	86,4	87,2	87,8	86,4	87,2	87,8	86,4	
4	89,1	90,1	89,2	89,1	90,1	89,2	89,1	90,1	89,2	89,1	90,3	90,4	89,6	90,4	89,9	89,6	90,1	89,2	
5,5	89,5	89,6	88,0	89,5	89,6	88,0	89,5	89,6	88,0	89,5	90,3	89,9	89,7	90,0	89,0	89,6	89,6	88,0	

** Operating conditions to be referred to motor only. About electric pump, refer to limits in user's manual.

1-22HM-ie3-mott-2p50-en_c_te

e-HM SERIES
AVAILABLE MOTORS

MOTOR TYPE	1-3-5 HM		10-15-22 HM	
	COMPACT	SLEEVE	COMPACT	SLEEVE
SM63HM…	●	-	-	-
SM71HM…	●	●	-	-
SM80HM…	●	●	●	●
PLM90HM…	-	●	●	●
PLM100HM…	-	-	-	●
PLM112HM…	-	-	-	●

● = compatible, - = not compatible

tab-acc-hm-en_a_sc

AVAILABLE MOTOR VOLTAGES, 2-POLE

P_N kW	50 Hz	60 Hz
	1 x 220-240	1 x 220-230
0,4	s	s
0,55	s	s
0,75	s	s
1,1	s	s
1,5	s	s

P_N kW	50 Hz				60 Hz					50/60 Hz		
	3 x 220-230-240/380-400-415	3 x 380-400-415/660-690	3 x 440-460/-	3 x 500-525/-	3 x 220-230/380-400	3 x 255-265-277/440-460-480	3 x 380-400/660-690	3 x 440-460-480/-	3 x 575*	3 x 200/400 50 Hz 3 x 208-230/400-480 60 Hz*	3 x 230/400 50 Hz 3 x 265/460 60 Hz	3 x 400/690 50 Hz 3 x 460/- 60 Hz
0,3	s	o	o	o	s	o	o	o	-	-	o	o
0,4	s	o	o	o	s	o	o	o	-	-	o	o
0,5	s	o	o	o	s	o	o	o	-	-	o	o
0,55	s	o	o	o	s	o	o	o	o	o	o	o
0,75	s	o	o	o	s	o	o	o	o	o	o	o
1,1	s	o	o	o	s	o	o	o	o	o	o	o
1,5	s	o	o	o	s	o	o	o	o	o	o	o
2,2	s	o	o	o	s	o	o	o	o	o	o	o
3	s	o	o	o	s	o	o	o	o	o	o	o
4	o	s	o	o	s	o	o	o	o	o	o	o
5,5	o	s	o	o	s	o	o	o	o	o	o	o

s = Standard voltage o = voltage upon request - = Not available

hm-volt-lowa-en_f_te

* = motors available in UL approved version.

Tolerances on nominal voltages

50 Hz:
± 10% on the single voltage value shown on the rating plate.
± 5% on voltage range shown on the rating plate.

60 Hz:
± 10% on the voltage values shown on the rating plate.
Only nominal voltages are allowed on UL motors.

ELECTRIC PUMP NOISE

The tables below show the mean sound pressure levels (Lp) measured at 1 meter distance in a free field according to EN ISO 11203. The noise values are measured on 50 Hz motors and have a tolerance of 3 dB (A) according to EN ISO 4871.

POWER	[kW]	0,3	0,4	0,5	0,55	0,75	0,95	1,1	1,5	2,2	3	4	5,5
NOISE	LpA [dB]	52	52	52	55	55	55	60	60	60	60	60	60

1-22hm_mot_2p50-en_b_tr

HM..P SERIES
HYDRAULIC PERFORMANCE RANGE AT 50 Hz, 2 POLES

HM..P	~ 2900 [rpm]	ISO 9906:2012 - Grade 3B

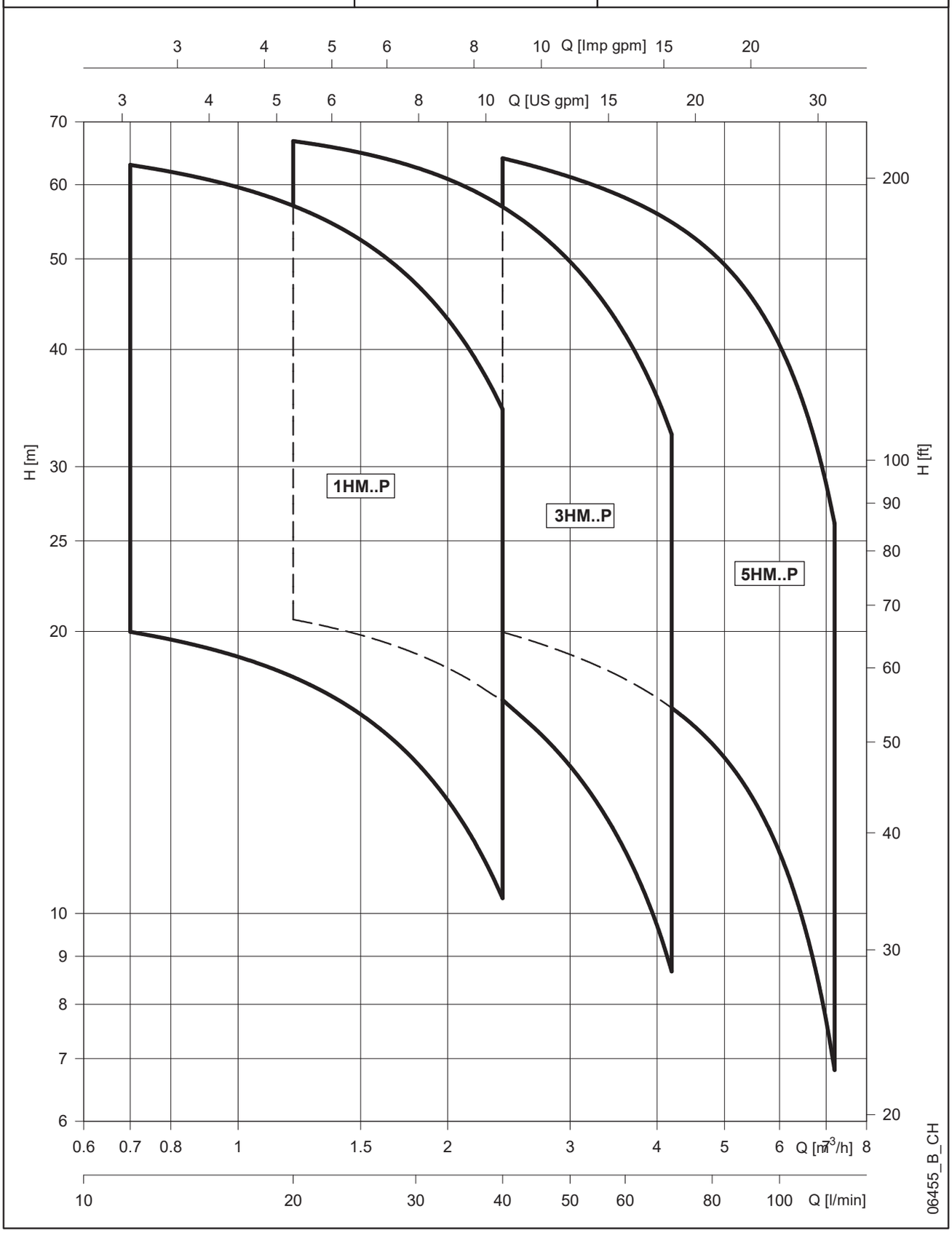

HM..P SERIES
HYDRAULIC PERFORMANCE TABLE AT 50 Hz, 2 POLES

PUMP TYPE HM..P	VERSION	MOTOR P_N kW	MOTOR TYPE	ELECTRIC PUMP * P_1 kW	ELECTRIC PUMP * I 220-240 V A	ELECTRIC PUMP * I 380-415 V A	Q = DELIVERY l/min 0	11.7	16.0	21.0	26.0	31.0	36.0	40.0
							m^3/h 0	0.7	1.0	1.3	1.6	1.9	2.2	2.4
							H = TOTAL HEAD IN METRES OF COLUMN OF WATER							
1HM03	1 ~	0.40	SM63HM../1045	0.50	2.10	-	33.9	30.5	29.0	27.0	24.5	21.8	18.7	16.1
1HM04	1 ~	0.40	SM63HM../1045	0.59	2.51	-	44.3	39.7	37.6	34.7	31.5	27.7	23.6	20.2
1HM05	1 ~	0.55	SM71HM../1055	0.73	3.12	-	56.1	50.4	47.8	44.3	40.2	35.6	30.5	26.1
1HM06	1 ~	0.75	SM80HM../1075	0.88	3.91	-	68.8	62.4	59.5	55.5	50.7	45.2	39.1	33.8
1HM02	3 ~	0.30	SM63HM../303	0.36	1.89	1.09	22.5	20.2	19.2	17.9	16.2	14.4	12.4	10.6
1HM03	3 ~	0.30	SM63HM../303	0.47	1.94	1.12	32.8	29.2	27.5	25.4	22.9	20.1	17.1	14.5
1HM04	3 ~	0.40	SM63HM../304	0.58	2.34	1.35	44.1	39.3	37.2	34.3	31.0	27.3	23.2	19.8
1HM05	3 ~	0.50	SM63HM../305	0.69	2.64	1.52	54.4	48.1	45.4	41.7	37.5	32.9	27.8	23.5
1HM06	3 ~	0.75	SM80HM../307 E3	0.84	2.80	1.62	69.3	63.0	60.1	56.1	51.4	45.9	39.8	34.5

PUMP TYPE HM..P	VERSION	MOTOR P_N kW	MOTOR TYPE	ELECTRIC PUMP * P_1 kW	ELECTRIC PUMP * I 220-240 V A	ELECTRIC PUMP * I 380-415 V A	Q = DELIVERY l/min 0	20.0	28.0	36.0	44.0	52.0	60.0	70.0
							m^3/h 0	1.2	1.7	2.2	2.6	3.1	3.6	4.2
							H = TOTAL HEAD IN METRES OF COLUMN OF WATER							
3HM02	1 ~	0.40	SM63HM../1045	0.47	1.98	-	23.8	21.7	20.5	19.0	17.3	15.3	13.1	10.1
3HM03	1 ~	0.40	SM63HM../1045	0.59	2.51	-	35.0	31.5	29.6	27.3	24.5	21.5	18.2	13.7
3HM04	1 ~	0.55	SM71HM../1055	0.76	3.29	-	47.0	42.4	39.9	36.8	33.1	29.1	24.7	18.7
3HM05	1 ~	0.75	SM80HM../1075	0.96	4.22	-	59.7	54.5	51.7	48.0	43.6	38.5	33.0	25.5
3HM06	1 ~	1.1	SM80HM../1115	1.16	5.11	-	72.2	66.2	62.9	58.6	53.3	47.3	40.7	31.6
3HM02	3 ~	0.30	SM63HM../303	0.44	1.92	1.11	23.2	20.9	19.6	18.1	16.2	14.2	12.0	9.0
3HM03	3 ~	0.40	SM63HM../304	0.58	2.34	1.35	34.9	31.3	29.3	26.9	24.2	21.1	17.8	13.4
3HM04	3 ~	0.50	SM63HM../305	0.72	2.68	1.55	45.8	40.6	37.8	34.5	30.7	26.7	22.3	16.3
3HM05	3 ~	0.75	SM80HM../307 E3	0.92	2.96	1.71	60.2	55.1	52.3	48.7	44.2	39.2	33.7	26.2
3HM06	3 ~	1.1	SM80HM../311 E3	1.10	3.75	2.17	72.7	66.8	63.6	59.3	54.1	48.1	41.5	32.5

PUMP TYPE HM..P	VERSION	MOTOR P_N kW	MOTOR TYPE	ELECTRIC PUMP * P_1 kW	ELECTRIC PUMP * I 220-240 V A	ELECTRIC PUMP * I 380-415 V A	Q = DELIVERY l/min 0	40.0	53.0	66.0	79.0	92.0	105	120
							m^3/h 0	2.4	3.2	4.0	4.7	5.5	6.3	7.2
							H = TOTAL HEAD IN METRES OF COLUMN OF WATER							
5HM02	1 ~	0.40	SM63HM../1045	0.56	2.35	-	24.0	20.2	18.9	17.4	15.7	13.5	10.9	7.2
5HM03	1 ~	0.55	SM71HM../1055	0.78	3.36	-	36.0	30.3	28.2	25.9	23.3	20.1	16.1	10.6
5HM04	1 ~	0.75	SM80HM../1075	1.03	4.58	-	48.6	41.5	38.9	36.0	32.6	28.4	23.1	15.7
5HM05	1 ~	1.1	SM80HM../1115	1.29	5.67	-	61.0	52.5	49.2	45.7	41.5	36.3	29.8	20.5
5HM06	1 ~	1.1	SM80HM../1115	1.50	6.66	-	72.9	62.2	58.1	53.7	48.6	42.3	34.4	23.3
5HM02	3 ~	0.40	SM63HM../304	0.54	2.30	1.33	23.9	20.1	18.7	17.2	15.4	13.3	10.6	6.9
5HM03	3 ~	0.50	SM63HM../305	0.74	2.70	1.56	35.2	28.8	26.5	24.2	21.5	18.2	14.2	8.6
5HM04	3 ~	1.1	SM80HM../311 E3	1.01	3.60	2.08	49.3	42.9	40.4	37.7	34.5	30.4	25.2	17.8
5HM05	3 ~	1.1	SM80HM../311 E3	1.24	4.01	2.32	61.4	53.1	49.9	46.4	42.3	37.2	30.6	21.3
5HM06	3 ~	1.5	SM80HM../315 E3	1.47	4.95	2.86	73.8	64.0	60.2	56.1	51.2	45.0	37.3	26.1

Hydraulic performances in compliance with ISO 9906:2012 - Grade 3B (ex ISO 9906:1999 - Annex A)

1-10hm-p-2p50-en_e_th

* Maximum value in specified range: P1 = input power; I = input current.

1HM..P SERIES
DIMENSIONS AND WEIGHTS AT 50 Hz, 2 POLES

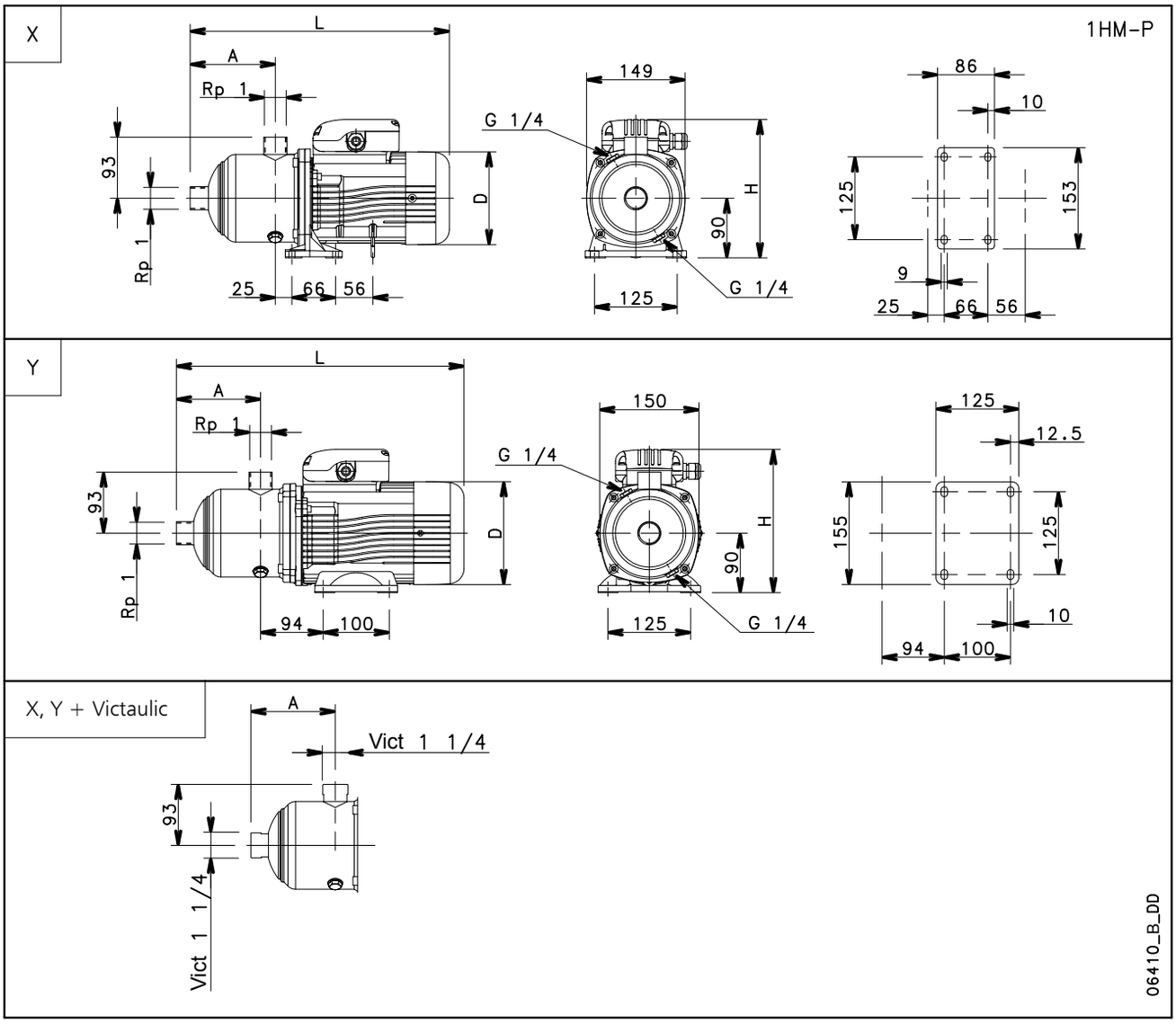

PUMP TYPE	VERSION	Ref.	MOTOR		DIMENSIONS (mm)				PN	WEIGHT
			kW	SIZE	A	D	H	L	bar	kg
1HM03	SINGLE-PHASE	X	0,40	63	87	120	201	336	10	7
1HM04			0,40	63	107	120	201	356	10	7
1HM05			0,55	71	127	140	211	390	10	9
1HM06		Y	0,75	80	147	155	227	455	10	9
1HM02	THREE-PHASE	X	0,30	63	87	120	201	336	10	6
1HM03			0,30	63	87	120	201	336	10	6
1HM04			0,40	63	107	120	201	356	10	7
1HM05			0,50	63	127	120	201	376	10	8
1HM06		Y	0,75	80	147	155	219	455	10	13

1hm-p-2p50-en_d_td

1HM..P SERIES
OPERATING CHARACTERISTICS AT 50 Hz, 2 POLES

1HM..P	~ 2900 [rpm]	ISO 9906:2012 - Grade 3B

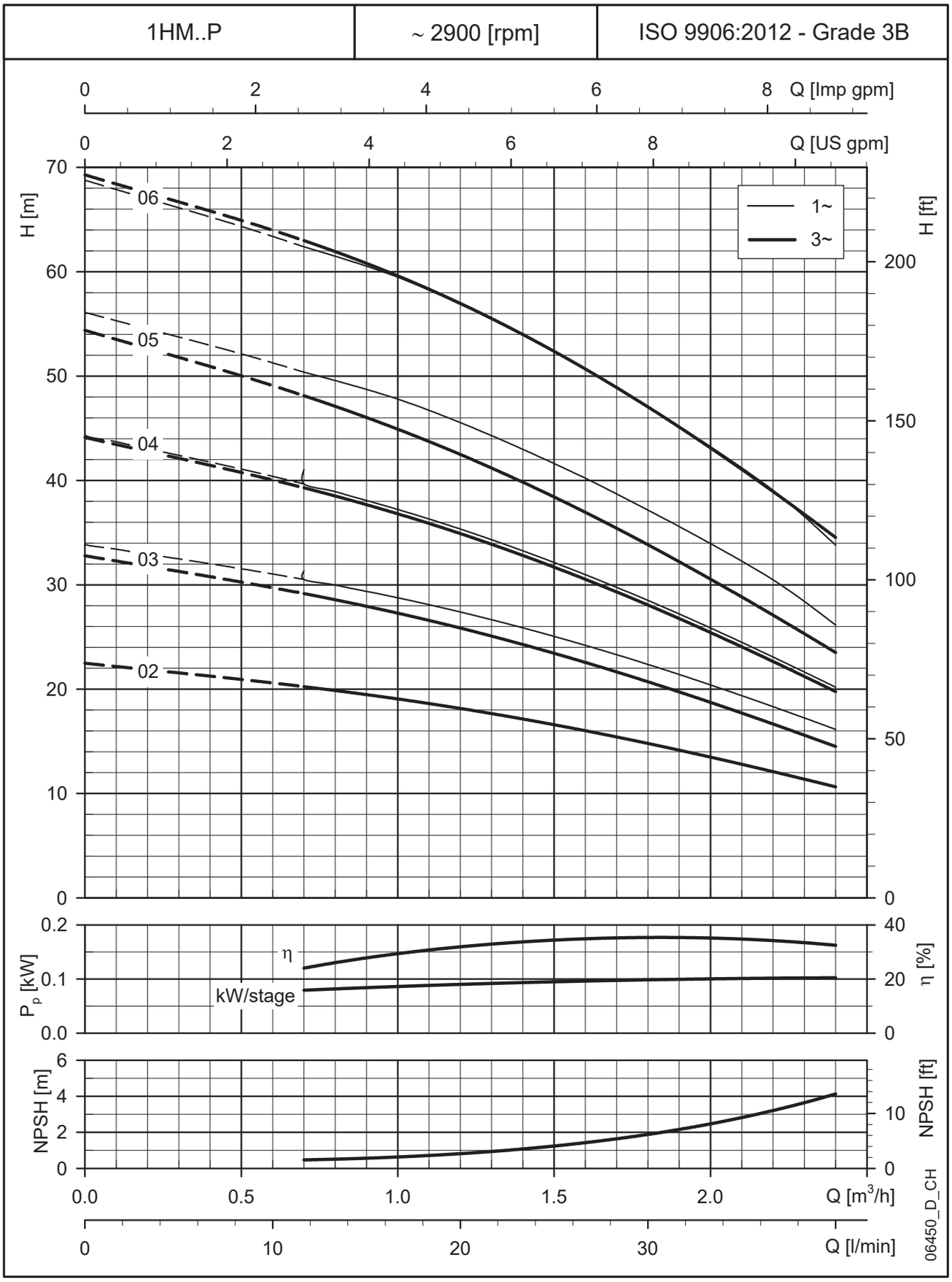

These performances are valid for liquids with density ρ = 1 Kg/dm^3 and kinematic viscosity ν = 1 mm^2/sec.

3HM..P SERIES
DIMENSIONS AND WEIGHTS AT 50 Hz, 2 POLES

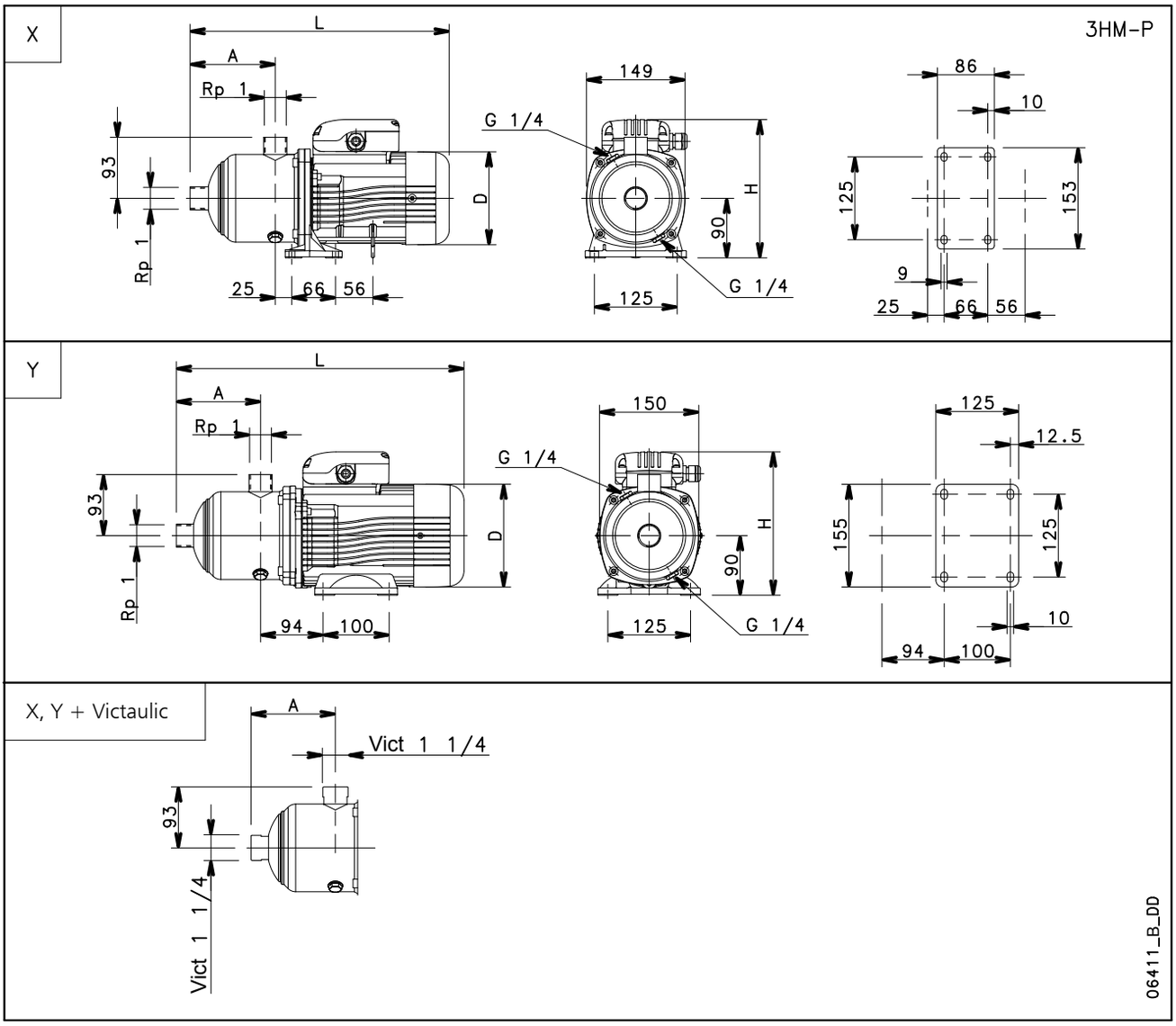

PUMP TYPE	VERSION	Ref.	MOTOR		DIMENSIONS (mm)				PN	WEIGHT
			kW	SIZE	A	D	H	L	bar	kg
3HM02	SINGLE-PHASE	X	0,40	63	87	120	201	336	10	7
3HM03			0,40	63	87	120	201	336	10	7
3HM04			0,55	71	107	140	211	370	10	9
3HM05		Y	0,75	80	127	155	227	435	10	10
3HM06			1,1	80	147	155	227	455	10	11
3HM02	THREE-PHASE	X	0,30	63	87	120	201	336	10	6
3HM03			0,40	63	87	120	201	336	10	6
3HM04			0,50	63	107	120	201	356	10	7
3HM05		Y	0,75	80	127	155	219	435	10	12
3HM06			1,1	80	147	155	219	455	10	13

3HM..P SERIES
OPERATING CHARACTERISTICS AT 50 Hz, 2 POLES

3HM..P	~ 2900 [rpm]	ISO 9906:2012 - Grade 3B

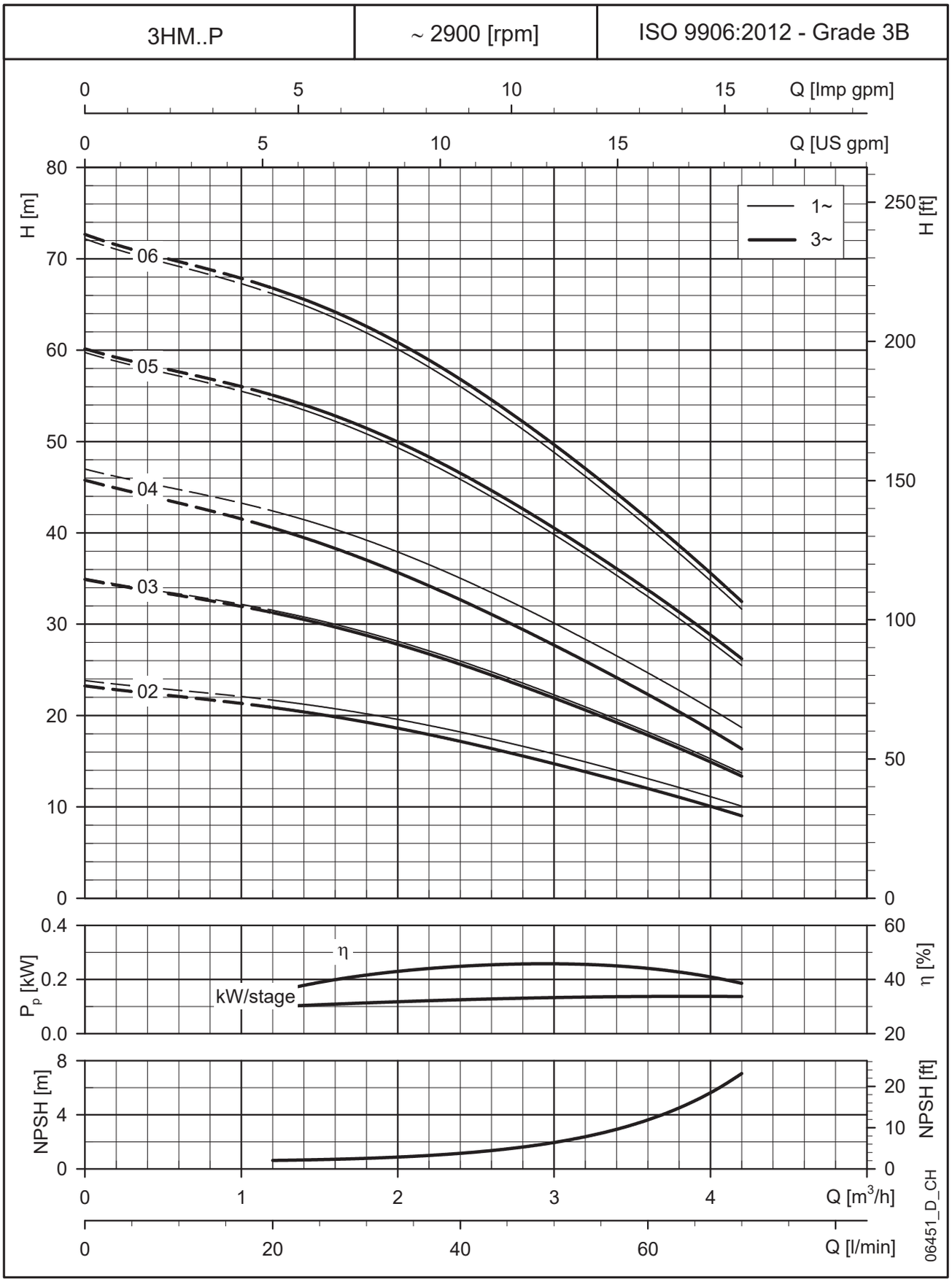

These performances are valid for liquids with density ρ = 1 Kg/dm³ and kinematic viscosity ν = 1 mm²/sec.

5HM..P SERIES
DIMENSIONS AND WEIGHTS AT 50 Hz, 2 POLES

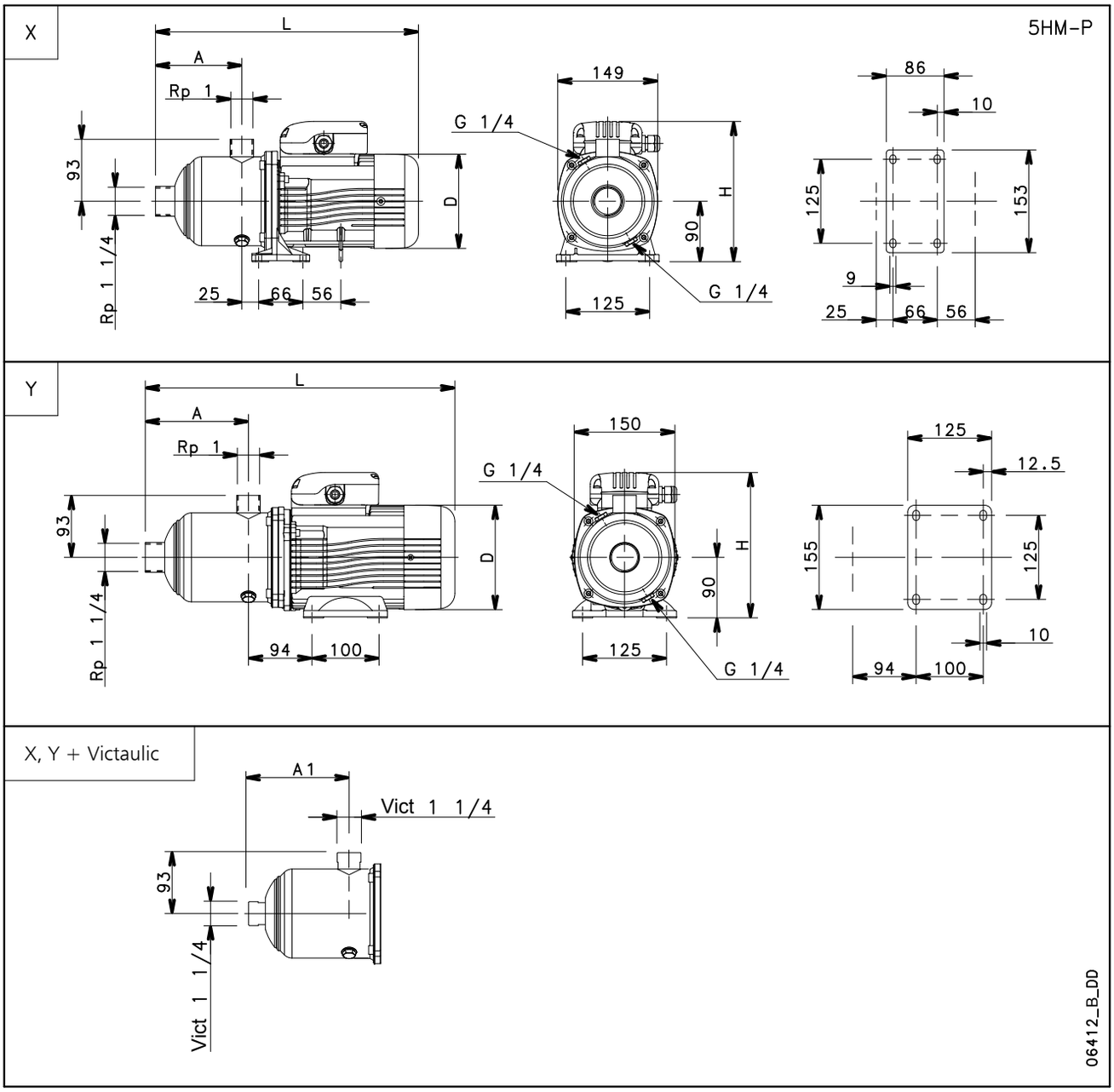

PUMP TYPE	VERSION	Ref.	MOTOR		DIMENSIONS (mm)					PN	WEIGHT
			kW	SIZE	A	A1	D	H	L	bar	kg
5HM02	SINGLE-PHASE	X	0,40	63	89	87,3	120	201	338	10	7
5HM03			0,55	71	89	87,3	140	211	352	10	9
5HM04		Y	0,75	80	109	107,3	155	227	417	10	10
5HM05			1,1	80	129	127,3	155	227	437	10	11
5HM06			1,1	80	149	147,3	155	227	457	10	14

5HM02	THREE-PHASE	X	0,40	63	89	87,3	120	201	338	10	6
5HM03			0,50	63	89	87,3	120	201	338	10	7
5HM04		Y	1,1	80	109	107,3	155	219	417	10	13
5HM05			1,1	80	129	127,3	155	219	437	10	14
5HM06			1,5	80	149	147,3	155	219	457	10	15

5hm-p-2p50-en_f_td

5HM..P SERIES
OPERATING CHARACTERISTICS AT 50 Hz, 2 POLES

5HM..P	~ 2900 [rpm]	ISO 9906:2012 - Grade 3B

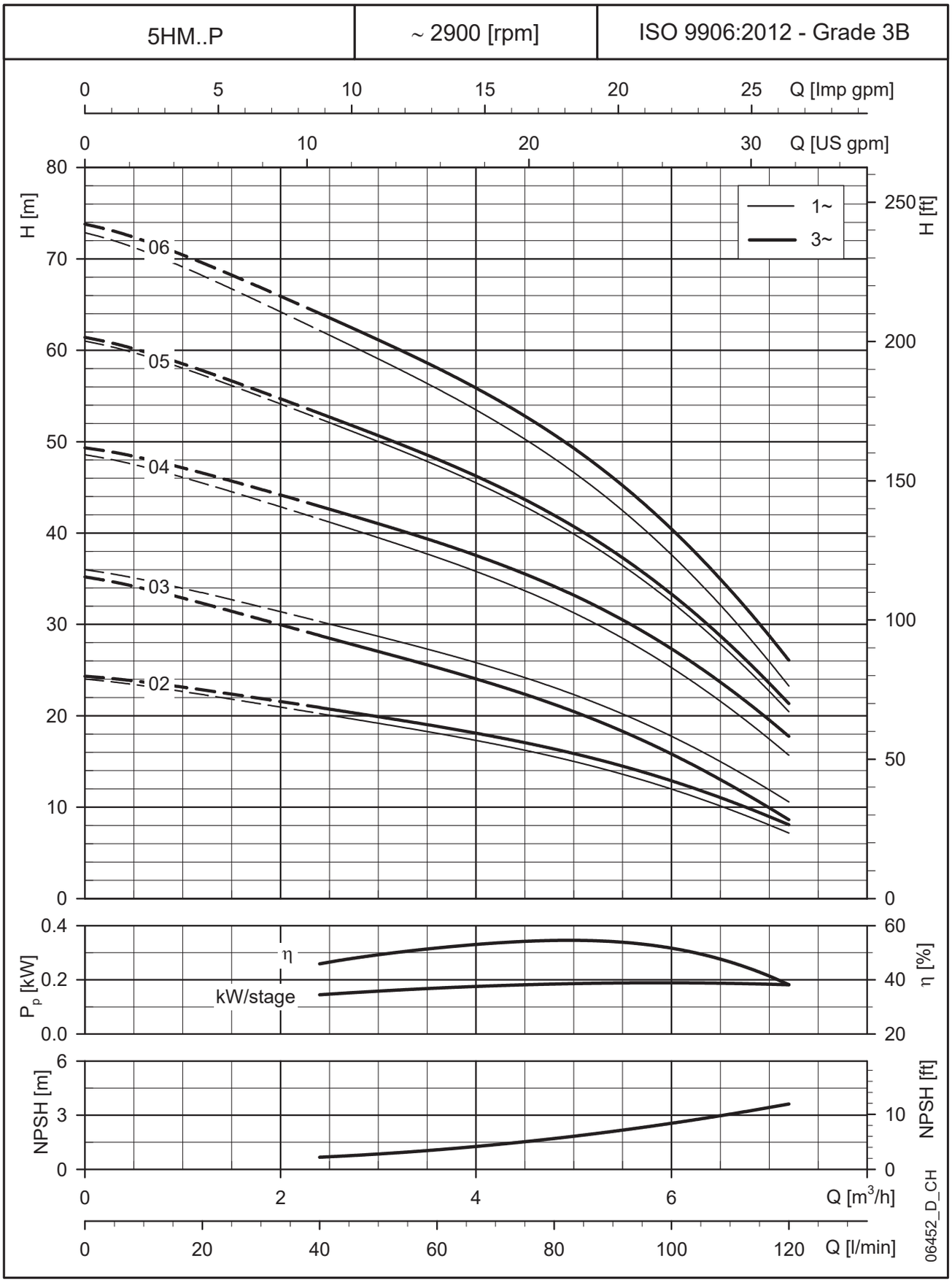

These performances are valid for liquids with density ρ = 1 Kg/dm³ and kinematic viscosity ν = 1 mm²/sec.

HM..S - HM..N SERIES
HYDRAULIC PERFORMANCE RANGE AT 50 Hz, 2 POLES

HM..S - HM..N	~ 2900 [rpm]	ISO 9906:2012 - Grade 3B

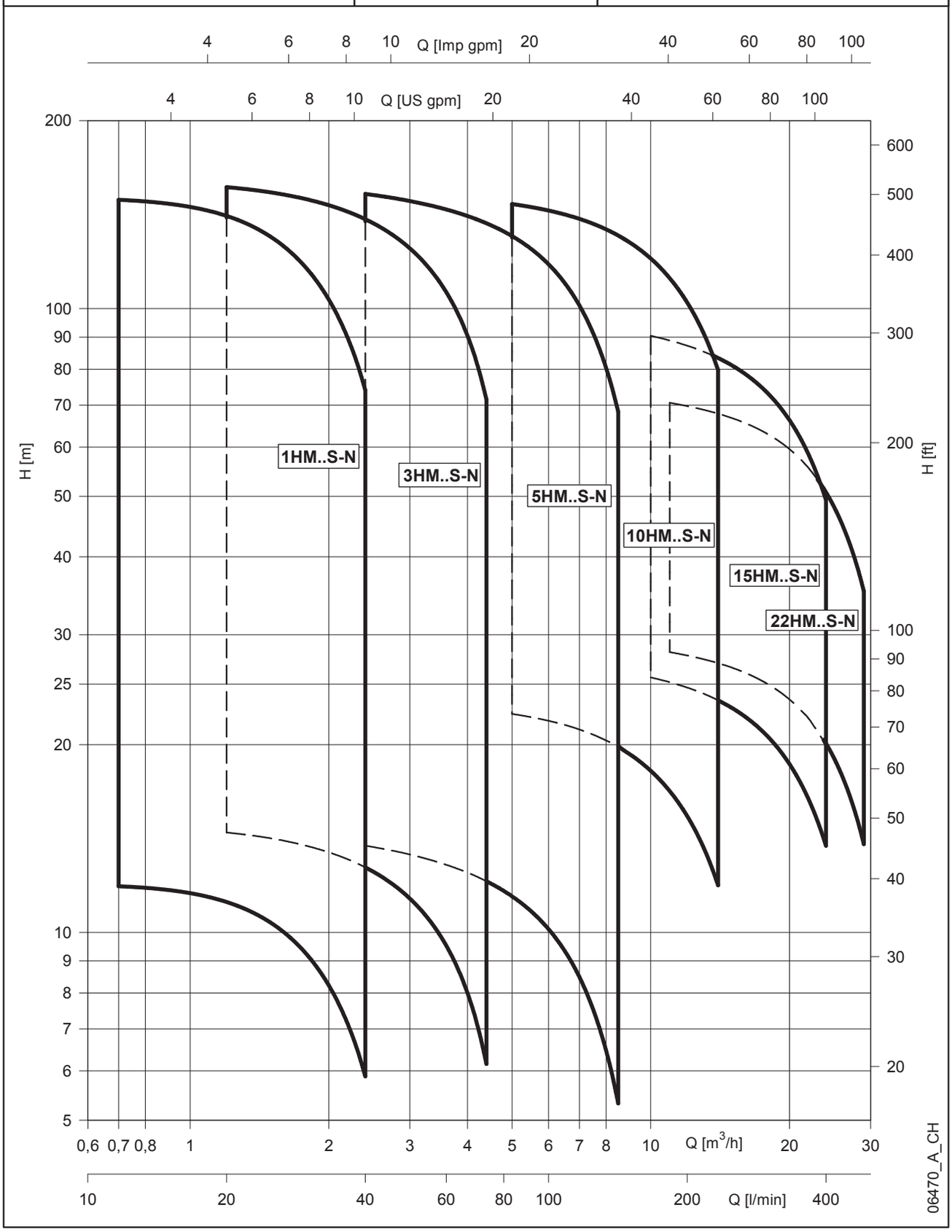

1, 3HM..S - HM..N SERIES
HYDRAULIC PERFORMANCE TABLE AT 50 Hz, 2 POLES

PUMP TYPE HM..S HM..N	VERSION	MOTOR P_N kW	MOTOR TYPE	ELECTRIC PUMP * P_1 kW	ELECTRIC PUMP * I 220-240 V A	ELECTRIC PUMP * I 380-415 V A	Q = DELIVERY l/min 0	11,7	16,0	21,0	26,0	31,0	36,0	40,0
							m^3/h 0	0,7	1,0	1,3	1,6	1,9	2,2	2,4
							H = TOTAL HEAD IN METRES OF COLUMN OF WATER							
1HM06	1 ~	0,40	SM63HM../1045	0,45	1,93	-	35,8	35,1	34,2	32,4	29,5	25,7	21,0	16,5
1HM07		0,55	SM71HM../1055	0,52	2,30	-	42,1	41,5	40,5	38,4	35,2	30,8	25,4	20,2
1HM08		0,55	SM71HM../1055	0,56	2,46	-	47,9	47,1	46,0	43,5	39,8	34,7	28,4	22,5
1HM09		0,55	SM71HM../1055	0,61	2,62	-	53,7	52,6	51,3	48,5	44,3	38,5	31,4	24,7
1HM11		0,55	SM71HM../1055	0,69	2,97	-	65,1	63,5	61,7	58,2	52,8	45,7	36,9	28,7
1HM12		0,55	SM71HM../1055	0,73	3,15	-	70,7	68,8	66,8	62,8	56,9	49,0	39,4	30,4
1HM14		0,75	SM71HM../1075	0,87	3,87	-	84,0	82,6	80,7	76,5	69,9	61,1	50,1	39,7
1HM16		0,75	SM71HM../1075	0,97	4,27	-	95,6	93,8	91,5	86,5	78,8	68,6	56,0	44,0
1HM18		1,1	SM71HM../1075	1,12	4,92	-	109	107	105	99,2	90,9	79,6	65,5	52,1
1HM20		1,1	SM80HM../1115	1,21	5,32	-	120	118	115	109	100	87,4	71,7	56,9
1HM22		1,1	SM80HM../1115	1,31	5,75	-	132	129	126	119	109	95,0	77,6	61,3
1HM25		1,1	SM80HM../1115	1,45	6,42	-	149	146	143	135	123	107	87,2	68,6
1HM02	3 ~	0,30	SM63HM../303	0,24	1,89	1,09	12,1	12,0	11,7	11,2	10,3	9,1	7,5	6,0
1HM03		0,30	SM63HM../303	0,28	1,87	1,08	18,0	17,7	17,3	16,4	15,0	13,2	10,8	8,6
1HM04		0,30	SM63HM../303	0,33	1,87	1,08	23,7	23,3	22,7	21,5	19,5	17,0	13,8	10,9
1HM05		0,30	SM63HM../303	0,38	1,89	1,09	29,4	28,7	27,9	26,2	23,8	20,6	16,6	12,8
1HM06		0,30	SM63HM../303	0,42	1,91	1,10	35,0	33,9	32,9	30,8	27,8	23,9	19,1	14,6
1HM07		0,55	SM71HM../305	0,48	2,23	1,29	42,4	41,9	41,1	39,0	35,8	31,5	26,1	20,9
1HM08		0,55	SM71HM../305	0,53	2,29	1,32	48,3	47,7	46,6	44,3	40,6	35,6	29,3	23,4
1HM09		0,55	SM71HM../305	0,58	2,36	1,36	54,2	53,3	52,1	49,4	45,2	39,6	32,5	25,8
1HM11		0,55	SM71HM../305	0,68	2,49	1,44	65,8	64,5	62,9	59,5	54,2	47,2	38,5	30,3
1HM12		0,55	SM71HM../305	0,73	2,58	1,49	71,6	70,0	68,2	64,4	58,6	50,9	41,4	32,4
1HM14		0,75	SM80HM../307 E3	0,83	2,79	1,61	84,6	83,4	81,5	77,4	70,9	62,1	51,2	40,8
1HM16		0,75	SM80HM../307 E3	0,93	2,98	1,72	96,3	94,6	92,4	87,6	80,1	70,0	57,4	45,5
1HM18		1,1	SM80HM../311 E3	1,05	3,66	2,11	109	108	106	100	92,1	81,0	67,0	53,7
1HM20		1,1	SM80HM../311 E3	1,15	3,85	2,22	121	119	117	111	102	89,2	73,6	58,7
1HM22		1,1	SM80HM../311 E3	1,26	4,06	2,34	133	131	128	121	111	97,2	79,9	63,6
1HM25		1,5	SM80HM../315 E3	1,42	4,87	2,81	151	149	146	139	128	112	92,5	74,0

PUMP TYPE HM..S HM..N	VERSION	MOTOR P_N kW	MOTOR TYPE	ELECTRIC PUMP * P_1 kW	ELECTRIC PUMP * I 220-240 V A	ELECTRIC PUMP * I 380-415 V A	Q = DELIVERY l/min 0	20,0	29,0	38,0	47,0	56,0	65,0	73,3
							m^3/h 0	1,2	1,7	2,3	2,8	3,4	3,9	4,4
							H = TOTAL HEAD IN METRES OF COLUMN OF WATER							
3HM03	1 ~	0,40	SM63HM../1045	0,43	1,86	-	22,5	22,0	21,1	19,8	18,0	15,8	12,9	9,7
3HM04		0,40	SM63HM../1045	0,50	2,12	-	29,7	28,9	27,5	25,7	23,3	20,2	16,4	12,0
3HM05		0,40	SM63HM../1045	0,57	2,43	-	36,9	35,5	33,7	31,3	28,2	24,3	19,4	14,0
3HM06		0,55	SM71HM../1055	0,69	2,95	-	44,6	43,3	41,3	38,5	34,8	30,2	24,4	17,9
3HM07		0,55	SM71HM../1055	0,76	3,30	-	51,7	49,9	47,5	44,1	39,7	34,2	27,4	19,8
3HM08		0,75	SM71HM./1075	0,90	3,97	-	60,1	58,8	56,4	52,9	48,1	42,1	34,5	25,8
3HM09		0,75	SM71HM../1075	0,98	4,35	-	67,4	65,8	62,9	58,9	53,5	46,6	38,0	28,2
3HM10		1,1	SM71HM../1075	1,13	4,95	-	75,5	74,1	71,2	66,8	61,0	53,5	44,1	33,3
3HM11		1,1	SM80HM../1115	1,21	5,32	-	82,8	81,2	77,8	73,0	66,5	58,3	47,8	35,9
3HM12		1,1	SM80HM../1115	1,30	5,70	-	90,2	88,2	84,4	79,1	72,0	62,9	51,4	38,5
3HM13		1,1	SM80HM../1115	1,38	6,11	-	97,4	95,1	91,0	85,1	77,3	67,3	54,9	40,9
3HM14		1,1	SM80HM../1115	1,47	6,53	-	105	102	97,4	90,9	82,4	71,7	58,2	43,0
3HM16		1,5	PLM90HM../1155	1,71	7,77	-	121	119	114	107	97,9	85,9	70,8	53,5
3HM17		1,5	PLM90HM../1155	1,80	8,16	-	128	126	121	113	103	90,7	74,6	56,2
3HM19		1,5	PLM90HM../1155	1,98	8,96	-	143	140	134	126	114	100	81,9	61,4
3HM02	3 ~	0,3	SM63HM../303	0,31	1,87	1,08	14,9	14,6	14,0	13,1	12,0	10,5	8,6	6,4
3HM03		0,3	SM63HM../303	0,39	1,90	1,10	22,1	21,4	20,3	18,9	17,1	14,8	12,0	8,6
3HM04		0,3	SM63HM../303	0,47	1,95	1,13	29,1	27,8	26,3	24,3	21,7	18,6	14,8	10,2
3HM05		0,4	SM63HM../304	0,55	2,32	1,34	36,8	35,3	33,5	31,0	27,9	24,1	19,2	13,5
3HM06		0,5	SM63HM../305	0,64	2,58	1,49	43,8	41,8	39,5	36,5	32,7	28,1	22,2	15,4
3HM07		0,75	SM80HM../307 E3	0,75	2,65	1,53	53,1	52,3	50,2	47,2	43,3	38,2	31,7	23,9
3HM08		0,75	SM80HM../307 E3	0,84	2,83	1,63	60,5	59,4	57,0	53,5	49,0	43,1	35,6	26,7
3HM09		1,1	SM80HM../311 E3	0,95	3,49	2,02	68,5	67,6	65,0	61,2	56,2	49,7	41,4	31,5
3HM10		1,1	SM80HM../311 E3	1,04	3,66	2,11	75,9	74,8	71,9	67,7	62,0	54,8	45,5	34,4
3HM11		1,1	SM80HM../311 E3	1,14	3,83	2,21	83,3	82,0	78,7	74,0	67,8	59,8	49,5	37,3
3HM12		1,1	SM80HM../311 E3	1,23	4,01	2,31	90,7	89,1	85,5	80,3	73,4	64,6	53,4	40,1
3HM13		1,1	SM80HM../311 E3	1,33	4,20	2,42	98,1	96,1	92,2	86,5	79,0	69,5	57,3	42,8
3HM14		1,5	SM80HM../315 E3	1,43	4,89	2,82	106	104	100	94,4	86,5	76,3	63,3	47,8
3HM16		1,5	SM80HM../315 E3	1,61	5,24	3,02	121	119	114	107	97,8	86,1	71,1	53,4
3HM17		1,5	SM80HM../315 E3	1,71	5,43	3,13	128	126	121	113	103	90,9	75,0	56,1
3HM19		2,2	PLM90HM../322 E3	1,94	6,78	3,91	144	142	137	129	118	104	86,7	65,6
3HM21		2,2	PLM90HM../322 E3	2,12	7,15	4,13	159	157	150	141	130	114	94,7	71,5

Hydraulic performances in compliance with ISO 9906:2012 - Grade 3B (ex ISO 9906:1999 - Annex A)

1-3hm-s-n-2p50-en_d_th

* Maximum value in specified range: P1 = input power; I = input current.

5HM..S - HM..N SERIES
HYDRAULIC PERFORMANCE TABLE AT 50 Hz, 2 POLES

PUMP TYPE HM..S HM..N	VERSION	MOTOR P_N kW	MOTOR TYPE	ELECTRIC PUMP * P_1 kW	* I 220-240 V A	* I 380-415 V A	Q = DELIVERY l/min 0	40,0	57,0	74,0	91,0	108	125	142
							m^3/h 0	2,4	3,4	4,4	5,5	6,5	7,5	8,5
							H = TOTAL HEAD IN METRES OF COLUMN OF WATER							
5HM02	1 ~	0,40	SM63HM../1045	0,45	1,91	-	15,0	14,4	13,8	12,9	11,8	10,4	8,5	6,3
5HM03		0,40	SM63HM../1045	0,56	2,36	-	22,3	21,1	20,0	18,6	16,9	14,7	11,8	8,5
5HM04		0,55	SM71HM../1055	0,72	3,07	-	29,8	28,4	26,9	25,1	22,8	19,9	16,1	11,6
5HM05		0,75	SM80HM../1075	0,89	3,97	-	37,6	36,3	34,6	32,5	29,9	26,3	21,6	16,0
5HM06		0,75	SM80HM../1075	1,03	4,60	-	45,0	43,1	41,0	38,4	35,1	30,7	25,1	18,3
5HM07		1,1	SM80HM../1115	1,23	5,38	-	52,8	50,9	48,6	45,7	41,9	37,0	30,4	22,5
5HM08		1,1	SM80HM../1115	1,36	6,01	-	60,2	57,8	55,0	51,6	47,3	41,5	34,0	25,0
5HM09		1,1	SM80HM../1115	1,50	6,68	-	67,5	64,6	61,3	57,4	52,4	45,8	37,3	27,2
5HM10		1,5	PLM90HM../1155	1,71	7,75	-	75,6	73,3	70,0	66,0	60,7	53,6	44,4	33,1
5HM11		1,5	PLM90HM../1155	1,85	8,37	-	83,0	80,3	76,6	72,1	66,2	58,4	48,1	35,7
5HM12		1,5	PLM90HM../1155	1,99	9,02	-	90,4	87,2	83,1	78,1	71,6	63,0	51,8	38,3
5HM02	3 ~	0,30	SM63HM../303	0,41	1,91	1,10	14,8	13,9	13,2	12,2	11,1	9,6	7,8	5,5
5HM03		0,40	SM63HM../304	0,54	2,30	1,33	22,2	20,9	19,7	18,3	16,5	14,3	11,5	8,2
5HM04		0,50	SM63HM../305	0,68	2,62	1,51	29,3	27,2	25,6	23,5	21,1	18,1	14,4	9,8
5HM05		0,75	SM80HM../307 E3	0,85	2,83	1,64	37,8	36,5	34,8	32,7	30,0	26,5	22,0	16,4
5HM06		1,1	SM80HM../311 E3	1,02	3,60	2,08	45,5	44,2	42,3	39,8	36,6	32,5	27,1	20,4
5HM07		1,1	SM80HM../311 E3	1,17	3,88	2,24	53,0	51,2	48,9	46,0	42,3	37,4	31,0	23,2
5HM08		1,1	SM80HM../311 E3	1,32	4,18	2,41	60,4	58,2	55,5	52,1	47,7	42,1	34,9	25,9
5HM09		1,5	SM80HM../315 E3	1,48	4,97	2,87	68,1	65,9	63,0	59,2	54,4	48,2	40,1	30,0
5HM10		1,5	SM80HM../315 E3	1,63	5,26	3,04	75,5	72,9	69,6	65,4	60,0	52,9	43,9	32,7
5HM11		1,5	SM80HM../315 E3	1,78	5,55	3,21	83,0	79,9	76,1	71,4	65,4	57,6	47,7	35,4
5HM12		2,2	PLM90HM../322 E3	1,97	6,83	3,94	91,0	88,3	84,4	79,5	73,1	64,7	54,0	40,6
5HM13		2,2	PLM90HM../322 E3	2,12	7,13	4,12	98,4	95,3	91,1	85,7	78,8	69,7	58,0	43,5
5HM14		2,2	PLM90HM../322 E3	2,27	7,42	4,28	106	102	97,8	91,9	84,3	74,5	61,9	46,2
5HM15		2,2	PLM90HM../322 E3	2,42	7,73	4,46	113	109	104	97,9	89,8	79,2	65,7	48,9
5HM17		3	PLM90HM../330 E3	2,77	9,77	5,64	129	125	119	112	103	91,2	75,9	56,9
5HM19		3	PLM90HM../330 E3	3,06	10,3	5,97	144	139	132	124	114	101	83,7	62,5
5HM21		3	PLM90HM../330 E3	3,36	10,9	6,31	159	153	146	137	125	110	91,3	67,8

Hydraulic performances in compliance with ISO 9906:2012 - Grade 3B (ex ISO 9906:1999 - Annex A)

5hm-s-n-2p50-en_d_th

* Maximum value in specified range: P1 = input power; I = input current.

10, 15, 22HM..S - HM..N SERIES
HYDRAULIC PERFORMANCE TABLE AT 50 Hz, 2 POLES

PUMP TYPE HM..S HM..N	VERSION	MOTOR P_N kW	MOTOR TYPE	ELECTRIC PUMP * P_1 kW	* I 220-240 V A	* I 380-415 V A	* I 660-690 V A	Q = DELIVERY l/min 0	83,3	108	133	158	183	208	233
								m^3/h 0	5,0	6,5	8,0	9,5	11,0	12,5	14,0
								H = TOTAL HEAD IN METRES OF COLUMN OF WATER							
10HM02	1 ~	1,1	SM80HM../1115	1,00	4,41	-	-	23,6	22,1	21,0	19,6	17,9	15,8	13,1	10,1
10HM03		1,1	SM80HM../1115	1,34	5,92	-	-	36,0	33,2	31,8	30,0	27,6	24,7	21,3	17,3
10HM04		1,5	PLM90HM../1155	1,78	8,04	-	-	48,3	44,9	43,1	40,7	37,7	33,8	29,3	24,0
10HM02	3 ~	0,75	SM80HM../307 E3	0,90	2,91	1,68	-	23,6	21,8	20,7	19,3	17,6	15,4	12,8	9,8
10HM03		1,1	SM80HM../311 E3	1,30	4,15	2,40	-	36,2	33,6	32,3	30,5	28,2	25,3	21,9	17,9
10HM04		1,5	SM80HM../315 E3	1,70	5,40	3,12	-	48,3	44,8	43,0	40,6	37,5	33,7	29,2	23,9
10HM05		2,2	PLM90HM../322 E3	2,14	7,17	4,14	-	60,6	56,4	54,3	51,4	47,6	42,8	37,1	30,5
10HM06		2,2	PLM90HM../322 E3	2,52	7,96	4,59	-	72,4	67,1	64,4	60,8	56,2	50,5	43,6	35,6
10HM07		3	PLM90HM../330 E3	2,96	10,2	5,87	-	84,8	78,8	75,8	71,7	66,3	59,7	51,7	42,4
10HM08		3	PLM90HM../330 E3	3,35	10,9	6,32	-	96,6	89,4	85,9	81,1	74,9	67,3	58,1	47,5
10HM09		4	PLM100HM../340 E3	3,75	-	6,74	3,89	109	102	98,3	93,1	86,3	77,9	67,7	55,7
10HM10		4	PLM100HM../340 E3	4,14	-	7,20	4,16	121	113	109	103	95,2	85,7	74,4	61,1
10HM11		4	PLM100HM../340 E3	4,52	-	7,70	4,45	133	124	119	112	104	93,5	81,0	66,4
10HM12		5,5	PLM112HM../355 E3	5,04	-	9,39	5,43	146	136	131	124	115	104	90,4	74,5
10HM13		5,5	PLM112HM../355 E3	5,42	-	9,82	5,68	158	147	142	134	124	112	97,3	80,0

PUMP TYPE HM..S HM..N	VERSION	MOTOR P_N kW	MOTOR TYPE	ELECTRIC PUMP * P_1 kW	* I 220-240 V A	* I 380-415 V A	* I 660-690 V A	Q = DELIVERY l/min 0	133	178	223	268	313	358	400
								m^3/h 0	8,0	10,7	13,4	16,1	18,8	21,5	24,0
								H = TOTAL HEAD IN METRES OF COLUMN OF WATER							
15HM02	1 ~	1,5	PLM90HM../1155	1,72	7,79	-	-	28,8	26,4	25,2	23,8	21,9	19,2	15,8	11,8
15HM02	3 ~	1,5	SM80HM../315 E3	1,63	5,29	3,05	-	28,8	26,3	25,2	23,8	21,8	19,2	15,7	11,7
15HM03		2,2	PLM90HM../322 E3	2,57	8,05	4,65	-	43,6	39,6	37,9	35,8	33,1	29,7	25,4	20,6
15HM04		3	PLM90HM../330 E3	3,40	11,06	6,39	-	58,1	52,8	50,6	47,7	44,2	39,6	33,8	27,4
15HM05		4	PLM100HM../340 E3	4,21	-	7,30	4,22	72,9	66,7	63,9	60,5	56,1	50,5	43,3	35,3
15HM06		5,5	PLM112HM../355 E3	5,13	-	9,50	5,49	87,8	80,4	77,2	73,2	67,9	61,2	52,7	43,1
15HM07		5,5	PLM112HM../355 E3	5,91	-	10,38	6,00	102	93,3	89,4	84,6	78,4	70,5	60,6	49,4

PUMP TYPE HM..S HM..N	VERSION	MOTOR P_N kW	MOTOR TYPE	ELECTRIC PUMP * P_1 kW	* I 220-240 V A	* I 380-415 V A	* I 660-690 V A	Q = DELIVERY l/min 0	183	233	283	333	383	433	483
								m^3/h 0	11,0	14,0	17,0	20,0	23,0	26,0	29,0
								H = TOTAL HEAD IN METRES OF COLUMN OF WATER							
22HM02	3 ~	2,2	PLM90HM../322 E3	2,37	7,64	4,41	-	30,2	28,0	26,7	25,0	22,7	19,5	15,4	10,4
22HM03		3	PLM90HM../330 E3	3,38	10,99	6,34	-	45,6	41,9	40,2	38,0	35,1	31,3	26,4	20,4
22HM04		4	PLM100HM../340 E3	4,44	-	7,56	4,37	61,0	56,3	54,0	51,1	47,3	42,3	35,8	27,9
22HM05		5,5	PLM112HM../355 E3	5,62	-	10,0	5,79	76,4	70,7	67,9	64,3	59,6	53,3	45,2	35,3

Hydraulic performances in compliance with ISO 9906:2012 - Grade 3B (ex ISO 9906:1999 - Annex A)

10-22hm-s-n-2p50-en_c_th

* Maximum value in specified range: P1 = input power; I = input current.

1HM..S - 1HM..N SERIES, (2 TO 9 STAGES)
DIMENSIONS AND WEIGHTS AT 50 Hz, 2 POLES

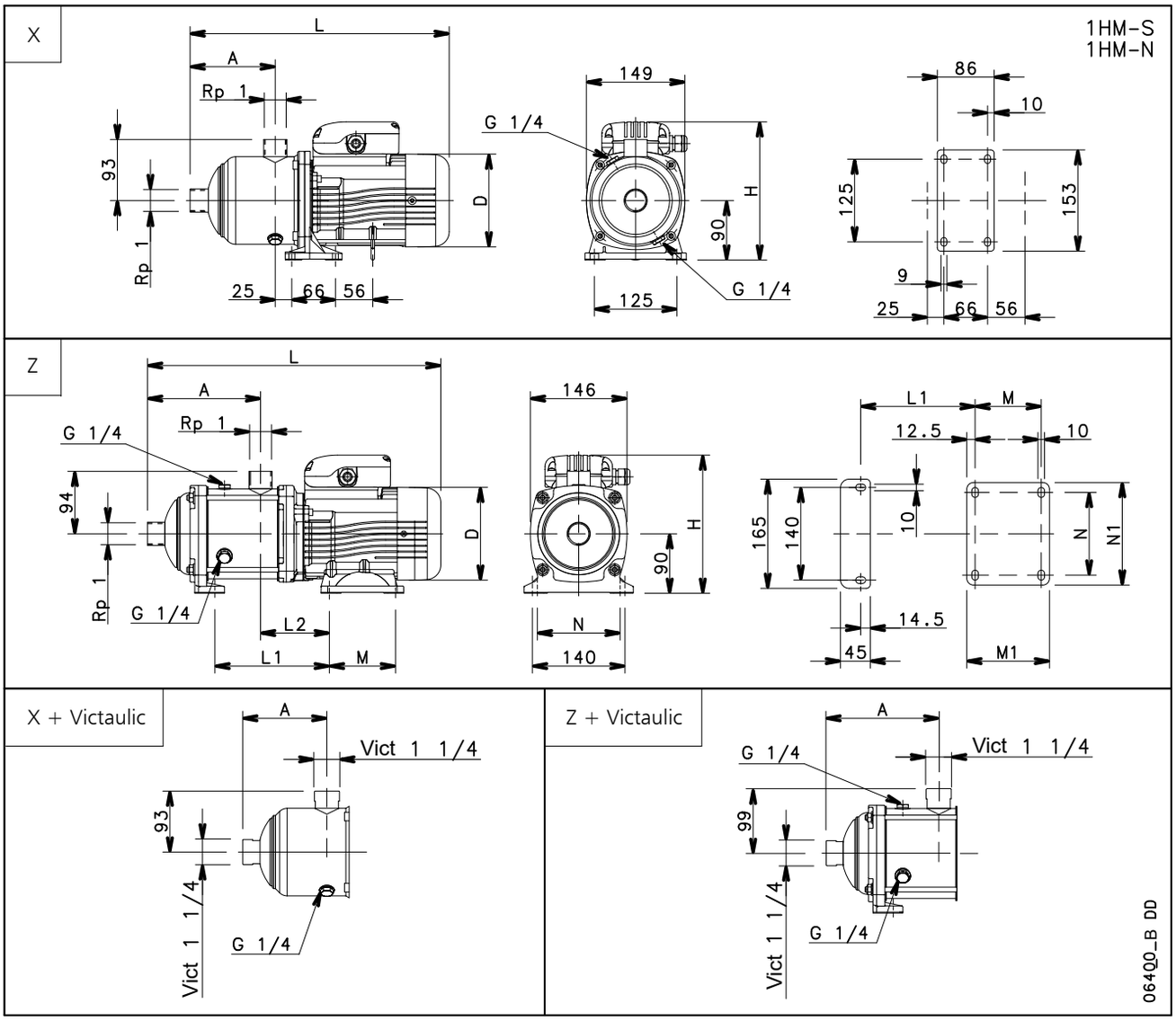

PUMP TYPE	VERSION	Ref.	MOTOR		DIMENSIONS (mm)										PN	WEIGHT
			kW	SIZE	A	D	H	L	L1	L2	M	M1	N	N1	bar	kg
1HM06	SINGLE-PHASE	X	0,40	63	147	120	201	396	-	-	-	-	-	-	10	8
1HM07		Z	0,55	71	151	140	211	424	153	104	100	125	125	155	10	10
1HM08			0,55	71	171	140	211	444	173	104	100	125	125	155	10	11
1HM09			0,55	71	191	140	211	464	193	104	100	125	125	155	10	11

1HM02	THREE-PHASE	X	0,30	63	87	120	201	336	-	-	-	-	-	-	10	6
1HM03			0,30	63	87	120	201	336	-	-	-	-	-	-	10	6
1HM04			0,30	63	107	120	201	356	-	-	-	-	-	-	10	7
1HM05			0,30	63	127	120	201	376	-	-	-	-	-	-	10	7
1HM06			0,30	63	147	120	201	396	-	-	-	-	-	-	10	7
1HM07		Z	0,55	71	151	140	211	424	153	104	100	125	125	155	10	10
1HM08			0,55	71	171	140	211	444	173	104	100	125	125	155	10	11
1HM09			0,55	71	191	140	211	464	193	104	100	125	125	155	10	11

1hm-s-n-2p50-1-en_d_td

You can use the pumps up to PN16 by mounting a mechanical seal PN16.
For mechanical seal, please refer to the TYPE OF SEAL table at page 15.

1HM..S - 1HM..N SERIES, (2 TO 9 STAGES)
OPERATING CHARACTERISTICS AT 50 Hz, 2 POLES

1HM..S - 1HM..N	~ 2900 [rpm]	ISO 9906:2012 - Grade 3B

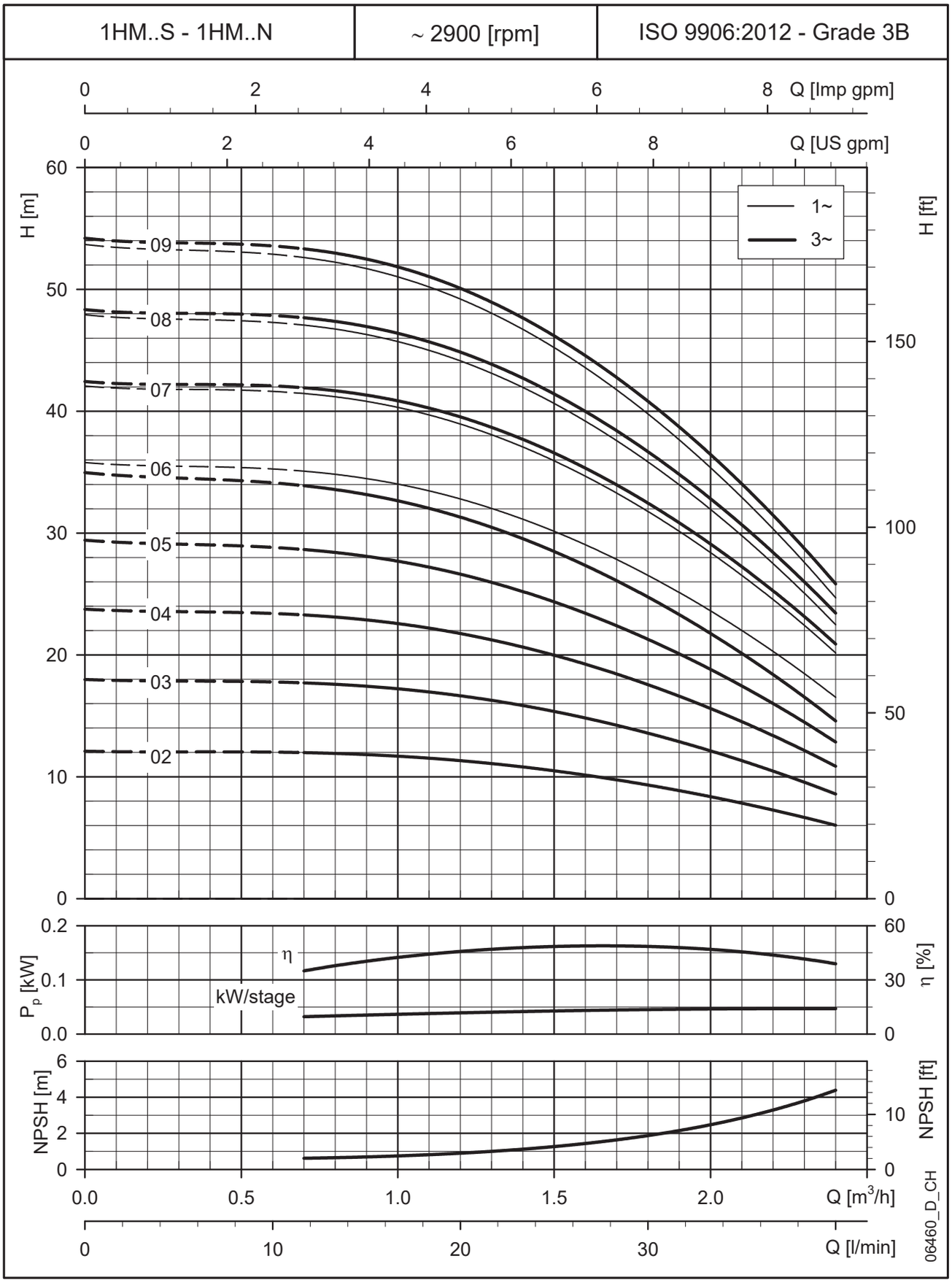

These performances are valid for liquids with density ρ = 1 Kg/dm³ and kinematic viscosity ν = 1 mm²/sec.

1HM..S - 1HM..N SERIES, (11 TO 25 STAGES)
DIMENSIONS AND WEIGHTS AT 50 Hz, 2 POLES

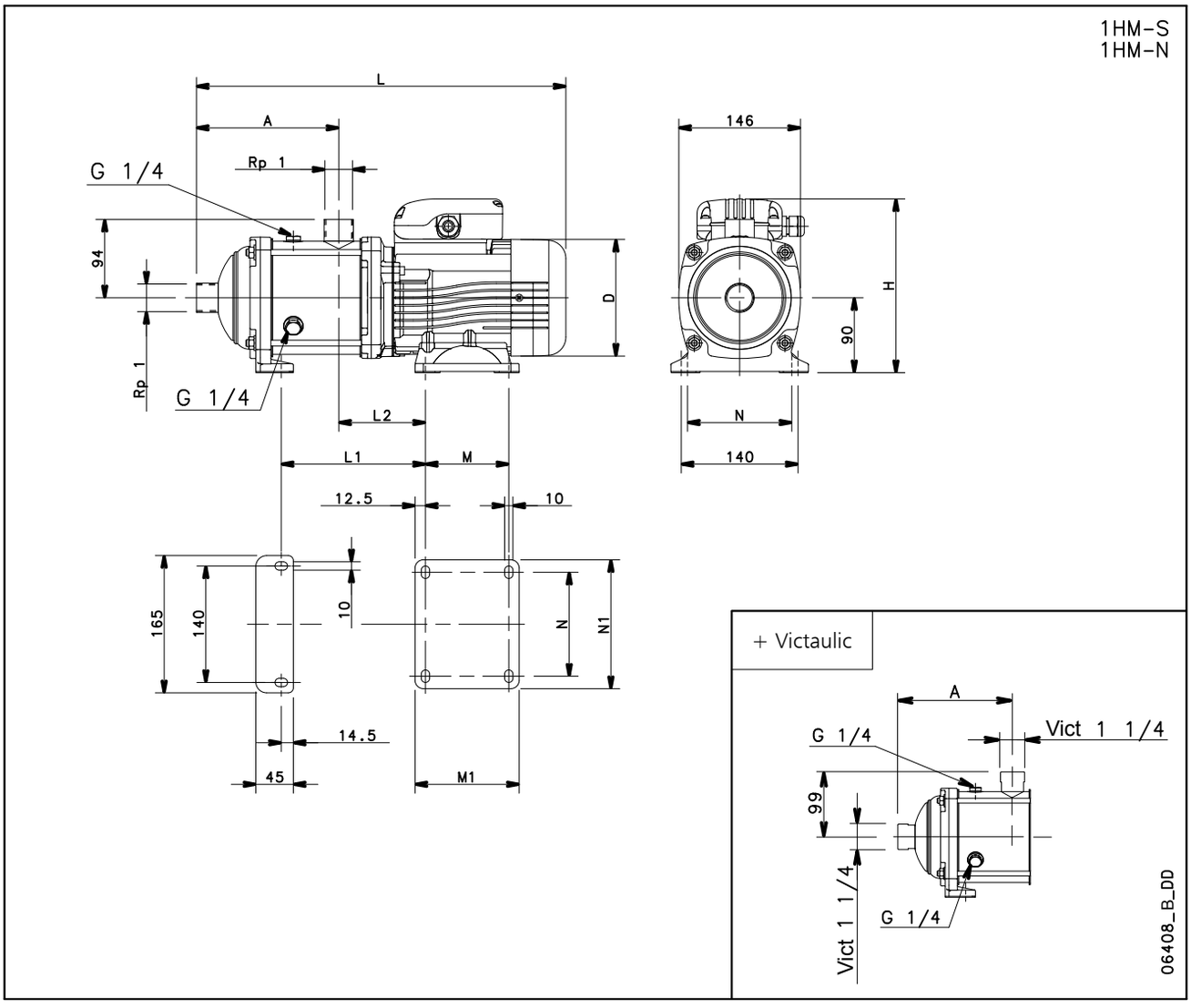

PUMP TYPE	VERSION	MOTOR		DIMENSIONS (mm)										PN	WEIGHT
		kW	SIZE	A	D	H	L	L1	L2	M	M1	N	N1	bar	kg
1HM11	SINGLE-PHASE	0,55	71	231	140	211	504	233	104	100	125	125	155	10	12
1HM12		0,55	71	251	140	211	524	253	104	100	125	125	155	10	12
1HM14		0,75	80	291	155	227	608	293	104	100	125	125	155	10	14
1HM16		0,75	80	331	155	227	648	333	104	100	125	125	155	10	14
1HM18		1,1	80	371	155	227	688	373	104	100	125	125	155	16	17
1HM20		1,1	80	411	155	227	728	413	104	100	125	125	155	16	19
1HM22		1,1	80	451	155	227	768	453	104	100	125	125	155	16	19
1HM25		1,1	80	511	155	227	828	513	104	100	125	125	155	16	21
1HM11	THREE-PHASE	0,55	71	231	140	211	504	233	104	100	125	125	155	10	12
1HM12		0,55	71	251	140	211	524	253	104	100	125	125	155	10	12
1HM14		0,75	80	291	155	219	608	293	104	100	125	125	155	10	14
1HM16		0,75	80	331	155	219	648	333	104	100	125	125	155	10	14
1HM18		1,1	80	371	155	219	688	373	104	100	125	125	155	16	19
1HM20		1,1	80	411	155	219	728	413	104	100	125	125	155	16	20
1HM22		1,1	80	451	155	219	768	453	104	100	125	125	155	16	20
1HM25		1,5	80	511	155	219	828	513	104	100	125	125	155	16	23

You can use the pumps up to PN16 by mounting a mechanical seal PN16.
For mechanical seal, please refer to the TYPE OF SEAL table at page 15.

1hm-s-n-2p50-2-en_c_td

1HM..S - 1HM..N SERIES, (11 TO 25 STAGES)
OPERATING CHARACTERISTICS AT 50 Hz, 2 POLES

1HM..S - 1HM..N	~ 2900 [rpm]	ISO 9906:2012 - Grade 3B

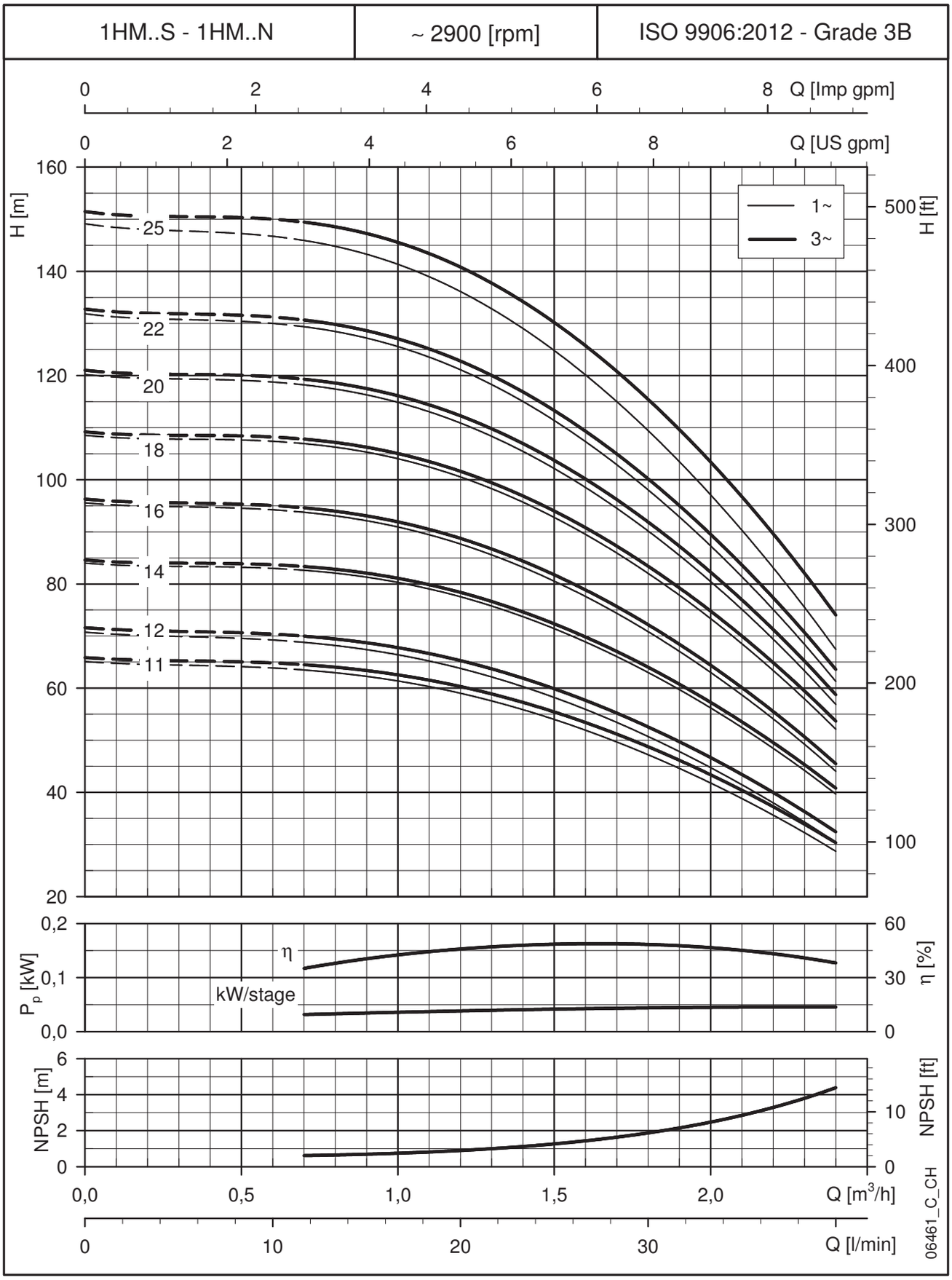

These performances are valid for liquids with density ρ = 1 Kg/dm^3 and kinematic viscosity ν = 1 mm^2/sec.

3HM..S - 3HM..N SERIES, (2 TO 10 STAGES)
DIMENSIONS AND WEIGHTS AT 50 Hz, 2 POLES

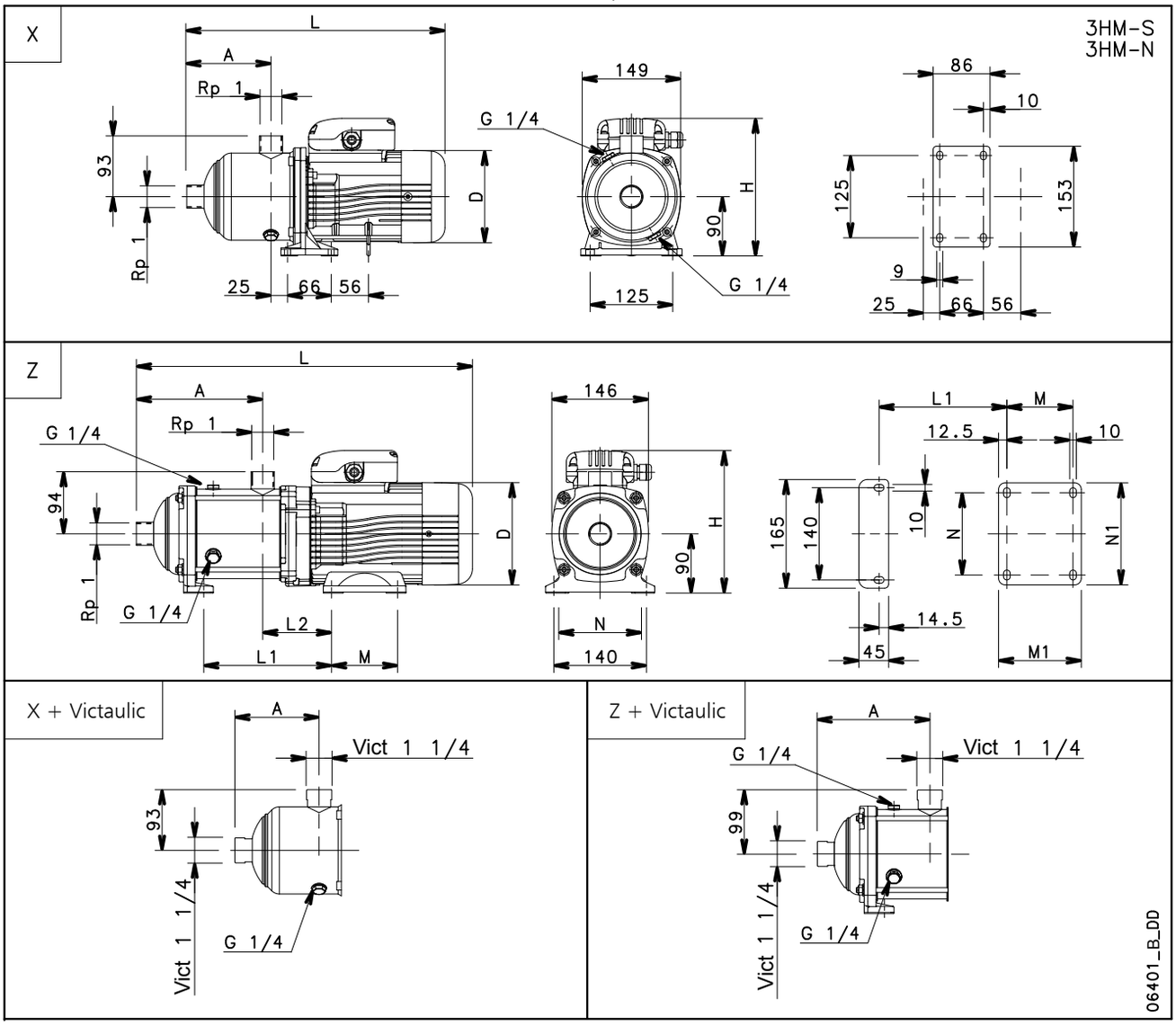

PUMP TYPE	VERSION	Ref.	MOTOR		DIMENSIONS (mm)										PN	WEIGHT
			kW	SIZE	A	D	H	L	L1	L2	M	M1	N	N1	bar	kg
3HM03	SINGLE-PHASE	X	0,40	63	87	120	201	336	-	-	-	-	-	-	10	7
3HM04			0,40	63	107	120	201	356	-	-	-	-	-	-	10	8
3HM05			0,40	63	127	120	201	376	-	-	-	-	-	-	10	8
3HM06			0,55	71	147	140	211	404	-	-	-	-	-	-	10	10
3HM07		Z	0,55	71	151	140	211	424	153	104	100	125	125	155	10	10
3HM08			0,75	80	171	155	227	488	173	104	100	125	125	155	10	12
3HM09			0,75	80	191	155	227	508	193	104	100	125	125	155	10	12
3HM10			1,1	80	211	155	227	528	213	104	100	125	125	155	10	14
3HM02	THREE-PHASE	X	0,30	63	87	120	201	336	-	-	-	-	-	-	10	6
3HM03			0,30	63	87	120	201	336	-	-	-	-	-	-	10	6
3HM04			0,30	63	107	120	201	356	-	-	-	-	-	-	10	7
3HM05			0,40	63	127	120	201	376	-	-	-	-	-	-	10	7
3HM06			0,50	63	147	120	201	396	-	-	-	-	-	-	10	8
3HM07		Z	0,75	80	151	155	219	468	153	104	100	125	125	155	10	14
3HM08			0,75	80	171	155	219	488	173	104	100	125	125	155	10	15
3HM09			1,1	80	191	155	219	508	193	104	100	125	125	155	10	16
3HM10			1,1	80	211	155	219	528	213	104	100	125	125	155	10	16

You can use the pumps up to PN16 by mounting a mechanical seal PN16.
For mechanical seal, please refer to the TYPE OF SEAL table at page 15.

3hm-s-n-2p50-1-en_d_td

3HM..S - 3HM..N SERIES, (2 TO 10 STAGES)
OPERATING CHARACTERISTICS AT 50 Hz, 2 POLES

3HM..S - 3HM..N	~ 2900 [rpm]	ISO 9906:2012 - Grade 3B

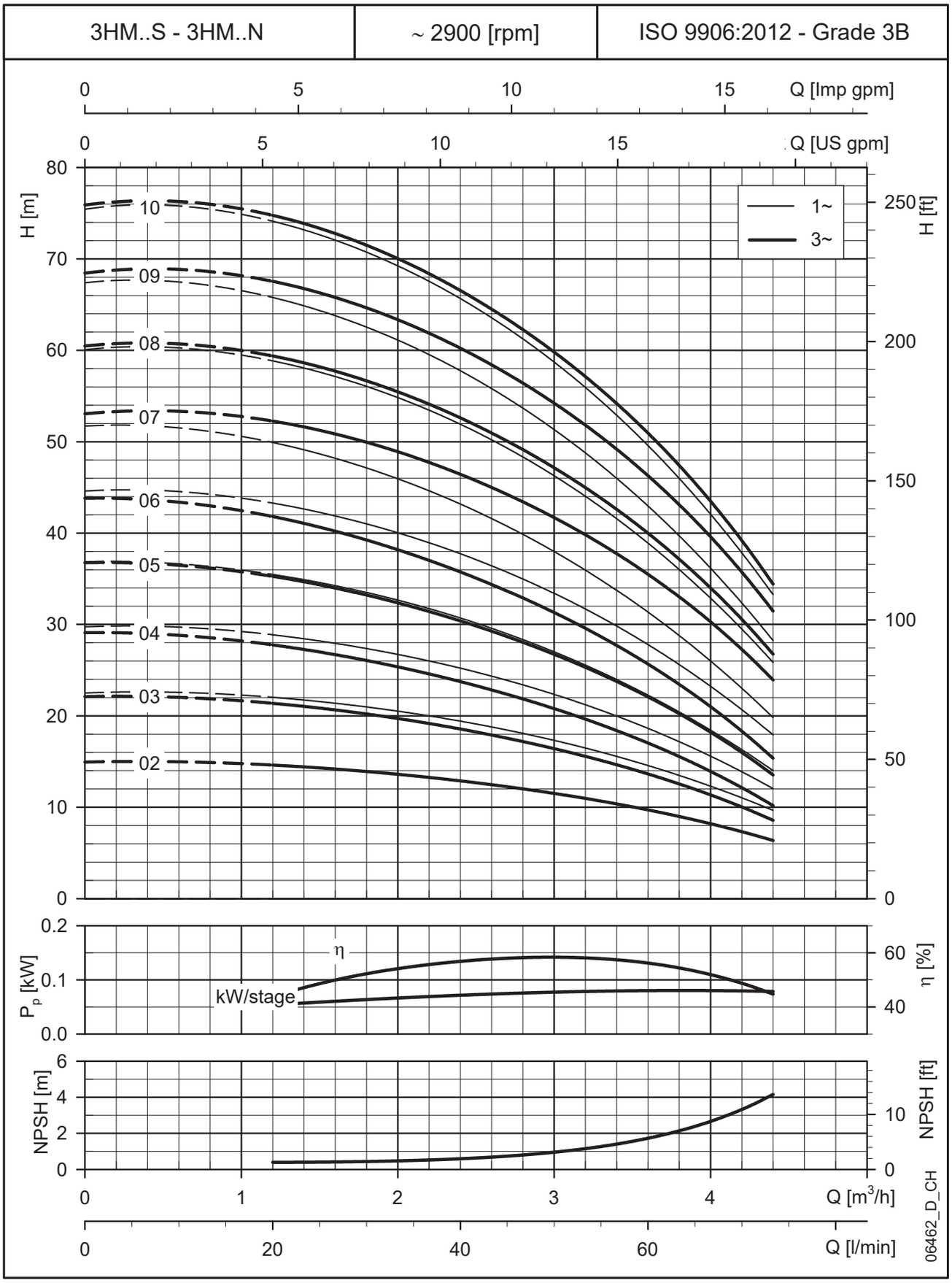

These performances are valid for liquids with density ρ = 1 Kg/dm³ and kinematic viscosity ν = 1 mm²/sec.

3HM..S - 3HM..N SERIES, (11 TO 21 STAGES)
DIMENSIONS AND WEIGHTS AT 50 Hz, 2 POLES

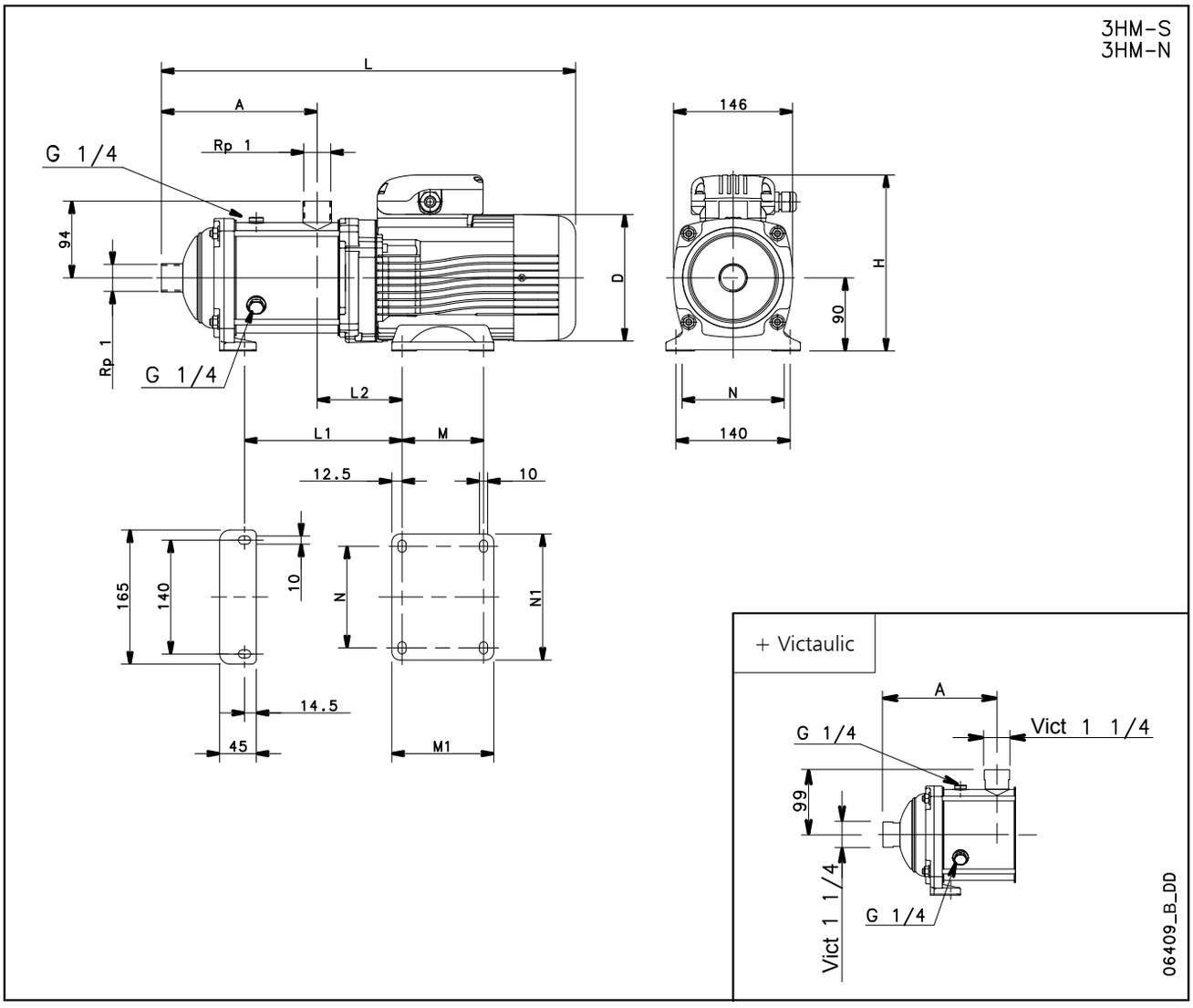

PUMP TYPE	VERSION	MOTOR		DIMENSIONS (mm)										PN	WEIGHT
		kW	SIZE	A	D	H	L	L1	L2	M	M1	N	N1	bar	kg
3HM11	SINGLE-PHASE	1,1	80	231	155	227	548	233	104	100	125	125	155	10	16
3HM12		1,1	80	251	155	227	568	253	104	100	125	125	155	10	16
3HM13		1,1	80	271	155	227	588	273	104	100	125	125	155	10	17
3HM14		1,1	80	291	155	227	608	293	104	100	125	125	155	16	18
3HM16		1,5	90	331	174	249	648	376	127	125	150	140	164	16	31
3HM17		1,5	90	351	174	249	668	396	127	125	150	140	164	16	32
3HM19		1,5	90	391	174	249	708	416	127	125	150	140	164	16	32
3HM11	THREE-PHASE	1,1	80	231	155	219	548	233	104	100	125	125	155	10	17
3HM12		1,1	80	251	155	219	568	253	104	100	125	125	155	10	17
3HM13		1,1	80	271	155	219	588	273	104	100	125	125	155	10	17
3HM14		1,5	80	291	155	219	608	293	104	100	125	125	155	16	19
3HM16		1,5	80	331	155	219	648	333	104	100	125	125	155	16	19
3HM17		1,5	80	351	155	219	668	353	104	100	125	125	155	16	20
3HM19		2,2	90	391	174	224	764	416	127	125	150	140	164	16	25
3HM21		2,2	90	431	174	224	804	456	127	125	150	140	164	16	26

You can use the pumps up to PN16 by mounting a mechanical seal PN16.
For mechanical seal, please refer to the TYPE OF SEAL table at page 15.

3hm-s-n-2p50-2-en_c_td

3HM..S - 3HM..N SERIES, (11 TO 21 STAGES)
OPERATING CHARACTERISTICS AT 50 Hz, 2 POLES

3HM..S - 3HM..N	~ 2900 [rpm]	ISO 9906:2012 - Grade 3B

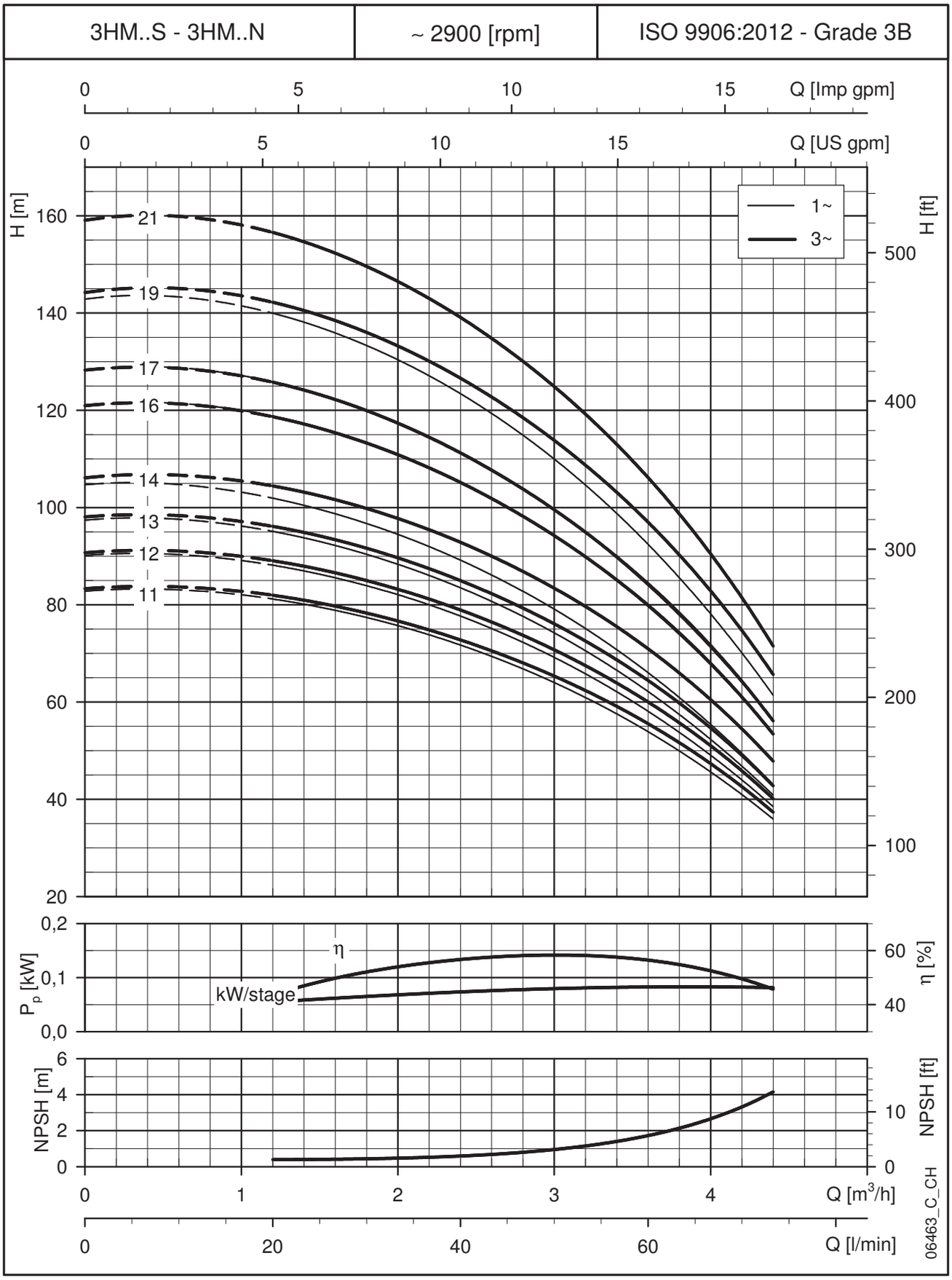

These performances are valid for liquids with density ρ = 1 Kg/dm³ and kinematic viscosity ν = 1 mm²/sec.

5HM..S - 5HM..N SERIES, (2 TO 9 STAGES)
DIMENSIONS AND WEIGHTS AT 50 Hz, 2 POLES

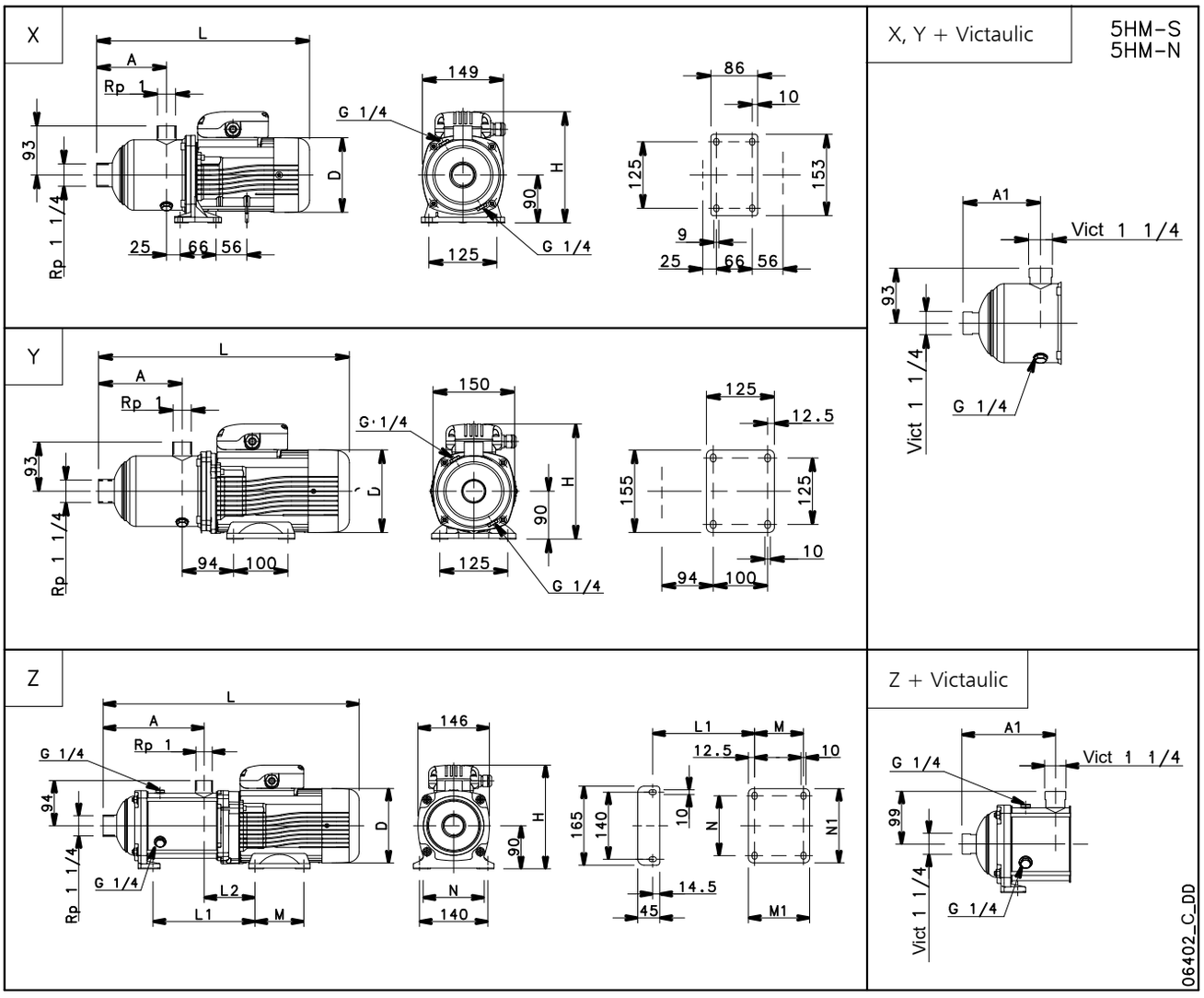

PUMP TYPE	VERSION	Ref.	MOTOR		DIMENSIONS (mm)												PN	WEIGHT
			kW	SIZE	A	A1	D	H	L	L1	L2	M	M1	N	N1		bar	kg
5HM02	SINGLE-PHASE	X	0,40	63	104	102	120	201	353	-	-	-	-	-	-		10	7
5HM03			0,40	63	104	102	120	201	353	-	-	-	-	-	-		10	7
5HM04			0,55	71	129	127	140	211	386	-	-	-	-	-	-		10	10
5HM05			0,75	80	154	152	155	227	461	-	-	-	-	-	-		10	10
5HM06		Z	0,75	80	158	156	155	227	474	158	104	100	125	125	155		10	11
5HM07			1,1	80	183	181	155	227	499	183	104	100	125	125	155		10	15
5HM08			1,1	80	208	206	155	227	524	208	104	100	125	125	155		10	15
5HM09			1,1	80	233	231	155	227	550	233	104	100	125	125	155		10	17

5HM02	THREE-PHASE	X	0,30	63	104	102	120	201	353	-	-	-	-	-	-		10	6
5HM03			0,40	63	104	102	120	201	353	-	-	-	-	-	-		10	7
5HM04			0,50	63	129	127	120	201	378	-	-	-	-	-	-		10	8
5HM05		Y	0,75	80	154	152	155	219	462	-	-	-	-	-	-		10	13
5HM06		Z	1,1	80	158	156	155	219	475	158	104	100	125	125	155		10	15
5HM07			1,1	80	183	181	155	219	500	183	104	100	125	125	155		10	16
5HM08			1,1	80	208	206	155	219	525	208	104	100	125	125	155		10	16
5HM09			1,5	80	233	231	155	219	550	233	104	100	125	125	155		10	18

You can use the pumps up to PN16 by mounting a mechanical seal PN16.
For mechanical seal, please refer to the TYPE OF SEAL table at page 15.

5hm-s-n-2p50-1-en f td

5HM..S - 5HM..N SERIES, (2 TO 9 STAGES)
OPERATING CHARACTERISTICS AT 50 Hz, 2 POLES

5HM..S - 5HM..N	~ 2900 [rpm]	ISO 9906:2012 - Grade 3B

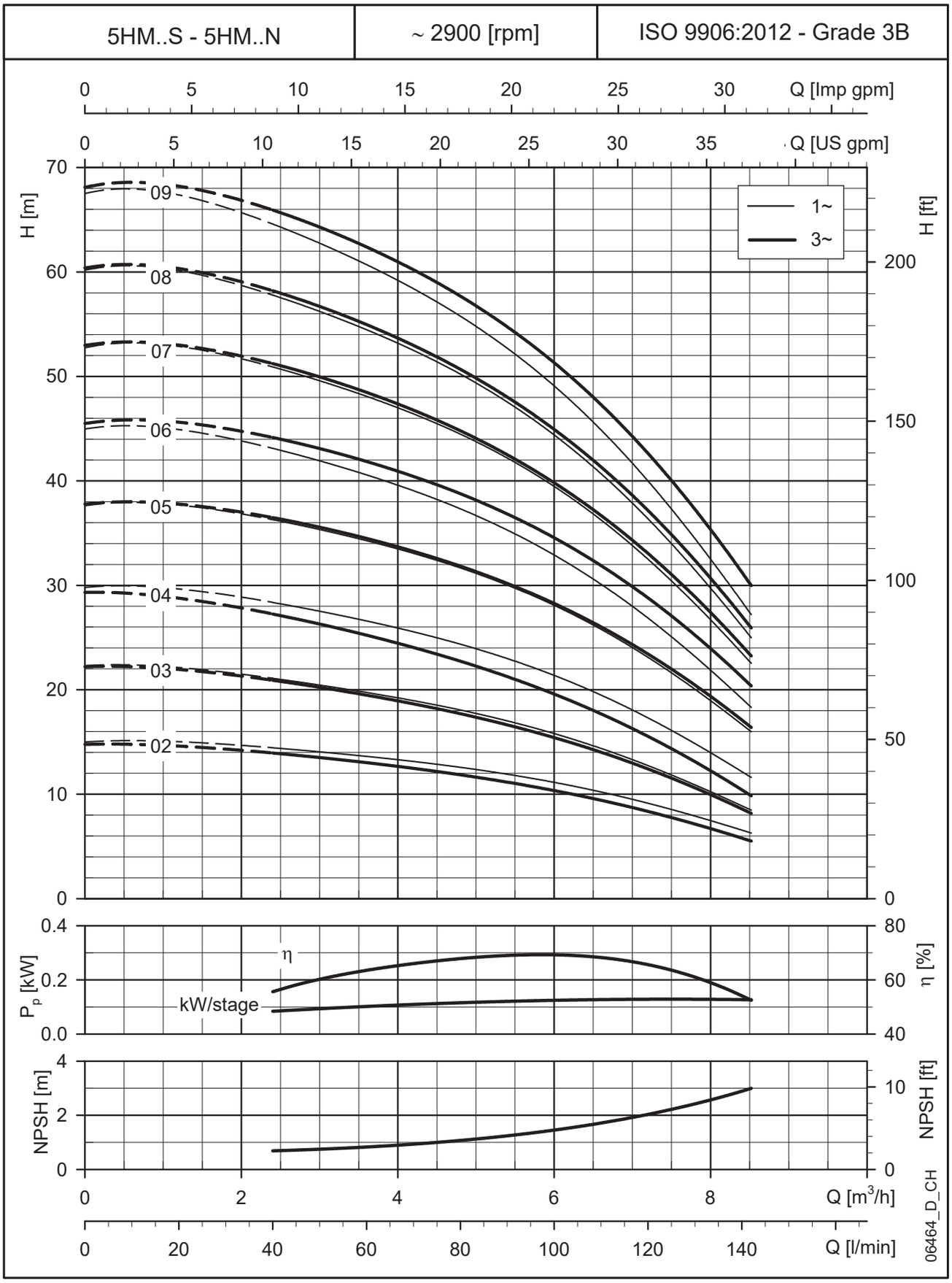

These performances are valid for liquids with density ρ = 1 Kg/dm³ and kinematic viscosity ν = 1 mm²/sec.

5HM..S - 5HM..N SERIES, (10 TO 21 STAGES)
DIMENSIONS AND WEIGHTS AT 50 Hz, 2 POLES

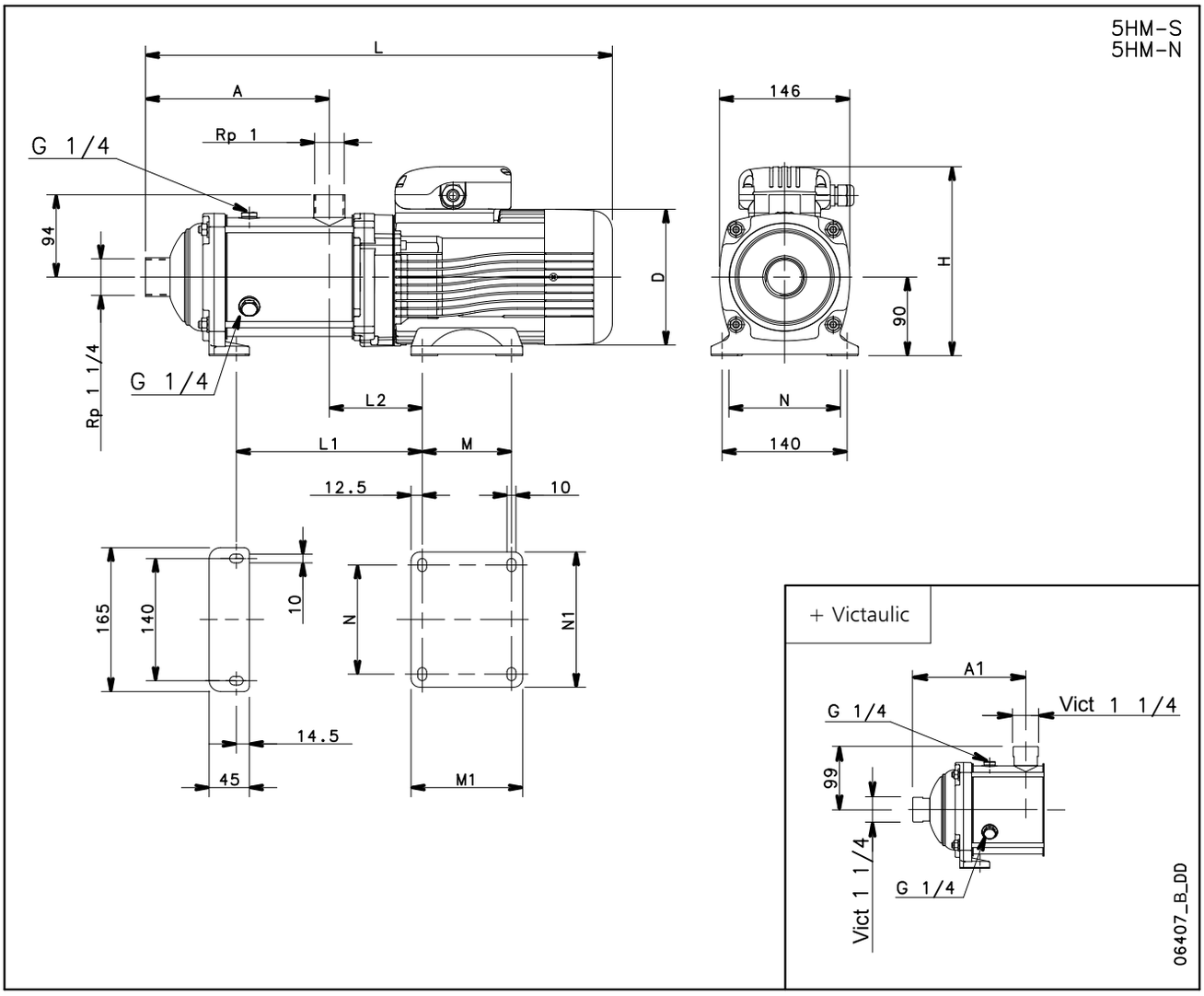

PUMP TYPE	VERSION	MOTOR		DIMENSIONS (mm)											PN	WEIGHT
		kW	SIZE	A	A1	D	H	L	L1	L2	M	M1	N	N1	bar	kg
5HM10	SINGLE-PHASE	1,5	90	258	256	174	249	631	281	127	125	150	140	164	10	30
5HM11		1,5	90	283	281	174	249	656	306	127	125	150	140	164	10	30
5HM12		1,5	90	308	306	174	249	681	331	127	125	150	140	164	10	31
5HM10	THREE-PHASE	1,5	80	258	256	155	227	575	258	104	100	125	125	155	10	18
5HM11		1,5	80	283	281	155	227	600	283	104	100	125	125	155	10	19
5HM12		2,2	90	308	306	174	224	681	308	127	125	150	140	164	10	24
5HM13		2,2	90	333	331	174	224	706	356	127	125	150	140	164	10	24
5HM14		2,2	90	358	356	174	224	731	381	127	125	150	140	164	16	25
5HM15		2,2	90	383	381	174	224	756	406	127	125	150	140	164	16	25
5HM17		3	90	433	431	174	224	806	456	127	125	150	140	164	16	29
5HM19		3	90	483	481	174	224	856	506	127	125	150	140	164	16	30
5HM21		3	90	533	531	174	224	906	556	127	125	150	140	164	16	31

5hm-s-n-2p50-2-en_d_td

You can use the pumps up to PN16 by mounting a mechanical seal PN16.
For mechanical seal, please refer to the TYPE OF SEAL table at page 15.

5HM..S - 5HM..N SERIES, (10 TO 21 STAGES)
OPERATING CHARACTERISTICS AT 50 Hz, 2 POLES

5HM..S - 5HM..N	~ 2900 [rpm]	ISO 9906:2012 - Grade 3B

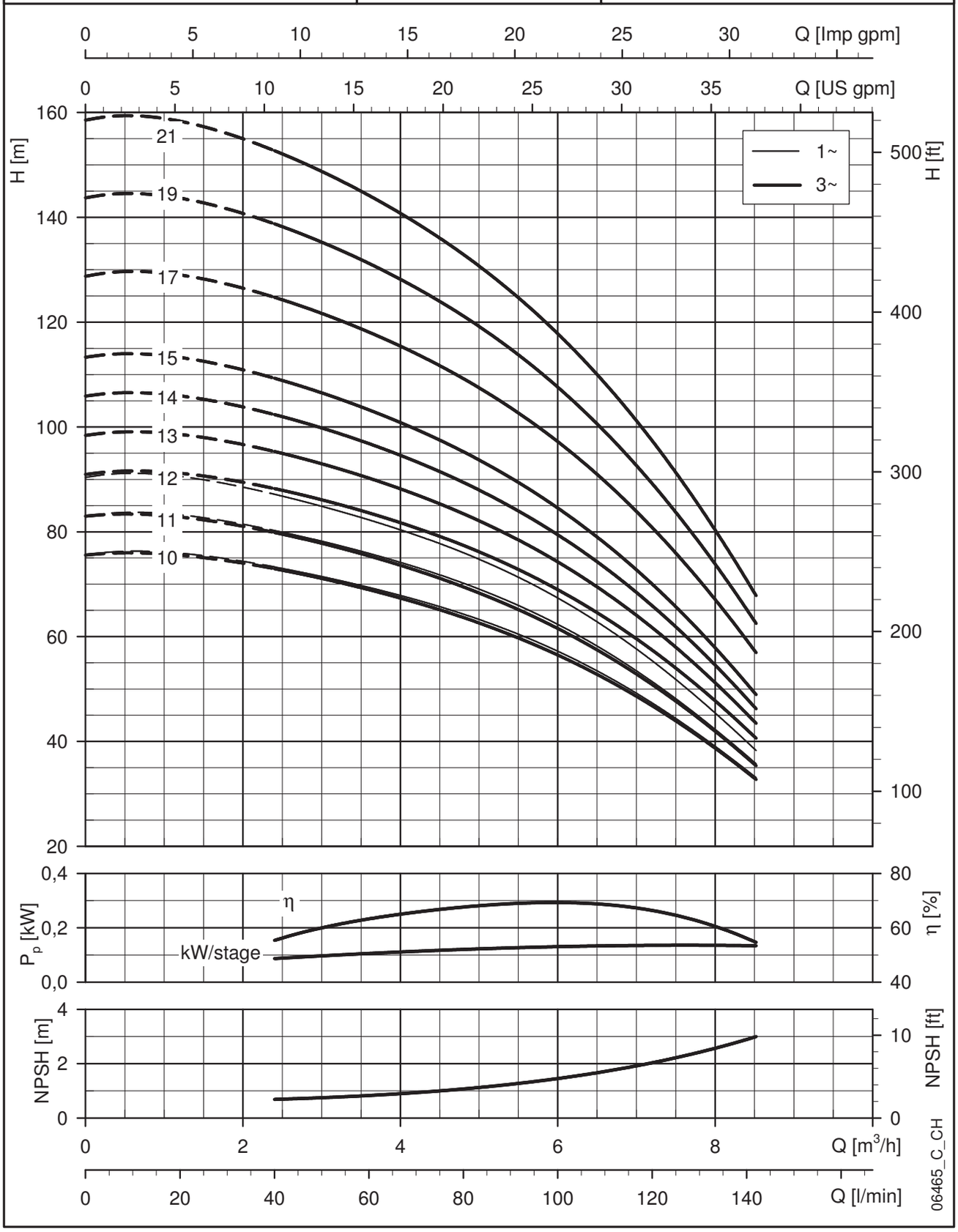

These performances are valid for liquids with density ρ = 1 Kg/dm³ and kinematic viscosity ν = 1 mm²/sec.

10HM..S - 10HM..N SERIES
DIMENSIONS AND WEIGHTS AT 50 Hz, 2 POLES

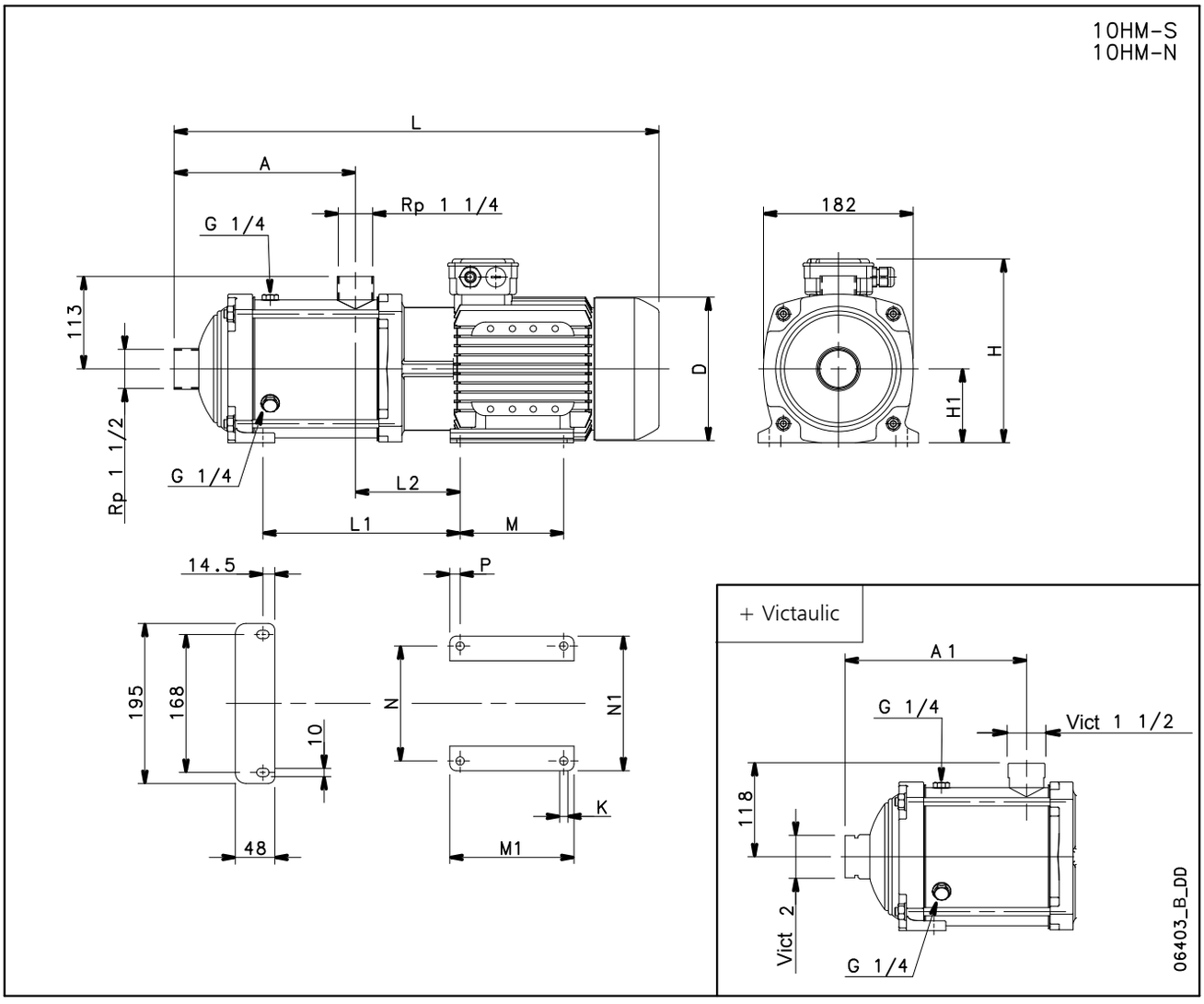

PUMP TYPE	VERSION	MOTOR		DIMENSIONS (mm)															PN	WEIGHT
		kW	SIZE	A	A1	D	H	H1	L	L1	L2	M	M1	N	N1	P	K		bar	kg
10HM02	SINGLE-PHASE	1,1	80	125	137	155	227	90	443	122	105	100	125	125	155	12,5	10		10	13
10HM03		1,1	80	125	137	155	227	90	443	122	105	100	125	125	155	12,5	10		10	17
10HM04		1,5	90	157	169	174	249	90	531	176	128	125	150	140	164	12,5	10		10	31
10HM02	THREE-PHASE	0,75	80	125	137	155	219	90	443	122	105	100	125	125	155	12,5	10		10	16
10HM03		1,1	80	125	137	155	219	90	443	122	105	100	125	125	155	12,5	10		10	17
10HM04		1,5	80	157	169	155	219	90	475	154	105	100	125	125	155	12,5	10		10	19
10HM05		2,2	90	189	201	174	224	90	563	208	128	125	150	140	164	12,5	10		10	25
10HM06		2,2	90	221	233	174	224	90	595	240	128	125	150	140	164	12,5	10		10	26
10HM07		3	90	253	265	174	224	90	627	272	128	125	150	140	164	12,5	10		10	30
10HM08		3	90	285	297	174	224	90	659	304	128	125	150	140	164	12,5	10		10	31
10HM09		4	100	317	329	197	254	100	720	356	147	140	170	160	184	15	12		16	38
10HM10		4	100	349	361	197	254	100	752	388	147	140	170	160	184	15	12		16	39
10HM11		4	100	381	393	197	254	100	784	420	147	140	170	160	184	15	12		16	40
10HM12		5,5	112	413	425	214	280	112	850	459	154	140	170	190	219	15	12		16	48
10HM13		5,5	112	445	457	214	280	112	882	491	154	140	170	190	219	15	12		16	49

10hm-s-n-2p50-en_d_td

You can use the pumps up to PN16 by mounting a mechanical seal PN16.
For mechanical seal, please refer to the TYPE OF SEAL table at page 15.

10HM..S - 10HM..N SERIES
OPERATING CHARACTERISTICS AT 50 Hz, 2 POLES

10HM..S - 10HM..N	~ 2900 [rpm]	ISO 9906:2012 - Grade 3B

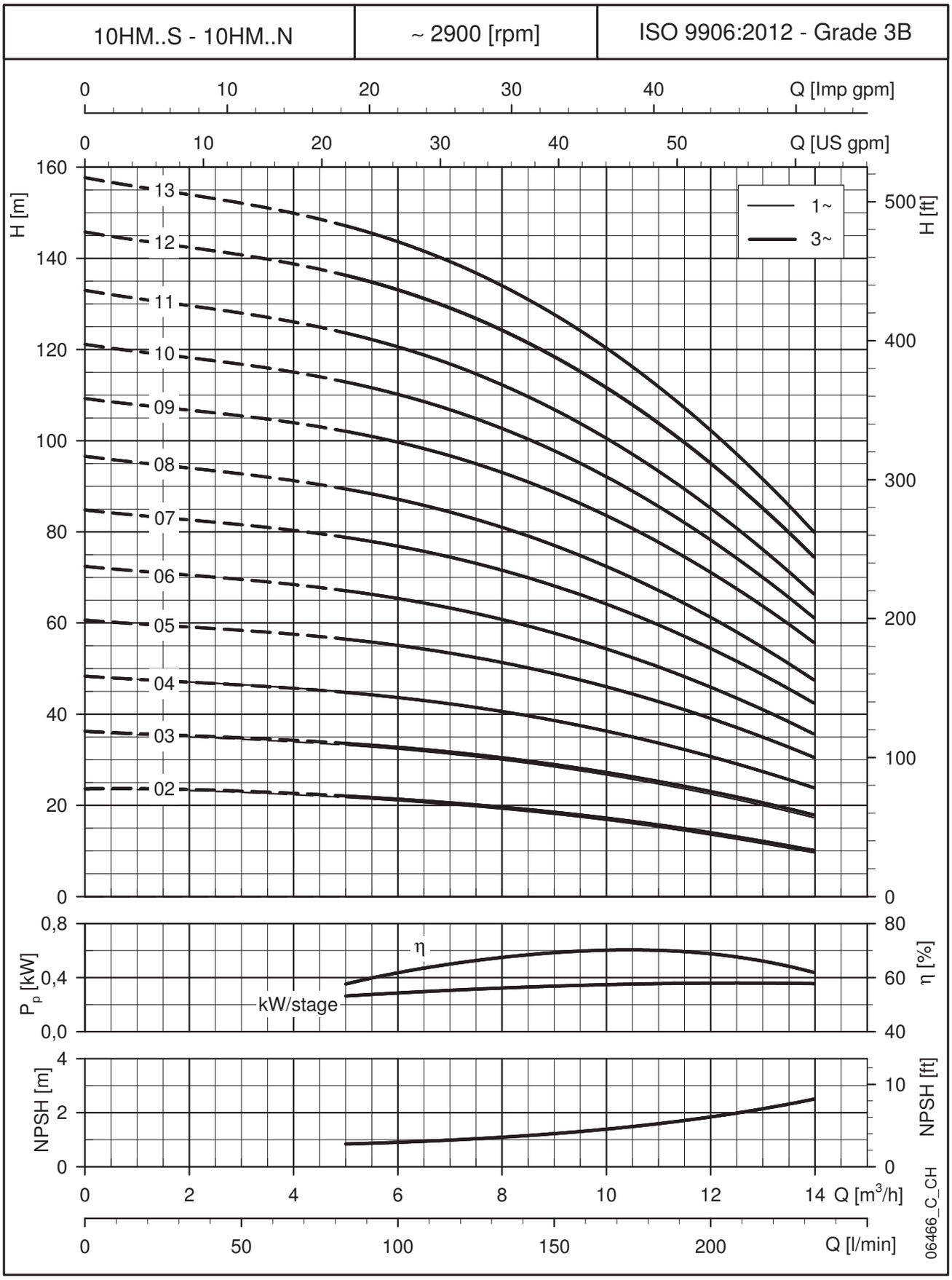

These performances are valid for liquids with density ρ = 1 Kg/dm³ and kinematic viscosity ν = 1 mm²/sec.

15HM..S - 15HM..N SERIES
DIMENSIONS AND WEIGHTS AT 50 Hz, 2 POLES

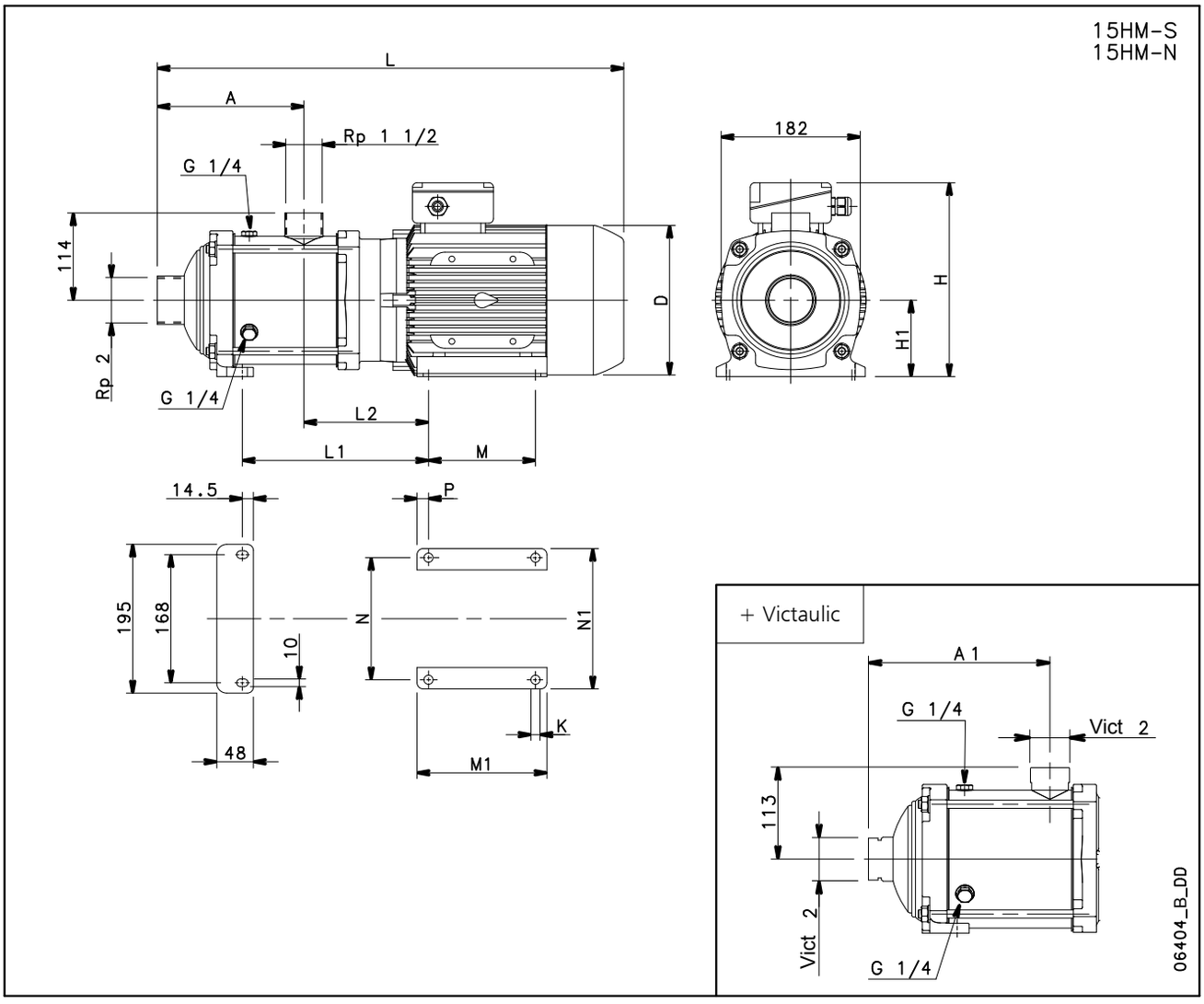

POMPA TIPO	VERSIONE	MOTORE		DIMENSIONI (mm)														PN	PESO
		kW	Grand.	A	A1	D	H	H1	L	L1	L2	M	M1	N	N1	P	K	bar	kg
15HM02	MONO FASE	1,5	90	144	153	174	249	90	534	128	144	125	150	140	164	12,5	10	10	30
15HM02	TRIFASE	1,5	80	144	153	155	219	90	478	154	121	100	125	125	155	12,5	10	10	18
15HM03		2,2	90	144	153	174	224	90	534	176	144	125	150	140	164	12,5	10	10	23
15HM04		3	90	192	201	174	224	90	582	224	144	125	150	140	164	12,5	10	10	27
15HM05		4	100	240	249	197	254	100	659	292	163	140	170	160	184	15	12	10	35
15HM06		5,5	112	288	297	214	280	112	741	347	170	140	170	190	219	15	12	10	43
15HM07		5,5	112	336	345	214	280	112	789	395	170	140	170	190	219	15	12	10	44

15hm-s-n-2p50_d_td

You can use the pumps up to PN16 by mounting a mechanical seal PN16.
For mechanical seal, please refer to the TYPE OF SEAL table at page 15.

15HM..S - 15HM..N SERIES
OPERATING CHARACTERISTICS AT 50 Hz, 2 POLES

15HM..S - 15HM..N	~ 2900 [rpm]	ISO 9906:2012 - Grade 3B

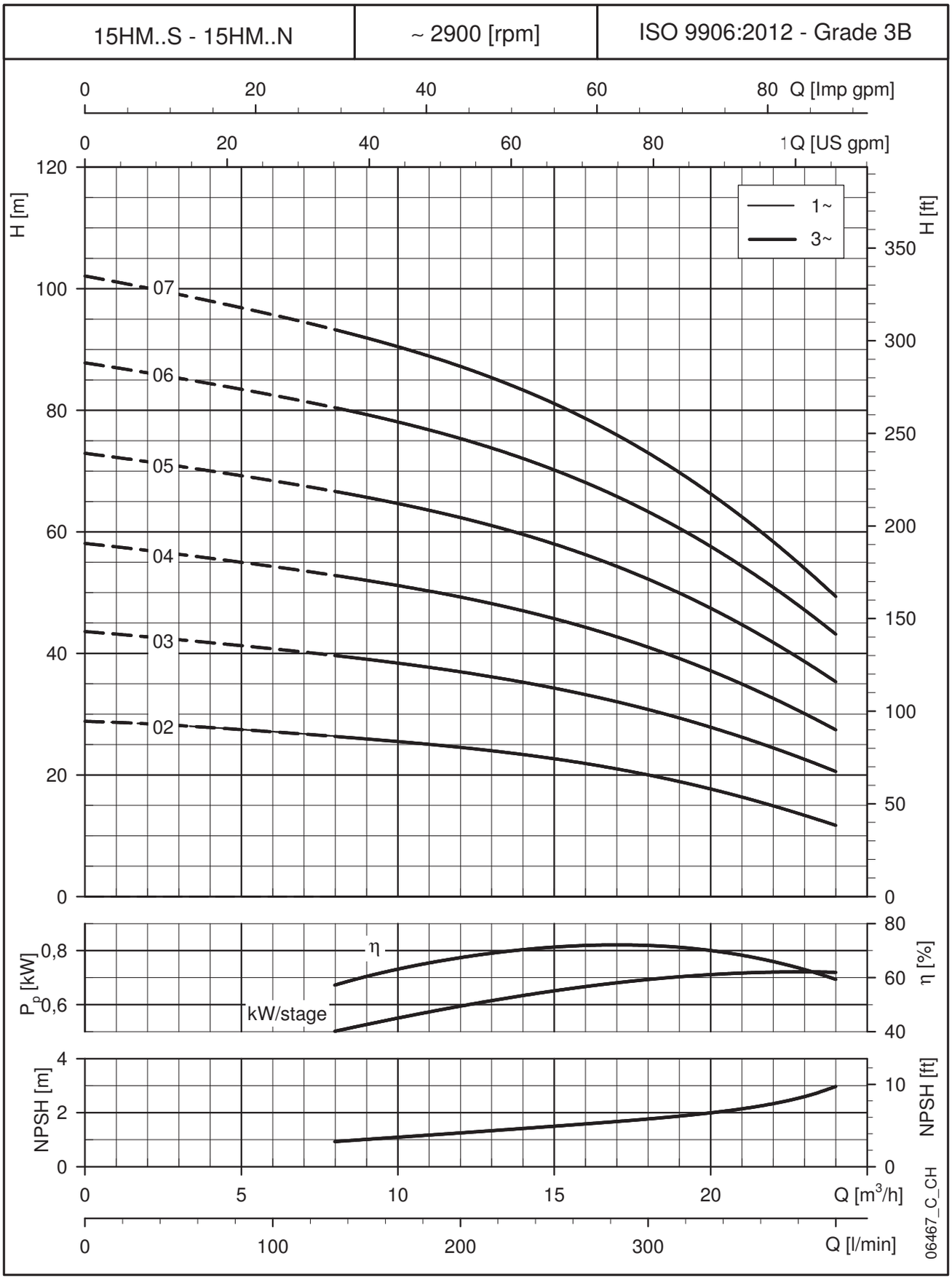

These performances are valid for liquids with density ρ = 1 Kg/dm³ and kinematic viscosity ν = 1 mm²/sec.

22HM..S - 22HM..N SERIES
DIMENSIONS AND WEIGHTS AT 50 Hz, 2 POLES

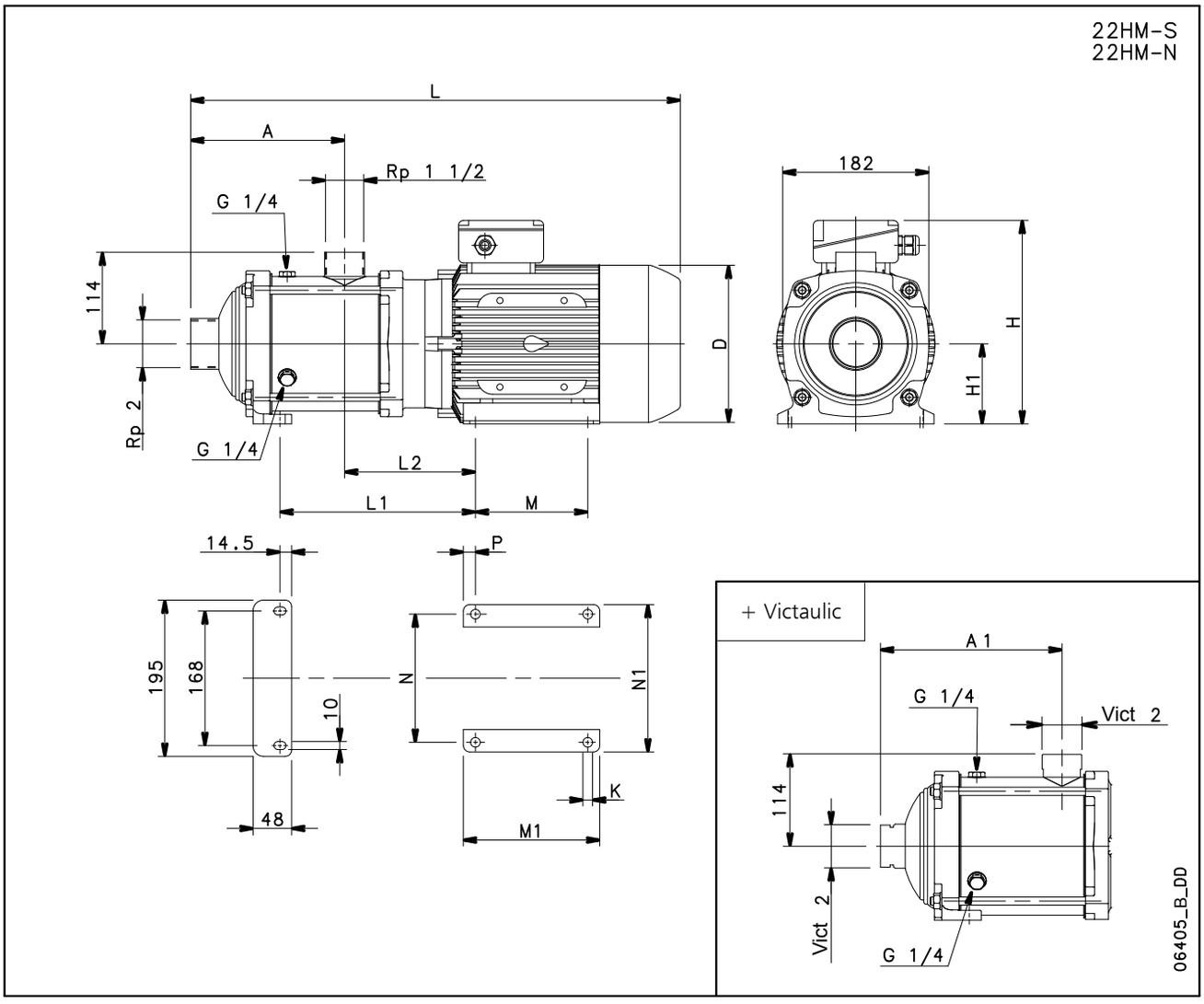

PUMP TYPE	VERSION	MOTOR		DIMENSIONS (mm)														PN	WEIGHT
		kW	SIZE	A	A1	D	H	H1	L	L1	L2	M	M1	N	N1	P	K	bar	kg
22HM02	THREE-PHASE	2,2	90	144	153	174	224	90	534	176	144	125	150	140	164	12,5	10	10	23
22HM03		3	90	144	153	174	224	90	534	176	144	125	150	140	164	12,5	10	10	26
22HM04		4	100	192	201	197	254	100	611	244	163	140	170	160	184	15	12	10	33
22HM05		5,5	112	240	249	214	280	112	693	299	170	140	170	190	219	15	12	10	42

22hm-s-n-2p50-en_d_td

You can use the pumps up to PN16 by mounting a mechanical seal PN16.
For mechanical seal, please refer to the TYPE OF SEAL table at page 15.

22HM..S - 22HM..N SERIES
OPERATING CHARACTERISTICS AT 50 Hz, 2 POLES

22HM..S - 22HM..N	~ 2900 [rpm]	ISO 9906:2012 - Grade 3B

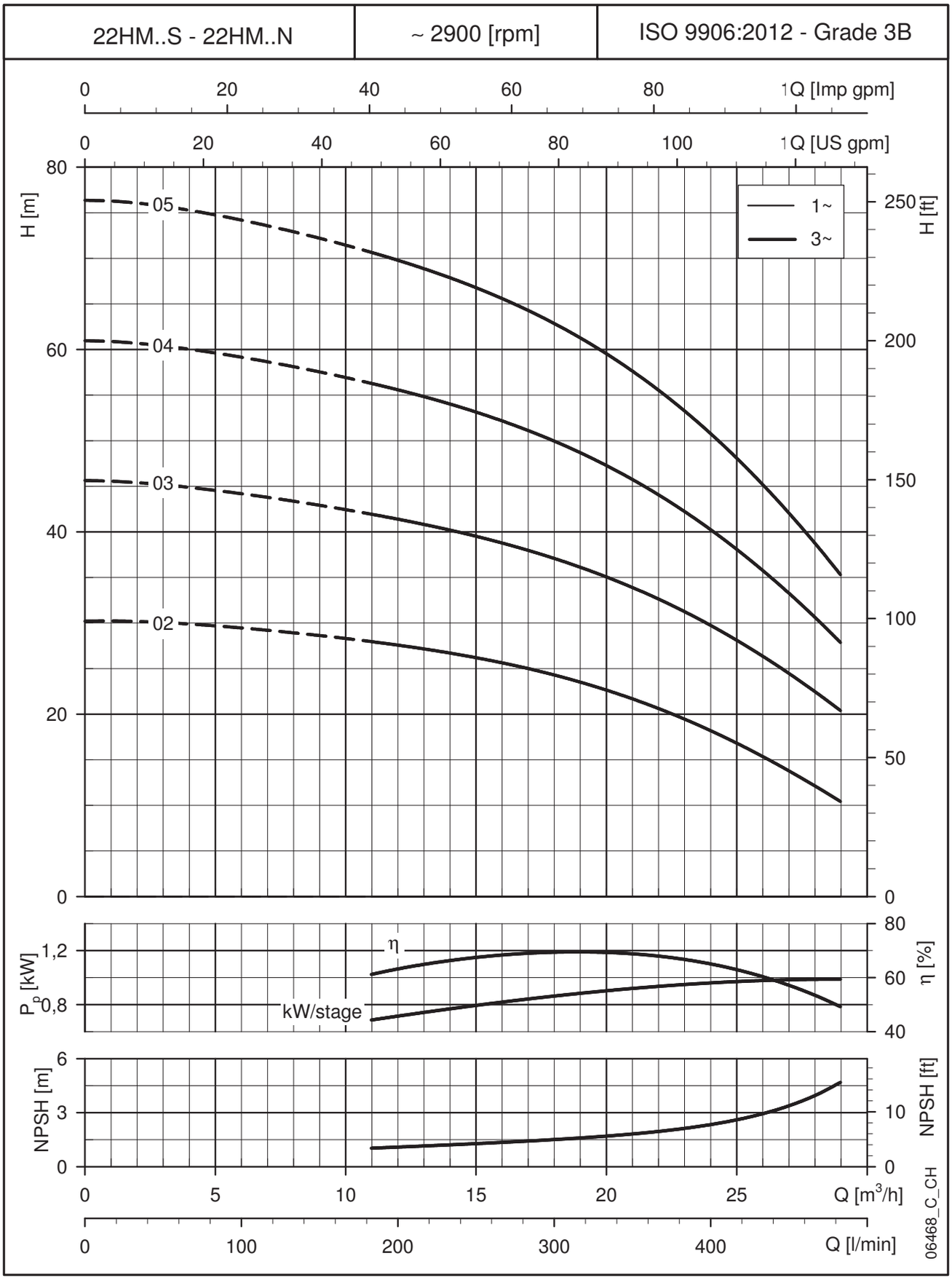

These performances are valid for liquids with density ρ = 1 Kg/dm³ and kinematic viscosity ν = 1 mm²/sec.

e-HME:
VERSION WITH DRIVE AND PERMANENT MAGNET MOTOR (e-SM DRIVE)

e-HME SERIES
(e-HM SMART)

Background and context

In every sector, from construction and industry to agriculture and building services the need for intelligent, compact and high-efficiency pumping systems is constantly growing.
That's why Lowara has developed the e-HME series: an integrated intelligent pumping system with electronically driven, permanent magnet motor (IE5 efficiency level).
The integrated control system, combined with the high performance, power and efficiency from the motor and hydraulics, guarantees impressively low operating costs. You also benefit from flexibility, precision and its ultra-compact size.

Savings
The electronics and permanent magnet motor are highly efficient and minimize power losses while transferring maximum energy to the hydraulic parts of the pump.
The refined control system with integrated microprocessor adjusts the motor speed, matching the required operating point of the pump or system requirements.
This reduces demand on electricity according to the required working conditions.
This creates economies, especially in systems where pump demand varies over time.

Flexibility
The compact size, low loss and increased control make the e-HM Smart series a good choice in applications and systems where fixed speed pumps are commonly used. The e-HM Smart series is easy to integrate in control and regulation loops thanks to the wide availability of compatible communication protocols, including analog and digital inputs.
The pump is supplied with a pressure sensor.

Ease of use and commissioning
e-HM Smart has an intuitive interface that guides the user through the installation, and a practical area to assist with connections.
The control system is integrated and no additional external electrical panel is required.

Application sectors

- Water supply systems in residential buildings
- Air conditioning
- Water treatment plants
- Industrial installations



e-SM System

- Single phase power supply: 208-240 V +/- 10%, 50/60 Hz
- Three-phase power supply:

- from 0,37 kW to 1,5 kW:
  208-240 / 380-460 V +/- 10%, 50/60 Hz
- 2,2 kW: 380-460 V +/- 10%, 50/60 Hz

- Power up to 2,2 kW
- Protection class IP 55
- Can be linked up to 3 e-HM Smart pumps

Pump

- Flow rate: up to 29 m^3/h
- Head: up to 158 m
- Temperature of pumped liquid: up to +120°C
- Maximum operating pressure 16 bar (PN 16)
- The hydraulic performances meet the tolerances specified in ISO 9906:2012

Motor

- IE5 efficiency level (IEC TS 60034-30-2:2016)
- Synchronous electric motor with permanent magnets, (TEFC), closed structure, air-cooled
- Insulation class 155 (F)
- Environment temperature: -20°C to +50°C with no performance derating
- Overload protection and locked rotor with automatic reset incorporated

Regulations (EU) 2019/1781 e 2021/341 Annex I – point 4

(Product information)
The requirements shall not apply to these variable speed drives, as they are integrated to permanent magnet motors, that aren't covered by the same regulations.

e-HME SERIES
(e-HM SMART)

e-HM Smart series is equipped with an intelligent control that optimizes hydraulic performance while minimizing waste.

Integrated intelligence: The electronic control of the motor enables a 20% increase in performance compared to an equivalent fixed speed pump (area highlighted in figure "Integrated intelligence").

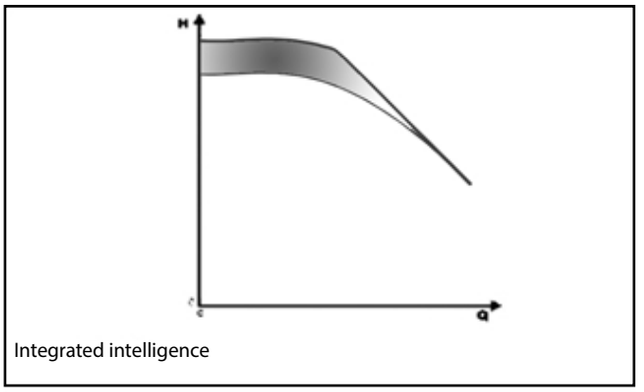

Integrated intelligence

Adjustment: This is possible both at constant pressure and according to the characteristic curve of the system, based on the customer's preferences.
Another option is according to an external signal or at a preset speed.

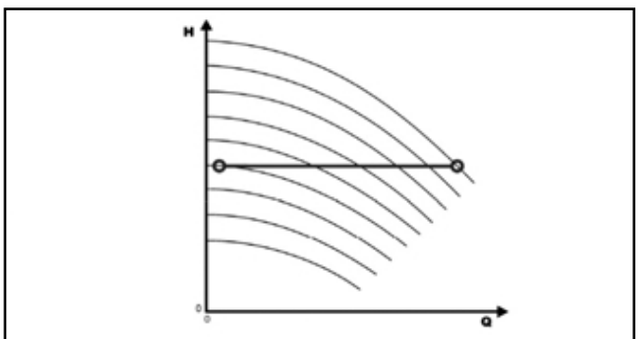

Control for constant pressure

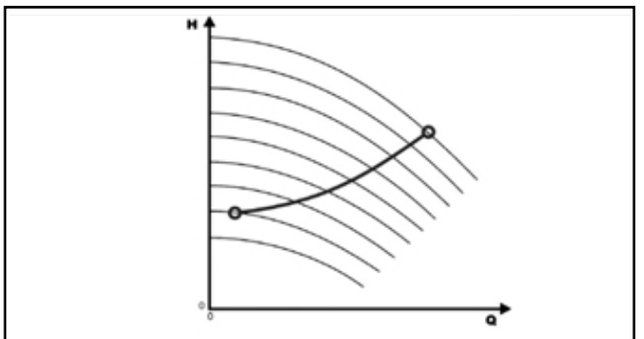

Control to match a system curve

Intuitive and simple interface: You can control the unit from just three buttons, with an easy to read display for parameters and alarms, designed for complete control of system operation.

1. Communication LED
2. Power on LED
3. Unit of measure LED
4. Speed LED bar
5. Status LED
6. Numeric display
7. Decrease key
8. On/off and menu key
9. Increase key

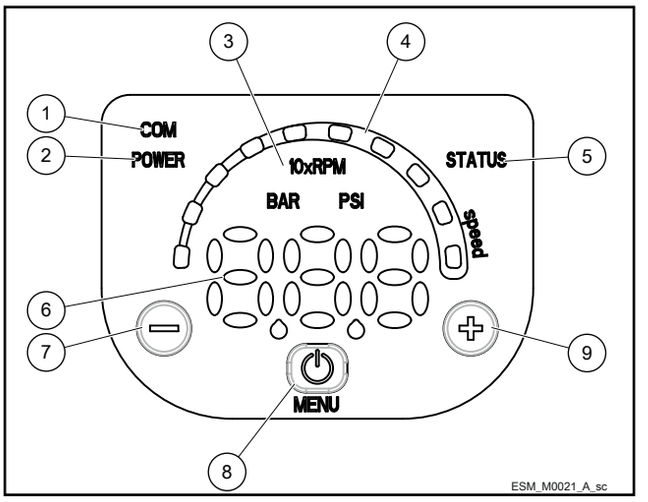

e-HME SERIES
SINGLE PHASE TERMINAL BLOCK

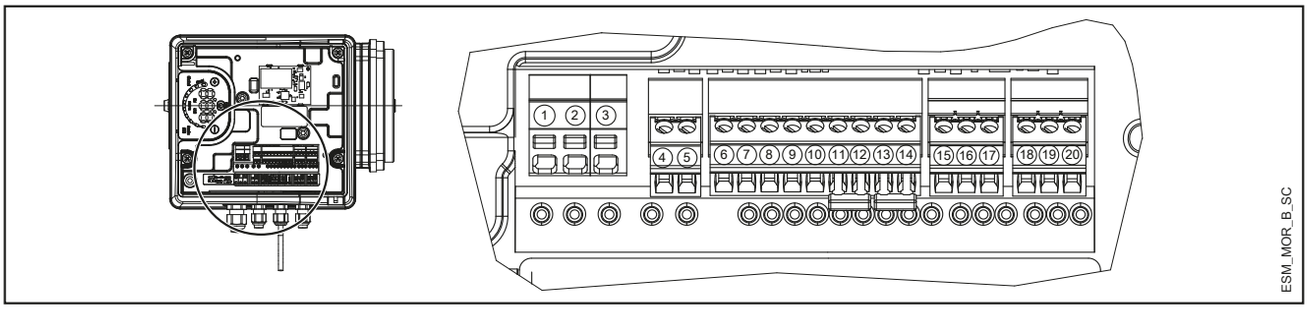

REF.	ITEM	DESCRIPTION
4	Fault Signal	COM - error status relay
5		NO - error status relay
6	Auxiliary Voltage Supply	Auxiliary voltage supply +15 VDC
7	Analog input 0-10V	Actuator mode 0-10 V input
8		GND for 0-10 V input
9	External Pressure sensor [also Differential]	Power supply external sensor +15 VDC
10		External sensor 4-20 mA input
11	External Start/Stop	External ON/OFF input reference
12		External ON/OFF input
13	External Lack of Water	Low water input
14		Low water reference
15	Communication bus	RS485 port 1: RS485-1N B (-)
16		RS485 port 1: RS485-1P A (+)
17		Electronic GND
18	Communication bus	RS485 port 2: RS485 port 2: RS485-2N B (-) active only with optional module
19		RS485 port 2: RS485 port 2: RS485-2P A (+) active only with optional module
20		Electronic GND

MorsM-en_a_sc

THREE-PHASE TERMINAL BLOCK

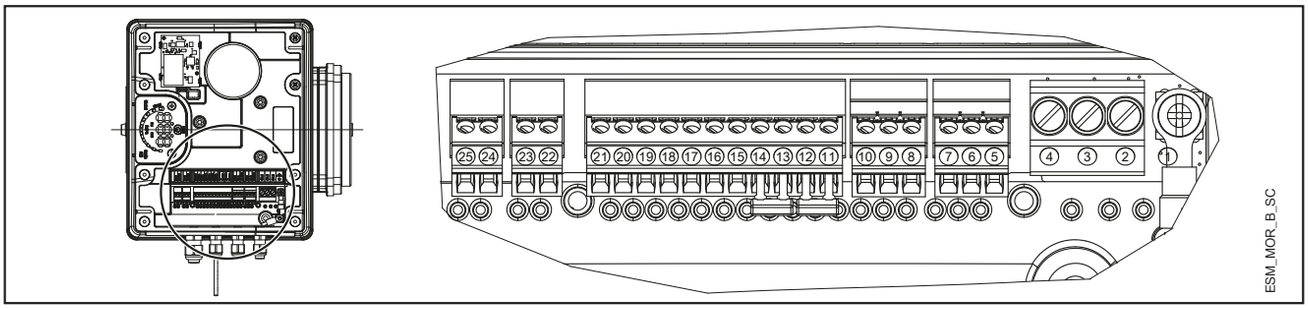

REF.	ITEM	DESCRIPTION
5	Communication bus	Electronic GND
6		RS485 port 1: RS485-1P A (+)
7		RS485 port 1: RS485-1N B (-)
8	Communication bus	Electronic GND
9		RS485 port 2: RS485 port 2: RS485-2P A (+) active only with optional module
10		RS485 port 2: RS485 port 2: RS485-2N B (-) active only with optional module
11	External Lack of Water	Low water reference
12		Low water input
13	External Start/Stop	External ON/OFF input reference
14		External ON/OFF input
15	External Pressure sensor	External sensor 4-20 mA input
16		Power supply external sensor +15 VDC
17	External Pressure sensor [also Differential]	External sensor 4-20 mA input
18		Power supply external sensor +15 VDC
19	Analog input 0-10V	GND for 0-10 V input
20		Actuator mode 0-10 V input
21	Auxiliary Voltage Supply	Auxiliary voltage supply +15 VDC
22	Motor running signal	Normally open contact
23		Common contact
24	Fault Signal	NO - error status relay
25		COM - error status relay

MorsT-en_a_sc

e-HME SERIES
HOW TO READ SMART PUMP SERIES CURVES

To exploit to the maximum potential of Smart Pumps it's important to properly read working curves:

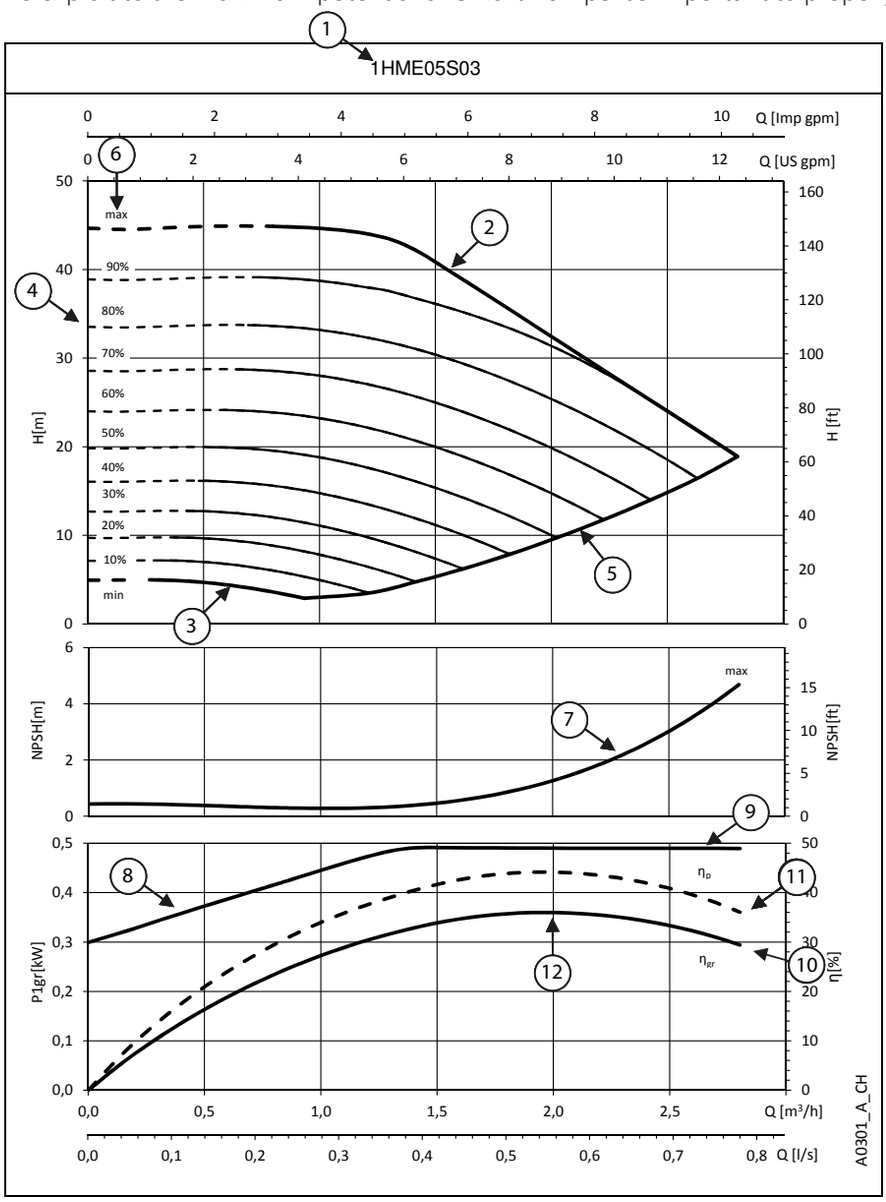

① **Pump model**

② **Maximum curve**: equal to 3600 rpm or pump running at nominal power.

③ **Minimum curve**: it refers to the minimum rpm level the motor can work at, it's calculated depending on the model of pump maximizing for each one the working area and allowing the highest system flexibility.

④ The **area with dotted lines** is where he pump can only operate intermittently for short period s of time.

⑤ Each **intermediate curve** between max and min speed shows the percentage of load the pump+motor+drive system is working at; it's easy to read also from the LED speed bar on the HMI keypad: at 90% there will be 9 led, at 80% there will be 8 and so on.

Example: at 60% there will be 6 lit leds

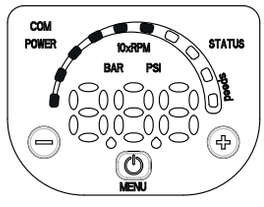

⑥ The **part load percentage** is calculated depending on maximum speed (*max*, 100%) and minimum speed (*min*, equal to 0%, which is the minimum part load step, below it the drive stays powered up but cannot work).

⑦ **NPSH**: is the net positive suction head of pump+motor+drive system working at maximum speed.

⑧ **$P1_{gr}$** is the power absorption in kW of pump+motor+drive system working at maximum speed.

⑨ **Load control**: the Smart Pump controls and limits power consumption at high flow/low head, in this way the motor stays protected from overload and ensure a longer life of pump+motor+drive system.

⑩ **η_{gr}** is the efficiency of pump+motor+drive system working at maximum speed.

⑪ **η_p** is the efficiency of the hydraulic part, working at maximum speed.

⑫ **Working point**: it's important to make sure the pump is working at the best working point, the one at highest efficiency.
It's easy to find it: it's the highest point of the hp pump efficiency curve; once you found it, you can learn also flow values from x-axis called Q and head values from y-axis called H which allow the system to work at the best working point.

e-HME SERIES - SINGLE PHASE VERSION
HYDRAULIC PERFORMANCE TABLE

PUMP	MOTOR		e-SM SET		Q = DELIVERY							
TYPE				* I	l/min 0	6,7	13,3	20,0	26,7	33,3	40,0	46,7
HME..S, HME..N	P_N	TYPE	* P_1	208-240 V	m^3/h 0	0,4	0,8	1,2	1,6	2,0	2,4	2,8
Single-phase	kW	1x230 V	kW	A	H = TOTAL HEAD IN METRES OF COLUMN OF WATER							
1HME05S03M02	0,37	ESM80/103 HM..	0,49	2,24	44,7	44,8	44,9	44,1	39,2	32,5	25,7	
1HME08S05M02	0,55	ESM80/105 HM..	0,69	3,07	71,6	71,5	71,7	70,4	60,3	50,0	39,6	
1HME11S07M02	0,75	ESM80/107 HM..	0,91	4,04	98,5	98,5	98,8	94,3	80,7	66,8	52,9	
1HME15S11M02	1,1	ESM80/111 HM..	1,33	5,85	134,0	134,4	134,6	132,3	119,5	99,5	79,6	
1HME17S15M02	1,5	ESM80/115 HM..	1,77	7,77	151,8	152,2	152,7	149,6	141,6	128,6	110,7	

PUMP	MOTOR		e-SM SET		Q = DELIVERY							
TYPE				* I	l/min 0	13,3	26,7	40,0	53,3	66,7	80,0	86,7
HME..S, HME..N	P_N	TYPE	* P_1	208-240 V	m^3/h 0	0,8	1,6	2,4	3,2	4,0	4,8	5,2
Single-phase	kW	1x230 V	kW	A	H = TOTAL HEAD IN METRES OF COLUMN OF WATER							
3HME03S03M02	0,37	ESM80/103 HM..	0,49	2,24	33,3	33,9	33,4	31,5	25,6	20,1	14,6	11,8
3HME05S05M02	0,55	ESM80/105 HM..	0,69	3,07	55,5	56,5	55,7	47,5	38,2	29,4	20,5	16,0
3HME07S07M02	0,75	ESM80/107 HM..	0,91	4,06	77,6	79,1	78,1	64,9	52,0	39,8	27,5	21,3
3HME09S11M02	1,1	ESM80/111 HM..	1,33	5,85	99,8	101,8	100,3	93,6	76,1	59,6	43,0	34,7
3HME12S15M02	1,5	ESM80/115 HM..	1,78	7,80	133,1	135,9	133,6	127,3	103,6	81,5	59,2	48,1

PUMP	MOTOR		e-SM SET		Q = DELIVERY							
TYPE				* I	l/min 0	23,3	46,7	70,0	93,3	116,7	140,0	170,0
HME..S, HME..N	P_N	TYPE	* P_1	208-240 V	m^3/h 0	1,4	2,8	4,2	5,6	7,0	8,4	10,2
Single-phase	kW	1x230 V	kW	A	H = TOTAL HEAD IN METRES OF COLUMN OF WATER							
5HME02S03M02	0,37	ESM80/103 HM..	0,49	2,24	22,2	22,4	21,9	19,8	16,2	13,0	9,9	6,0
5HME03S05M02	0,55	ESM80/105 HM..	0,69	3,07	33,3	33,6	32,9	29,5	24,1	19,3	14,7	8,8
5HME04S07M02	0,75	ESM80/107 HM..	0,91	4,05	44,4	44,7	43,8	40,1	32,8	26,4	20,2	12,2
5HME06S11M02	1,1	ESM80/111 HM..	1,33	5,85	66,7	67,2	65,8	59,0	48,1	38,7	29,5	17,5
5HME08S15M02	1,5	ESM80/115 HM..	1,78	7,82	88,9	89,5	87,7	80,2	65,5	52,8	40,4	24,4

PUMP	MOTOR		e-SM SET		Q = DELIVERY							
TYPE				* I	l/min 0	40,0	80,0	120,0	160,0	200,0	240,0	283,3
HME..S, HME..N	P_N	TYPE	* P_1	208-240 V	m^3/h 0	2,4	4,8	7,2	9,6	12,0	14,4	17,0
Single-phase	kW	1x230 V	kW	A	H = TOTAL HEAD IN METRES OF COLUMN OF WATER							
10HME01S07M02	0,75	ESM80/107 HM..	0,86	3,80	17,5	17,5	17,0	16,1	14,7	12,7	10,2	6,6
10HME02S11M02	1,1	ESM80/111 HM..	1,33	5,85	34,8	34,9	33,8	32,3	27,2	21,9	16,6	11,1
10HME03S15M02	1,5	ESM80/115 HM..	1,78	7,81	52,4	51,8	50,6	46,9	39,2	32,2	25,3	17,8

PUMP	MOTOR		e-SM SET		Q = DELIVERY							
TYPE				* I	l/min 0	70,0	140,0	210,0	280,0	350,0	420,0	483,3
HME..S, HME..N	P_N	TYPE	* P_1	208-240 V	m^3/h 0	4,2	8,4	12,6	16,8	21,0	25,2	29,0
Single-phase	kW	1x230 V	kW	A	H = TOTAL HEAD IN METRES OF COLUMN OF WATER							
15HME01S11M02	1,1	ESM80/111 HM..	1,33	5,85	20,9	20,5	19,7	18,8	16,4	12,7	8,8	5,2
15HME02S15M02	1,5	ESM80/115 HM..	1,79	7,85	42,7	41,8	35,9	29,8	24,2	18,2	11,3	5,1

* Maximum value in specified range: P1 = input power; I = input current.

1-15hmes-esm-2p50-en_a_th

e-HME SERIES - THREE-PHASE VERSION
HYDRAULIC PERFORMANCE TABLE

PUMP	MOTOR		e-SM SET			Q = DELIVERY							
TYPE				* I	* I	l/min 0	6,7	13,3	20,0	26,7	33,3	40,0	46,7
HME..S, HME..N	PN	TYPE	* P1	208-240 V	380-460 V	m3/h 0	0,4	0,8	1,2	1,6	2,0	2,4	2,8
Three-phase	kW		kW	A	A	H = TOTAL HEAD IN METRES OF COLUMN OF WATER							
1HME05S03T..	0,37	ESM80/303 HM..	0,49	2,14	1,46	44,7	44,8	44,9	44,1	39,2	32,5	25,7	19,0
1HME08S05T..	0,55	ESM80/305 HM..	0,69	2,81	1,90	71,6	71,5	71,7	70,4	60,3	50,0	39,6	29,0
1HME11S07T..	0,75	ESM80/307 HM..	0,91	2,41	2,41	98,5	98,5	98,8	94,3	80,7	66,8	52,9	38,6
1HME15S11T..	1,1	ESM80/311 HM..	1,37	4,94	3,45	134,0	134,4	134,6	132,3	119,5	99,6	79,6	59,6
1HME17S15T..	1,5	ESM80/315 HM..	1,81	4,39	4,39	151,8	152,2	152,7	149,6	141,6	128,6	110,7	87,1

PUMP	MOTOR		e-SM SET			Q = DELIVERY							
TYPE				* I	* I	l/min 0	13,3	26,7	40,0	53,3	66,7	80,0	86,7
HME..S, HME..N	PN	TYPE	* P1	208-240 V	380-460 V	m3/h 0	0,8	1,6	2,4	3,2	4,0	4,8	5,2
Three-phase	kW		kW	A	A	H = TOTAL HEAD IN METRES OF COLUMN OF WATER							
3HME03S03T..	0,37	ESM80/303 HM..	0,49	2,14	1,47	33,3	33,9	33,4	31,5	25,6	20,1	14,5	11,8
3HME05S05T..	0,55	ESM80/305 HM..	0,70	2,81	1,92	55,5	56,5	55,7	47,5	38,2	29,4	20,4	16,0
3HME07S07T..	0,75	ESM80/307 HM..	0,92	3,55	2,43	77,6	79,1	78,1	64,9	52,1	39,8	27,5	21,3
3HME09S11T..	1,1	ESM80/311 HM..	1,37	4,95	3,45	99,8	101,8	100,3	93,7	76,1	59,6	43,0	34,7
3HME12S15T..	1,5	ESM80/315 HM..	1,82	6,37	4,42	133,1	135,9	133,6	127,3	103,6	81,5	59,2	48,1
3HME14S22T04	2,2	ESM80/322 HM..	2,53	-	5,84	155,4	158,3	156,1	149,5	139,0	121,7	93,9	79,8

PUMP	MOTOR		e-SM SET			Q = DELIVERY							
TYPE				* I	* I	l/min 0	23,3	46,7	70,0	93,3	116,7	140,0	170,0
HME..S, HME..N	PN	TYPE	* P1	208-240 V	380-460 V	m3/h 0	1,4	2,8	4,2	5,6	7,0	8,4	10,2
Three-phase	kW		kW	A	A	H = TOTAL HEAD IN METRES OF COLUMN OF WATER							
5HME02S03T..	0,37	ESM80/303 HM..	0,50	2,13	1,48	22,2	22,4	21,9	19,8	16,2	13,0	9,9	6,0
5HME03S05T..	0,55	ESM80/305 HM..	0,70	2,80	1,92	33,3	33,6	32,9	29,5	24,1	19,3	14,7	8,8
5HME04S07T..	0,75	ESM80/307 HM..	0,92	3,55	2,42	44,4	44,7	43,8	40,1	32,8	26,4	20,2	12,2
5HME06S11T..	1,1	ESM80/311 HM..	1,38	4,97	3,46	66,7	67,2	65,8	59,0	48,1	38,7	29,5	17,5
5HME08S15T..	1,5	ESM80/315 HM..	1,83	6,40	4,44	88,9	89,5	87,7	80,2	65,5	52,8	40,5	24,4
5HME10S22T04	2,2	ESM80/322 HM..	2,54	-	5,87	111,1	111,8	109,5	105,3	95,0	77,9	61,6	40,4

PUMP	MOTOR		e-SM SET			Q = DELIVERY							
TYPE				* I	* I	l/min 0	40,0	80,0	120,0	160,0	200,0	240,0	283,3
HME..S, HME..N	PN	TYPE	* P1	208-240 V	380-460 V	m3/h 0	2,4	4,8	7,2	9,6	12,0	14,4	17,0
Three-phase	kW		kW	A	A	H = TOTAL HEAD IN METRES OF COLUMN OF WATER							
10HME01S07T..	0,75	ESM80/307 HM..	0,84	3,39	2,24	17,5	17,4	16,9	16,1	14,7	12,7	10,2	6,7
10HME02S11T..	1,1	ESM80/311 HM..	1,37	4,94	3,45	34,8	34,9	33,8	32,3	27,2	21,9	16,6	11,1
10HME03S15T..	1,5	ESM80/315 HM..	1,83	6,38	4,43	52,4	51,8	50,6	47,0	39,2	32,2	25,3	17,8
10HME04S22T04	2,2	ESM80/322 HM..	2,54	-	5,87	69,8	69,1	67,3	65,1	56,9	47,3	37,8	27,5

PUMP	MOTOR		e-SM SET			Q = DELIVERY							
TYPE				* I	* I	l/min 0	70,0	140,0	210,0	280,0	350,0	420,0	483,3
HME..S, HME..N	PN	TYPE	* P1	208-240 V	380-460 V	m3/h 0	4,2	8,4	12,6	16,8	21,0	25,2	29,0
Three-phase	kW		kW	A	A	H = TOTAL HEAD IN METRES OF COLUMN OF WATER							
15HME01S11T..	1,1	ESM80/311 HM..	0,84	3,39	3,45	20,9	20,5	19,7	18,8	16,4	12,7	8,8	5,2
15HME02S15T..	1,5	ESM80/315 HM..	1,85	6,45	4,47	42,7	41,8	35,9	29,8	24,2	18,2	11,3	5,1
15HME03S22T04	2,2	ESM80/322 HM..	2,50	-	5,80	64,0	64,1	50,5	40,6	31,9	23,4	15,4	10,0

* Maximum value in specified range: P1 = input power; I = input current.

1-15hmes-esmT-2p50-en_a_th

e-HME SERIES
ELECTRICAL DATA TABLE

The nominal motor power is guaranteed in the 3000-3600 rpm range. The motor is automatically limited to 3600 rpm maximum; the motor works partially loaded below 3000 rpm.

SINGLE-PHASE VERSION

P_N kW	MOTOR TYPE	IEC SIZE	Construction Design	SPEED (RPM)* min^{-1}	INPUT CURRENT I (A) 208-240 V	DATA RELATED TO THE VOLTAGE OF 230V In A	cosφ	Tn Nm	η % 4/4	η % 3/4	η % 2/4	IES
0,37	ESM80/103 HM..	80	SPECIAL	3000	2,28-1,99	2,08	0,95	1,18	81,3	79,1	74,3	2
				3600	2,30-2,02	2,10		0,98	80,6	77,5	72,0	
0,55	ESM80/105 HM..	80		3000	3,27-2,85	2,96	0,97	1,75	83,3	82,2	78,8	2
				3600	3,27-2,85	2,96		1,46	83,3	81,5	77,5	
0,75	ESM80/107 HM..	80		3000	4,43-3,84	4,00	0,98	2,39	83,3	83,3	81,5	2
				3600	4,38-3,79	3,94		1,99	84,5	83,5	80,6	
1,10	ESM80/111 HM..	80		3000	6,26-5,35	5,64	0,99	3,50	85,7	85,1	82,7	2
				3600	6,20-5,32	5,63		2,92	85,9	84,6	81,4	
1,50	ESM80/115 HM..	80		3000	8,57-7,32	7,69	0,99	4,77	85,6	85,7	84,7	2
				3600	8,42-7,25	7,62		3,98	86,3	85,9	84,0	

* The indicated rotational speed are representing the upper and lower limits of the rated power operational speed range.

eHM-eVM_Smart-motm_en_a_te

THREE-PHASE VERSION

P_N kW	MOTOR TYPE	IEC SIZE	Construction Design	SPEED (RPM) * min^{-1}	INPUT CURRENT I (A) 208-240/380-460 V	DATA RELATED TO THE VOLTAGE OF 400 V In A	cosφ	Tn Nm	η % 4/4	η % 3/4	η % 2/4	IES
0,37	ESM80/303 HM..	80	SPECIAL	3000	2,01-1,85/1,41-1,28	1,42	0,48	1,18	78,6	75,6	70,1	2
				3600	2,13-1,83/1,43-1,33	1,36		0,98	83,1	80,7	76,1	
0,55	ESM80/305 HM..	80		3000	2,81-2,57/1,89-1,69	1,88	0,52	1,75	81,1	79,3	75,5	2
				3600	2,90-2,52/1,90-1,73	1,80		1,46	85,4	83,8	80,6	
0,75	ESM80/307 HM..	80		3000	3,70-3,37/2,44-2,17	2,41	0,55	2,39	81,9	81,2	78,6	2
				3600	3,74-3,28/2,43-2,20	2,31		1,99	86,1	85,5	83,1	
1,10	ESM80/311 HM..	80		3000	5,12-4,73/3,41-3,01	3,35	0,57	3,50	82,8	81,3	77,7	2
				3600	5,15-4,69/3,45-3,06	3,32		2,92	83,5	81,6	77,6	
1,50	ESM80/315 HM..	80		3000	6,73-6,17/4,49-3,95	4,39	0,59	4,77	83,1	82,8	80,6	2
				3600	6,69-6,08/4,48-3,97	4,32		3,98	84,6	83,6	80,8	
2,20	ESM80/322 HM..	80		3000	- /6,03-5,32	5,81	0,62	7,00	87,6	87,4	85,9	2
				3600	- /5,93-5,24	5,74		5,84	88,9	88,2	86,3	

* The indicated rotational speed are representing the upper and lower limits of the rated power operational speed range.

eHM-eVM_Smart-mott-en_a_te

Note. **IES** refers to the efficiency class for frequency converter + motor systems (known as power transmission systems-PDS) with power between 0.12 kW and 1000 kW and between 100 V and 1000 V, according to the standard **EN 50598-2:2014**.

1, 3, 5HME..S SERIES - SINGLE-PHASE VERSION
DIMENSIONS AND WEIGHTS

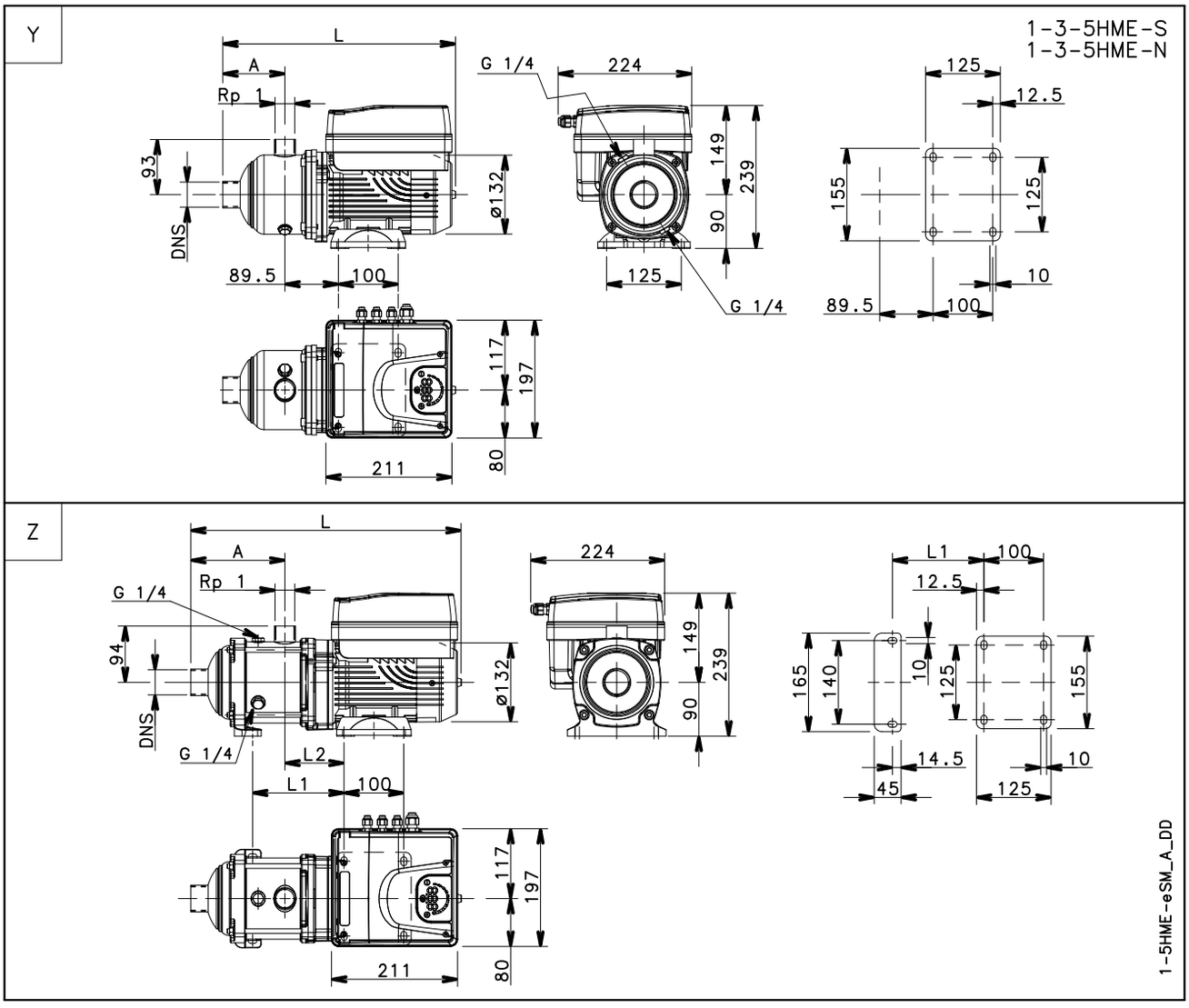

PUMP TYPE	VERSION	Ref.	MOTOR		DIMENSIONS (mm)					PN	WEIGHT
			kW	SIZE	A	DNS	L	L1	L2	bar	kg
1HME05S03M02	SINGLE-PHASE	Y	0,37	80	127	Rp 1	414	-	-	10	10
1HME08S05M02		Z	0,55	80	171	Rp 1	467	168	99	10	12
1HME11S07M02			0,75	80	231	Rp 1	527	228	99	10	13
1HME15S11M02			1,1	80	311	Rp 1	607	308	99	16	15
1HME17S15M02			1,5	80	351	Rp 1	647	348	99	16	16
3HME03S03M02		Y	0,37	80	87	Rp 1	374	-	-	10	9
3HME05S05M02			0,55	80	127	Rp 1	414	-	-	10	10
3HME07S07M02		Z	0,75	80	151	Rp 1	447	148	99	10	11
3HME09S11M02			1,1	80	191	Rp 1	487	188	99	16	14
3HME12S15M02			1,5	80	251	Rp 1	547	248	99	16	15
5HME02S03M02		Y	0,37	80	104	Rp 1 1/4	391	-	-	10	9
5HME03S05M02			0,55	80	104	Rp 1 1/4	391	-	-	10	9
5HME04S07M02			0,75	80	129	Rp 1 1/4	416	-	-	10	10
5HME06S11M02		Z	1,1	80	158	Rp 1 1/4	454	153	99	10	12
5HME08S15M02			1,5	80	208	Rp 1 1/4	504	203	99	10	14

1, 3, 5HME..S SERIES - THREE-PHASE VERSION
DIMENSIONS AND WEIGHTS

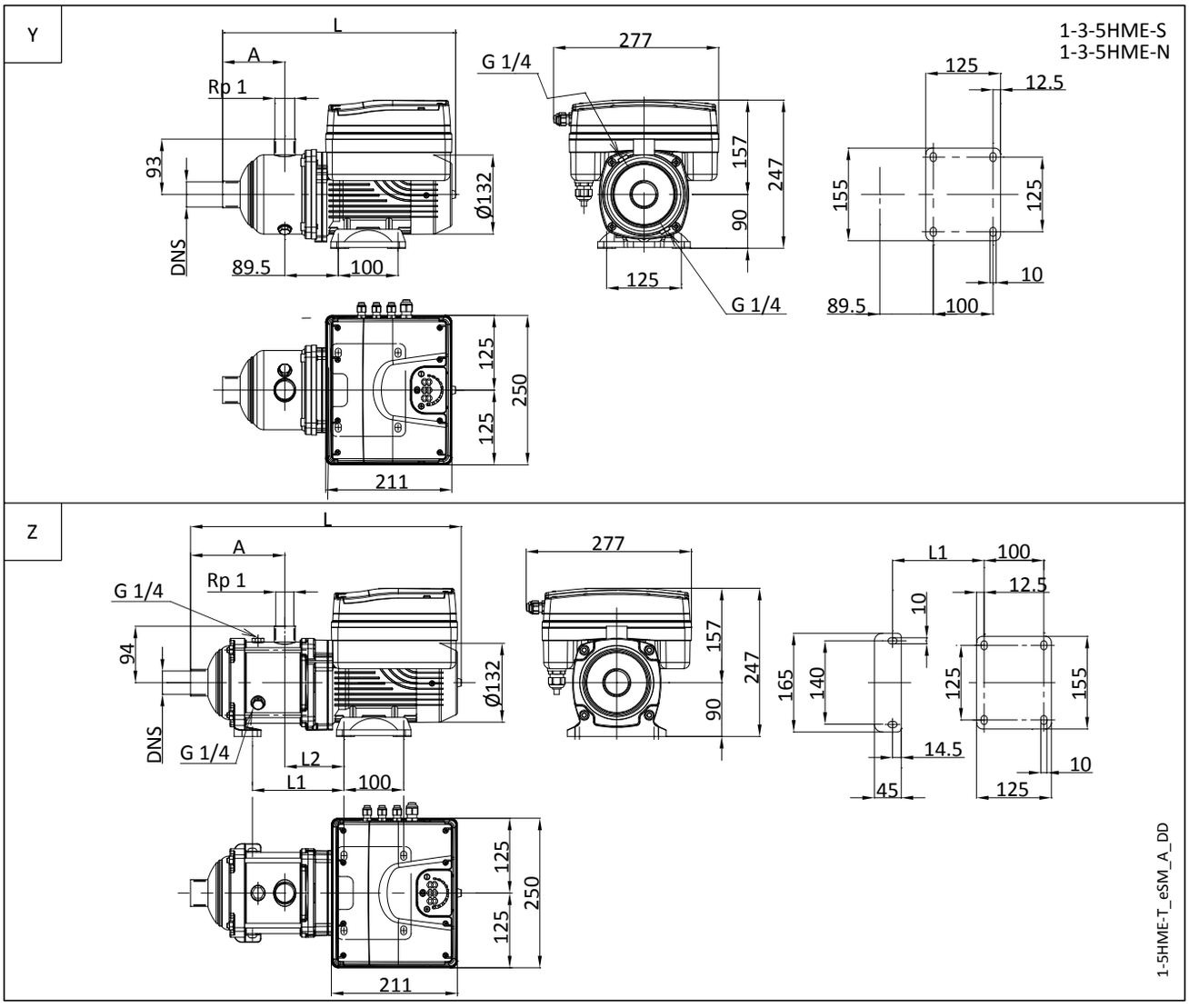

PUMP TYPE	VERSION	Ref.	MOTOR		DIMENSIONS (mm)					PN	WEIGHT
			kW	SIZE	A	DNS	L	L1	L2	bar	kg
1HME05S03T05	THREE-PHASE	Y	0,37	80	127	Rp 1	414	-	-	10	15
1HME08S05T05		Z	0,55	80	171	Rp 1	467	168	99	10	17
1HME11S07T05			0,75	80	231	Rp 1	527	228	99	10	18
1HME15S11T05			1,1	80	311	Rp 1	607	308	99	16	21
1HME17S15T05			1,5	80	351	Rp 1	647	348	99	16	22
3HME03S03T05		Y	0,37	80	87	Rp 1	374	-	-	10	15
3HME05S05T05			0,55	80	127	Rp 1	414	-	-	10	15
3HME07S07T05		Z	0,75	80	151	Rp 1	447	148	99	10	17
3HME09S11T05			1,1	80	191	Rp 1	487	188	99	16	19
3HME12S15T05			1,5	80	251	Rp 1	547	248	99	16	20
3HME14S22T04			2,2	80	291	Rp 1	587	288	99	16	22
5HME02S03T05		Y	0,37	80	104	Rp 1 1/4	391	-	-	10	15
5HME03S05T05			0,55	80	104	Rp 1 1/4	391	-	-	10	15
5HME04S07T05			0,75	80	129	Rp 1 1/4	416	-	-	10	15
5HME06S11T05		Z	1,1	80	158	Rp 1 1/4	454	153	99	10	18
5HME08S15T05			1,5	80	208	Rp 1 1/4	504	203	99	10	19
5HME10S22T04			2,2	80	258	Rp 1 1/4	554	253	99	16	22

1HME..S SERIES
OPERATING CHARACTERISTICS

1HME05S03

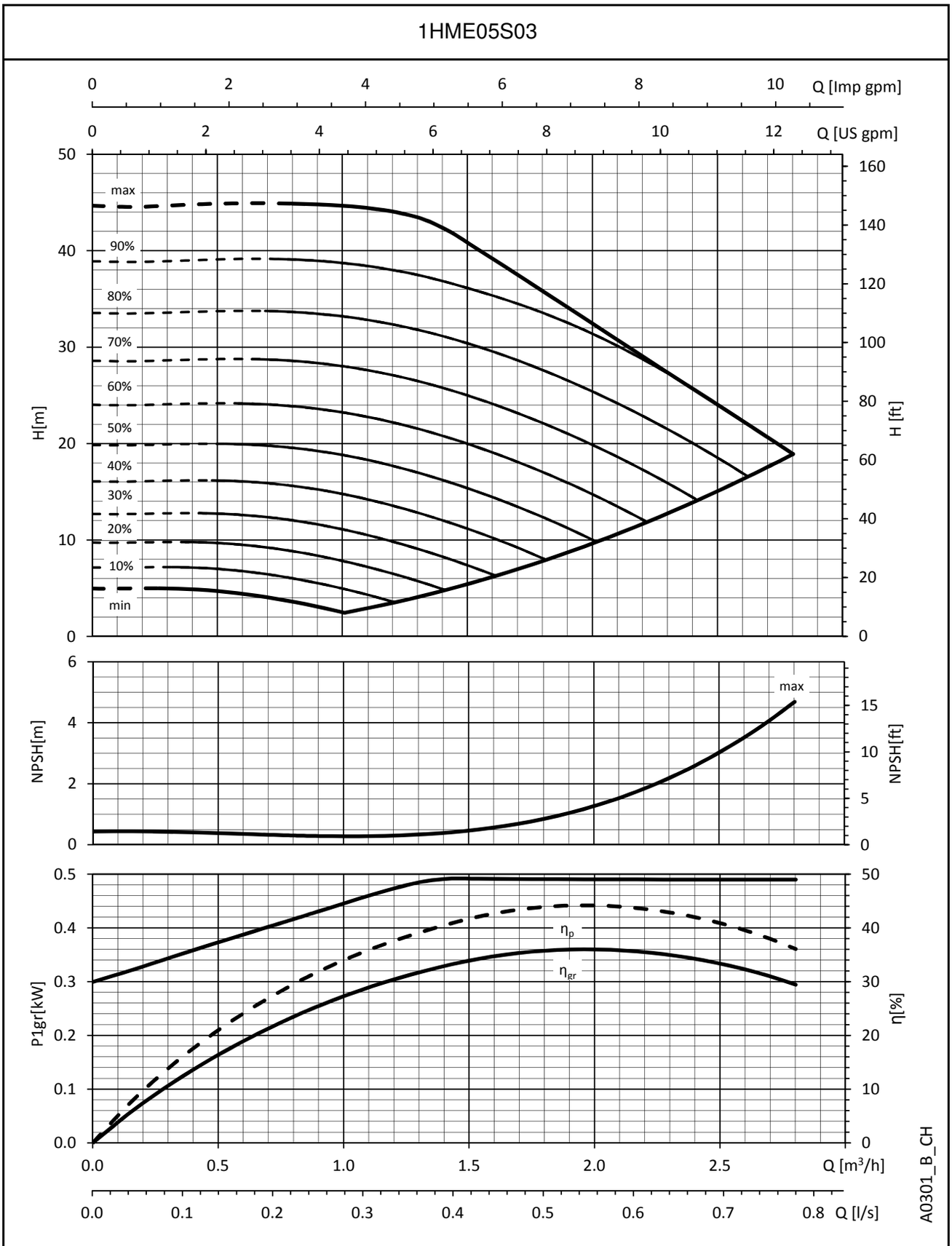

The performances are valid for liquid with density ρ = 1 Kg/dm³ and kinematic viscosity ν = 1 mm²/sec.

1HME..S SERIES
OPERATING CHARACTERISTICS

1HME08S05

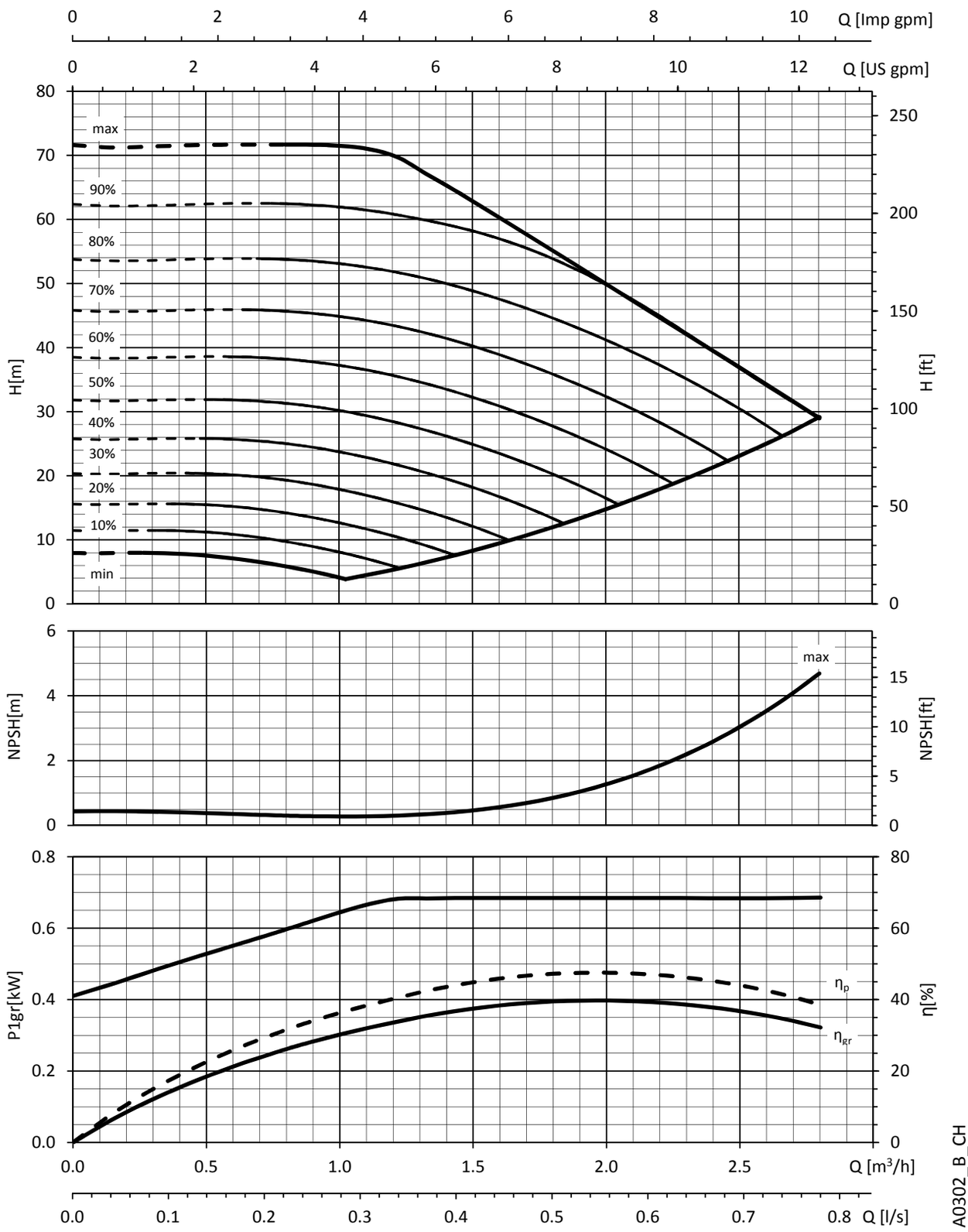

The performances are valid for liquid with density ρ = 1 Kg/dm³ and kinematic viscosity ν = 1 mm²/sec.

1HME..S SERIES
OPERATING CHARACTERISTICS

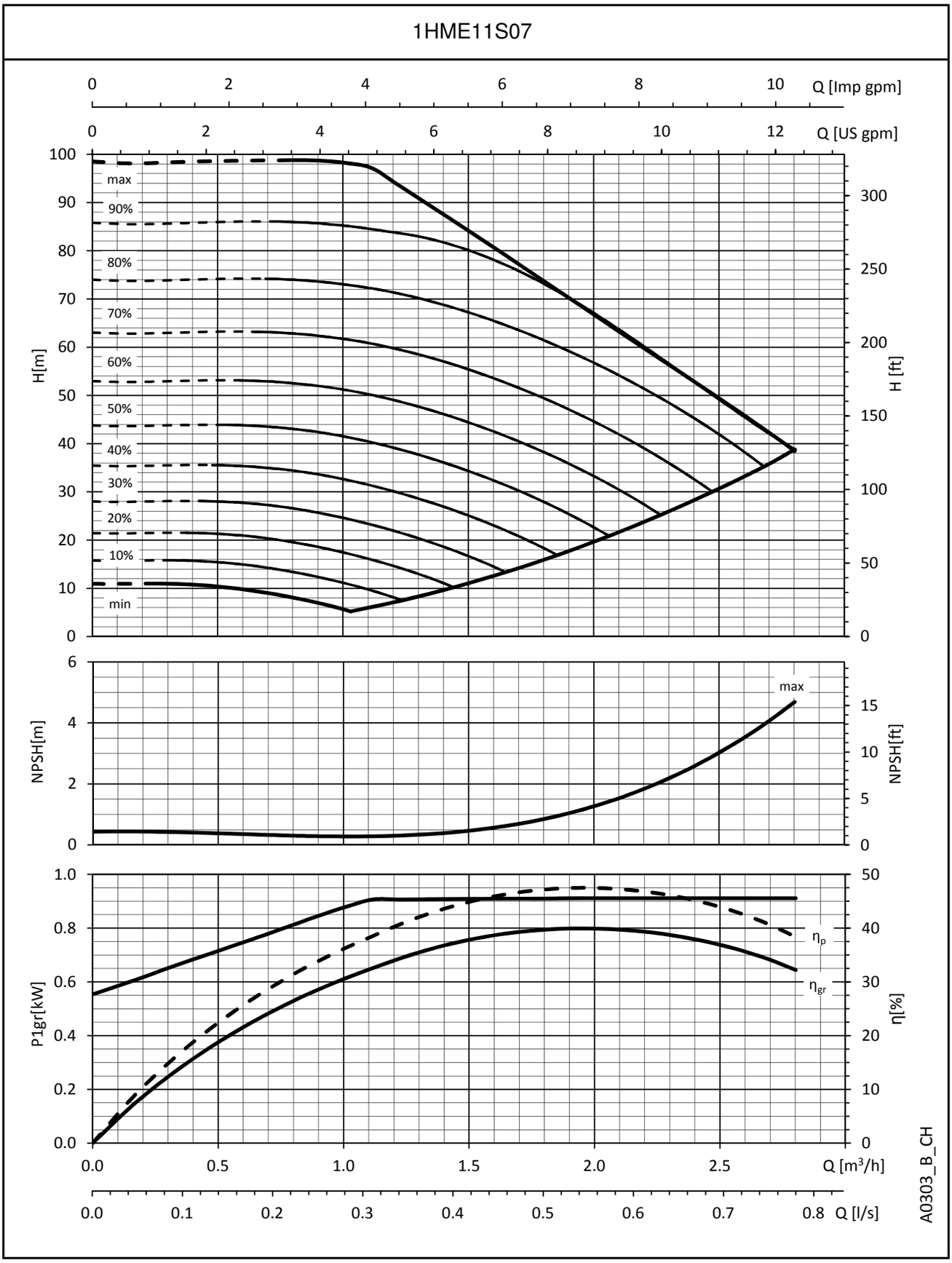

The performances are valid for liquid with density ρ = 1 Kg/dm³ and kinematic viscosity ν = 1 mm²/sec.

1HME..S SERIES
OPERATING CHARACTERISTICS

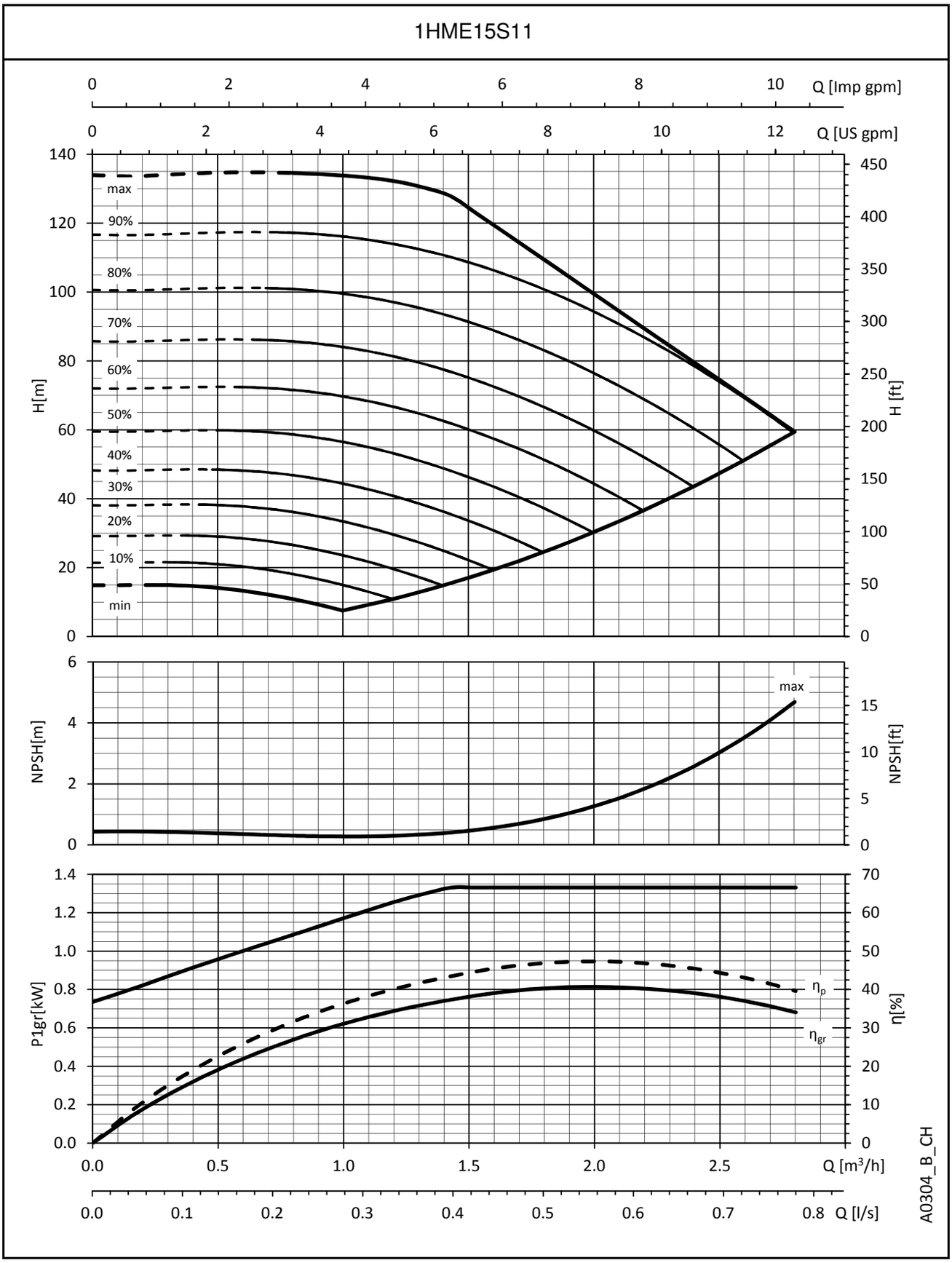

The performances are valid for liquid with density ρ = 1 Kg/dm³ and kinematic viscosity ν = 1 mm²/sec.

1HME..S SERIES
OPERATING CHARACTERISTICS

1HME17S15

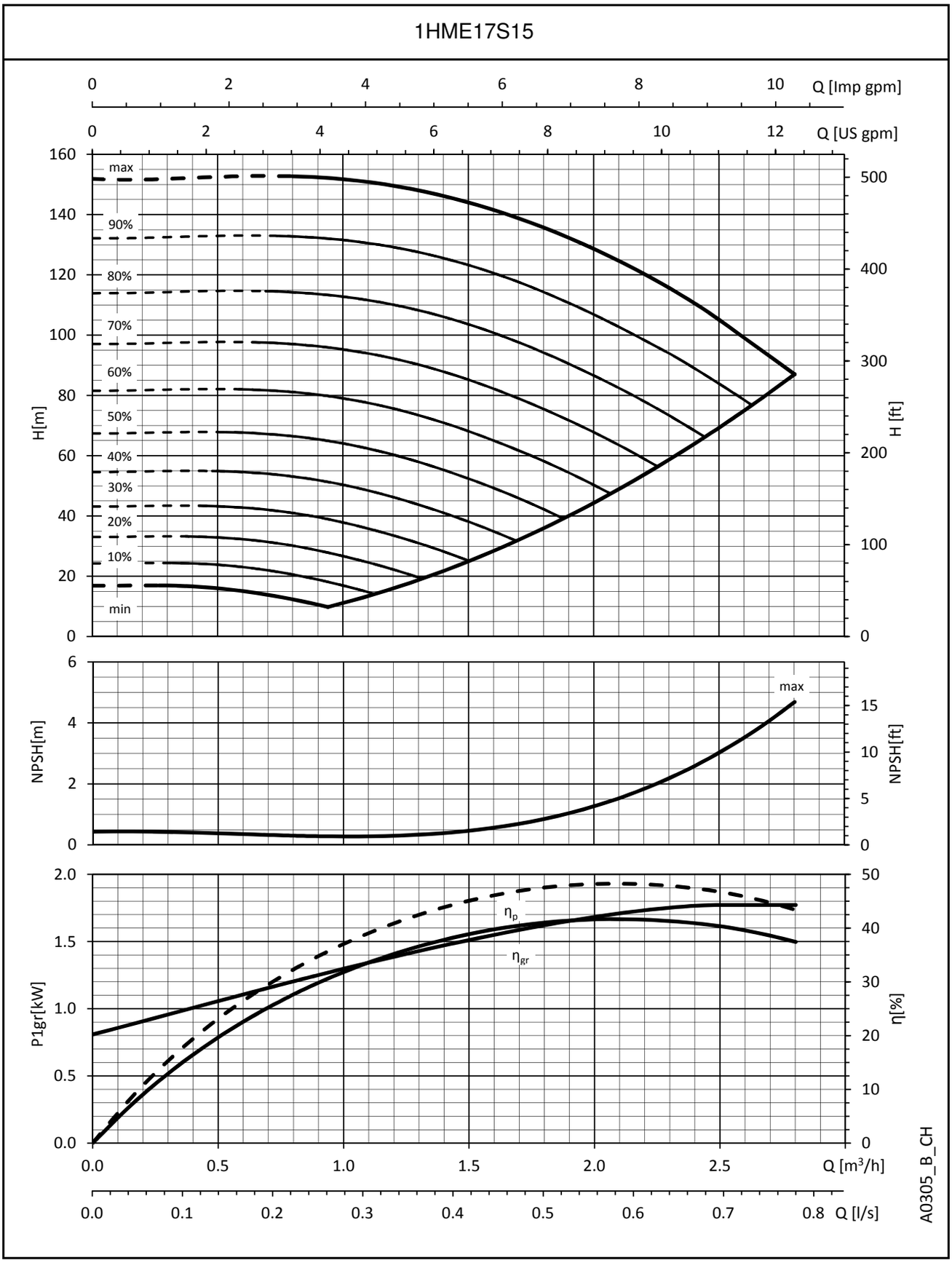

The performances are valid for liquid with density ρ = 1 Kg/dm³ and kinematic viscosity ν = 1 mm²/sec.

3HME..S SERIES
OPERATING CHARACTERISTICS

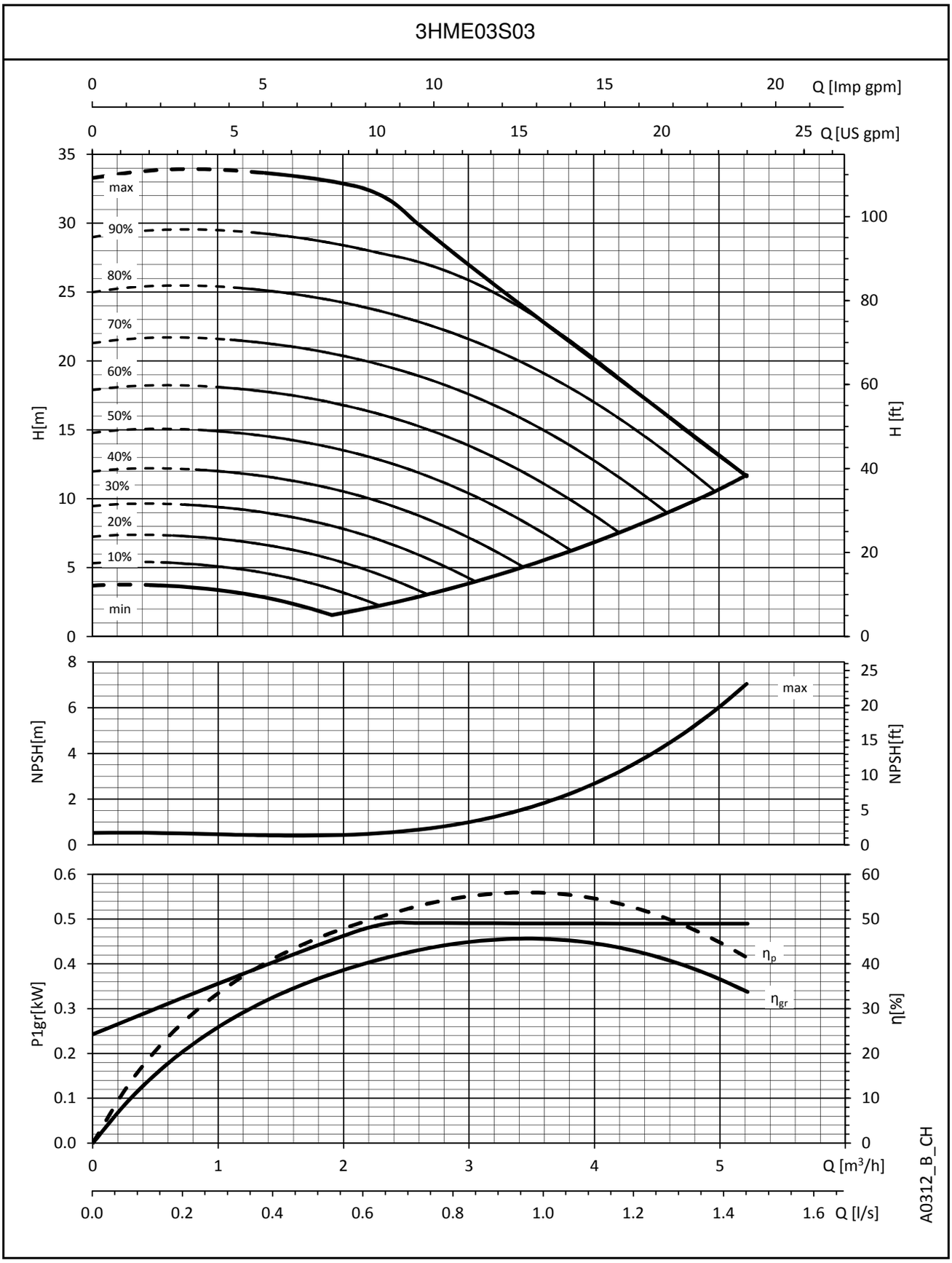

The performances are valid for liquid with density ρ = 1 Kg/dm³ and kinematic viscosity ν = 1 mm²/sec.

3HME..S SERIES
OPERATING CHARACTERISTICS

3HME05S05

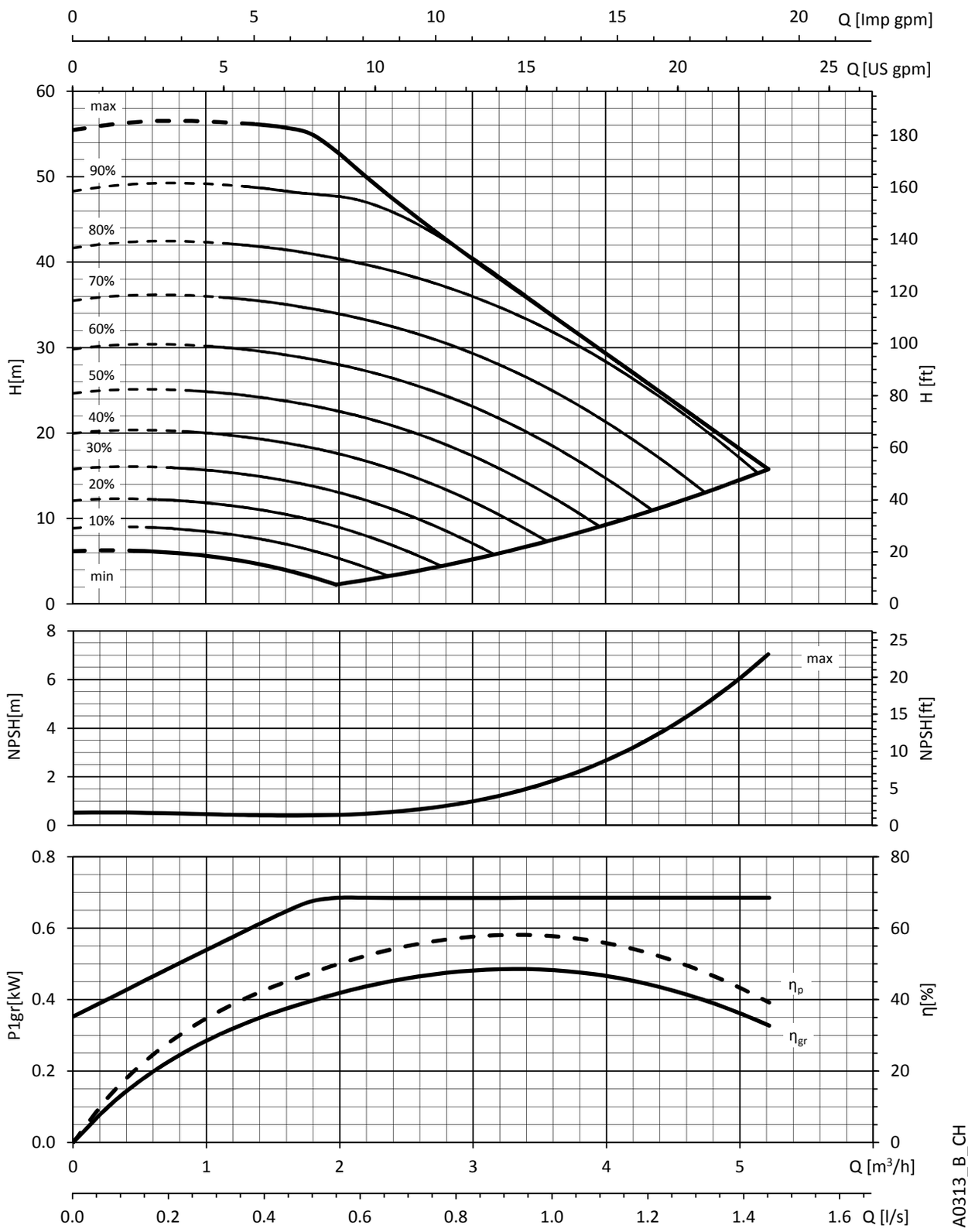

The performances are valid for liquid with density ρ = 1 Kg/dm³ and kinematic viscosity ν = 1 mm²/sec.

3HME..S SERIES
OPERATING CHARACTERISTICS

3HME07S07

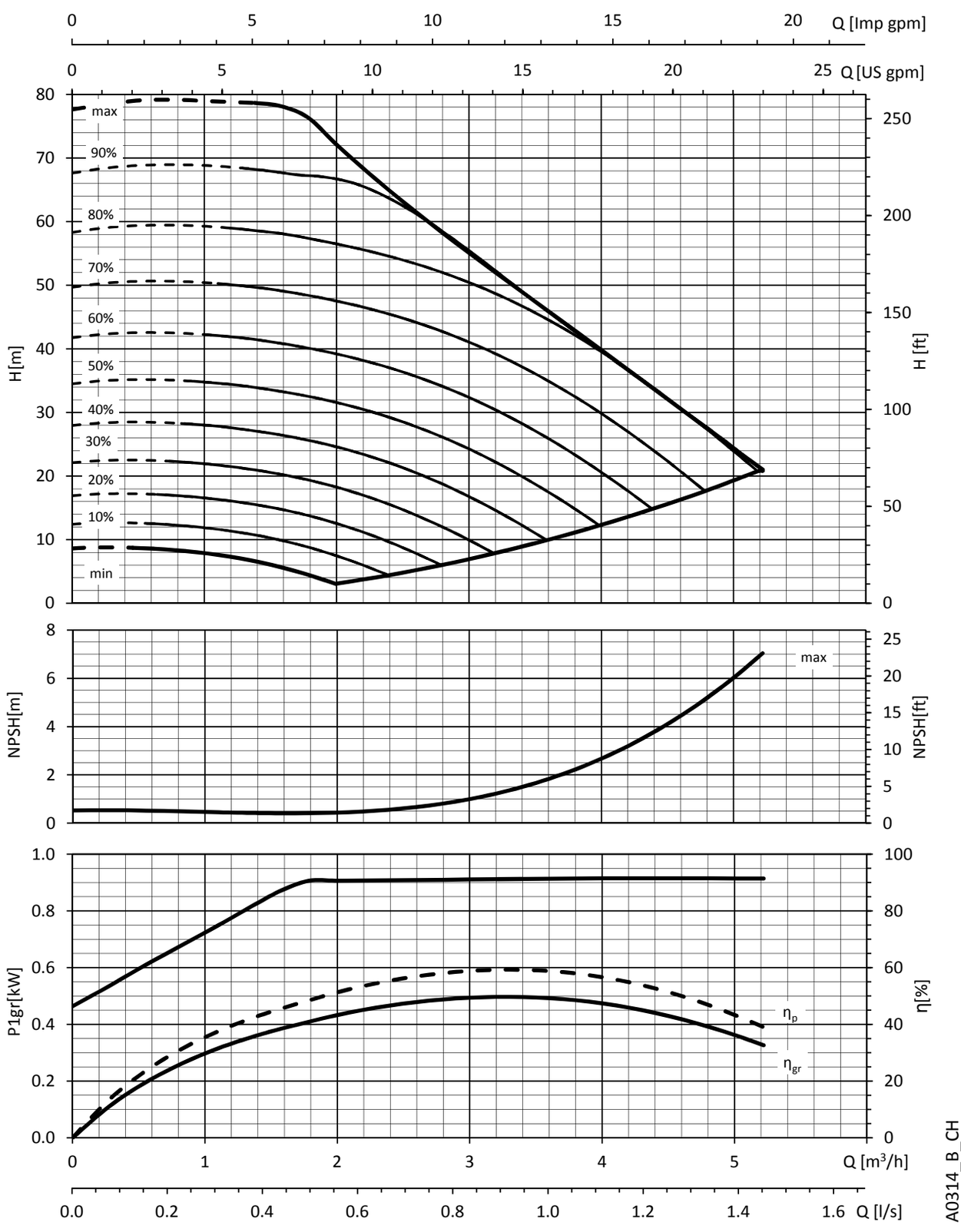

The performances are valid for liquid with density ρ = 1 Kg/dm³ and kinematic viscosity ν = 1 mm²/sec.

3HME..S SERIES
OPERATING CHARACTERISTICS

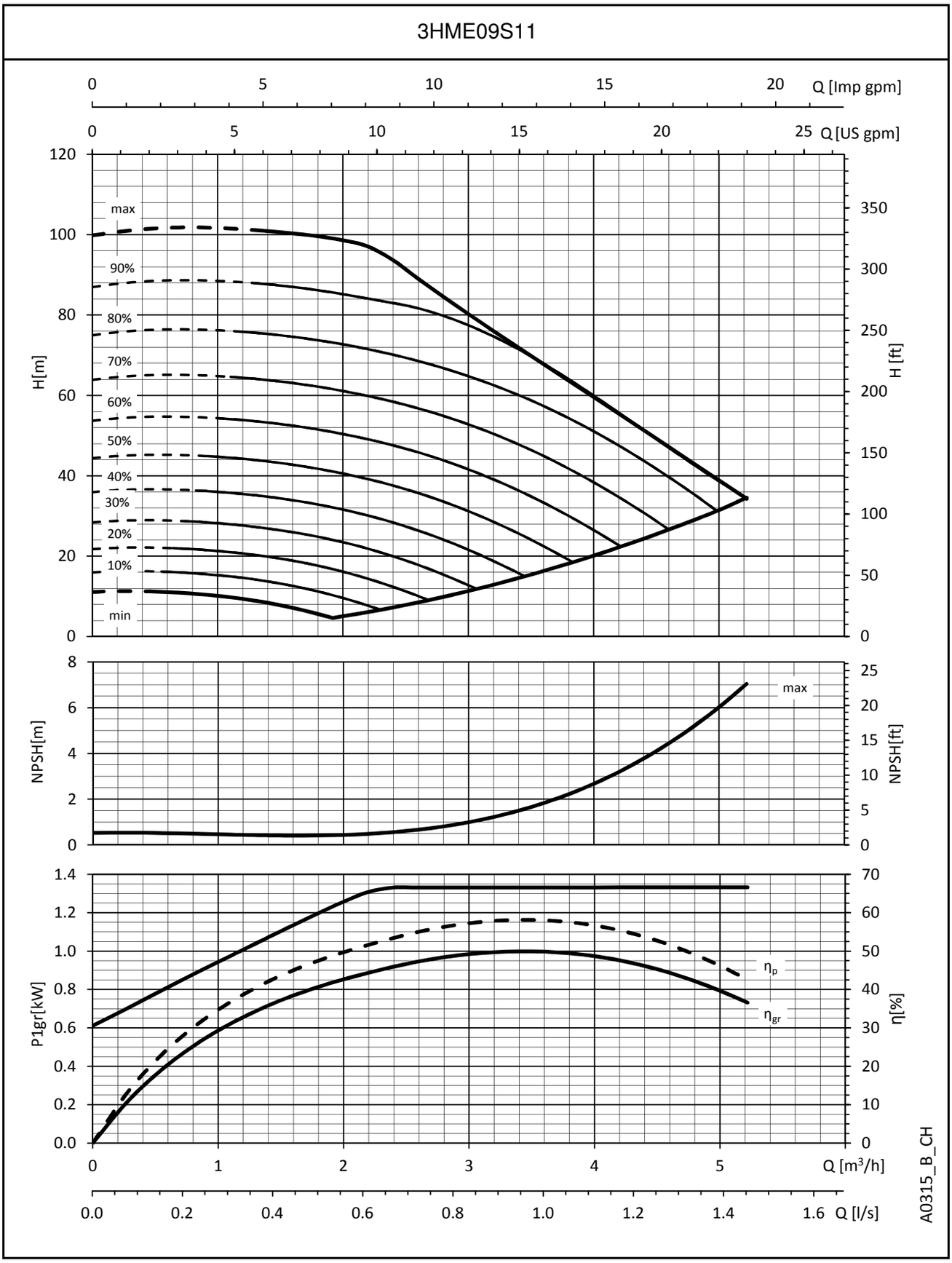

The performances are valid for liquid with density ρ = 1 Kg/dm³ and kinematic viscosity ν = 1 mm²/sec.

3HME..S SERIES
OPERATING CHARACTERISTICS

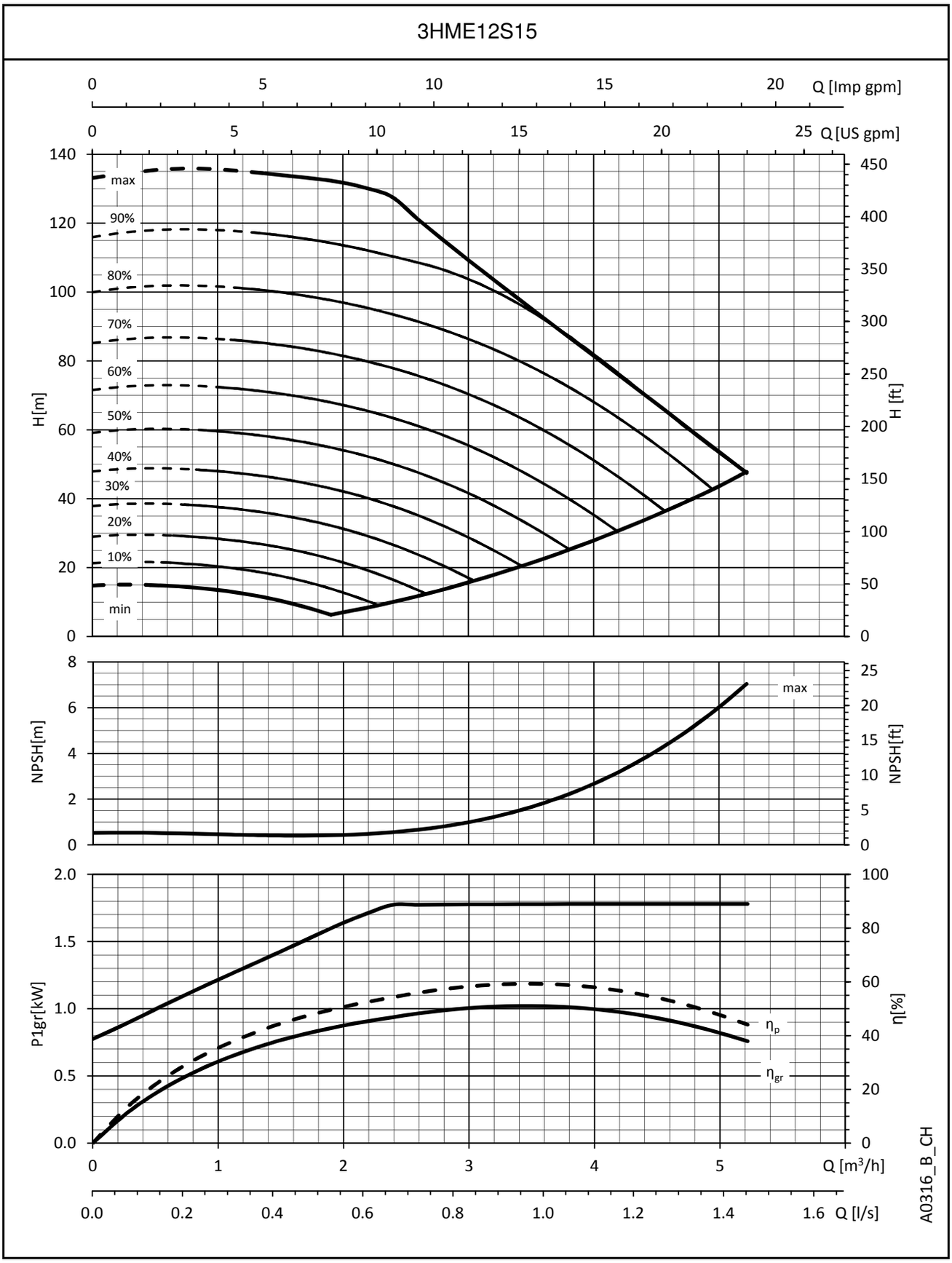

The performances are valid for liquid with density ρ = 1 Kg/dm³ and kinematic viscosity ν = 1 mm²/sec.

3HME..S SERIES
OPERATING CHARACTERISTICS

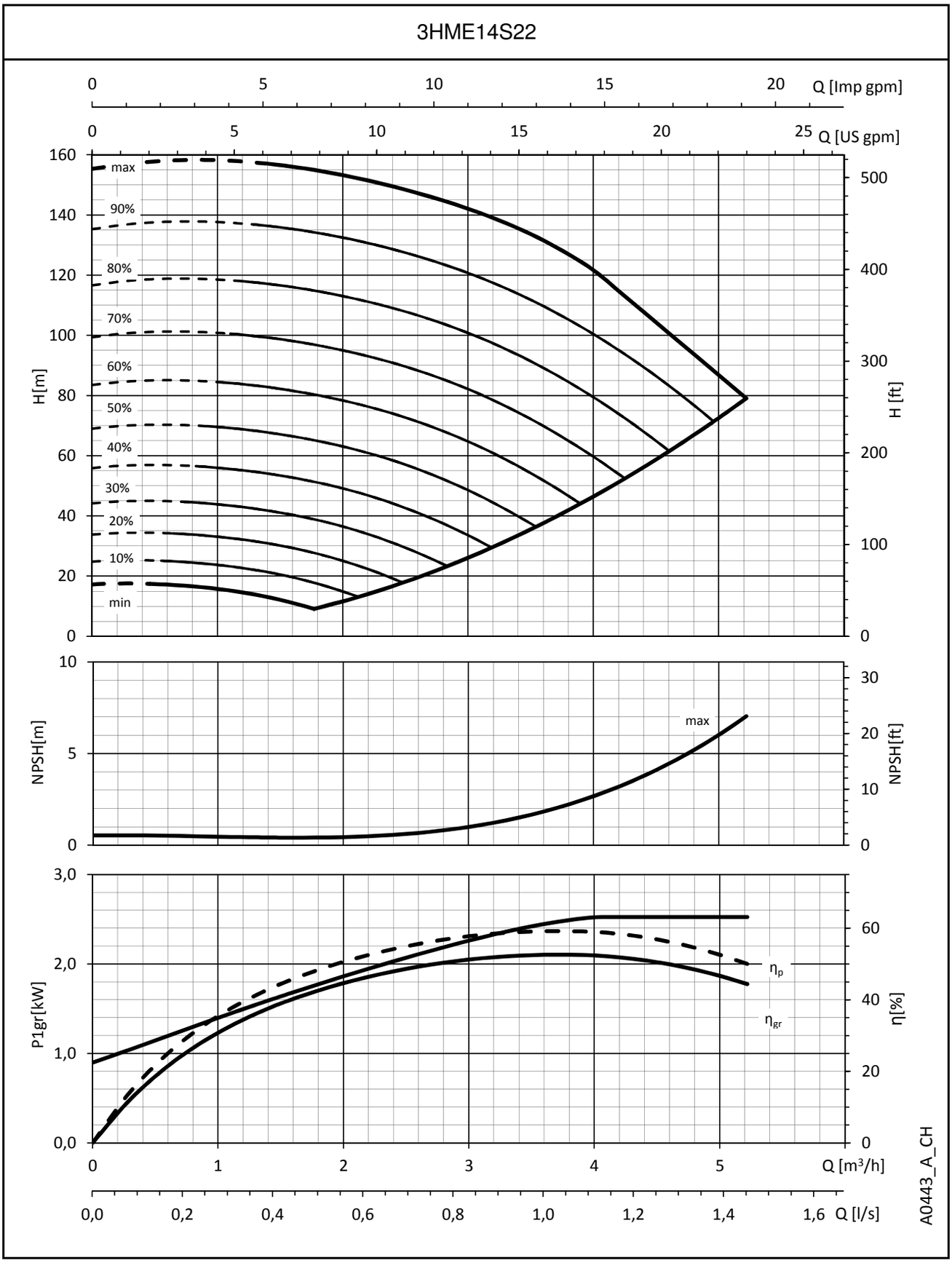

The performances are valid for liquid with density ρ = 1 Kg/dm³ and kinematic viscosity ν = 1 mm²/sec.

5HME..S SERIES
OPERATING CHARACTERISTICS

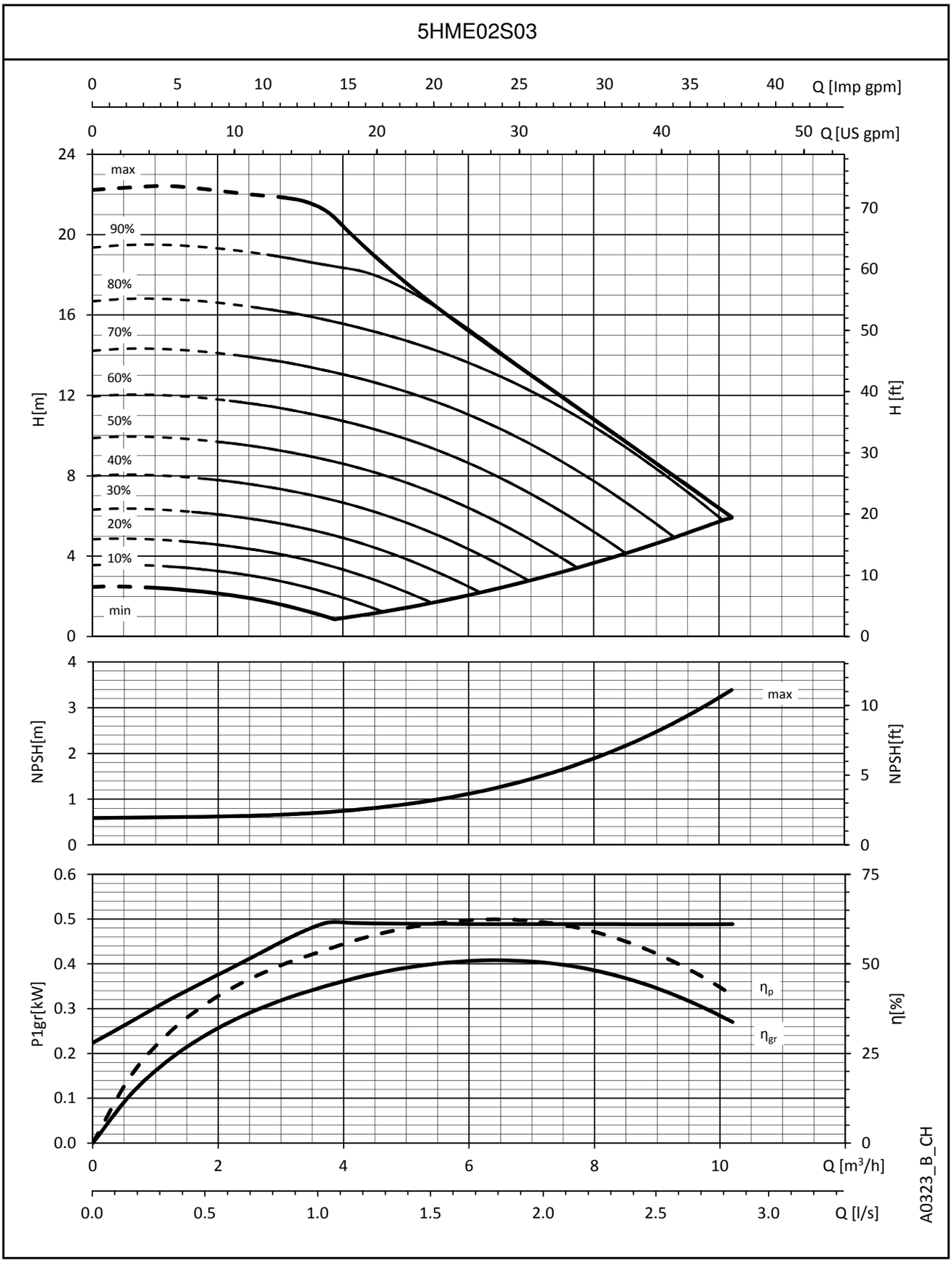

The performances are valid for liquid with density ρ = 1 Kg/dm³ and kinematic viscosity ν = 1 mm²/sec.

5HME..S SERIES
OPERATING CHARACTERISTICS

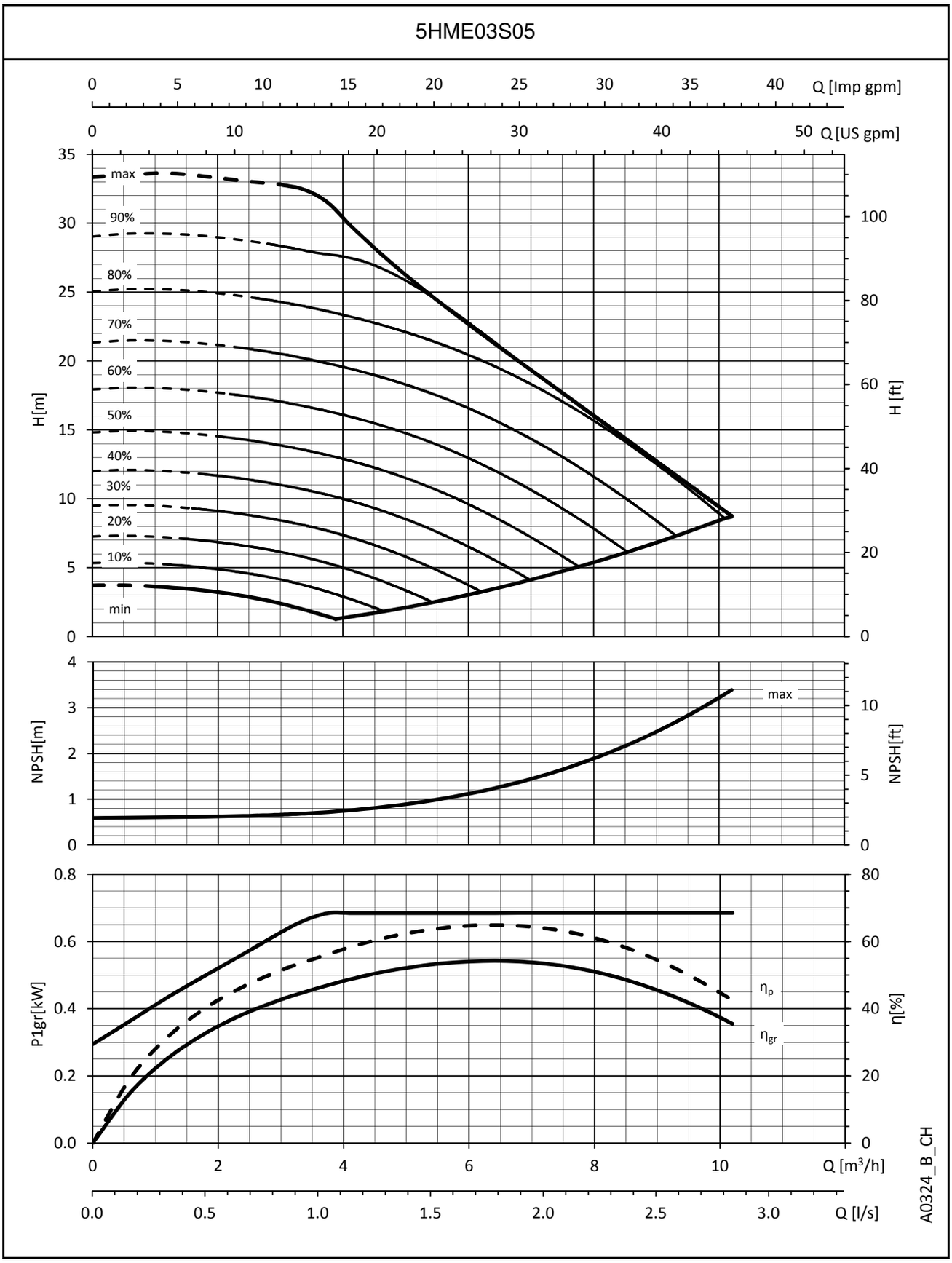

The performances are valid for liquid with density ρ = 1 Kg/dm³ and kinematic viscosity ν = 1 mm²/sec.

5HME..S SERIES
OPERATING CHARACTERISTICS

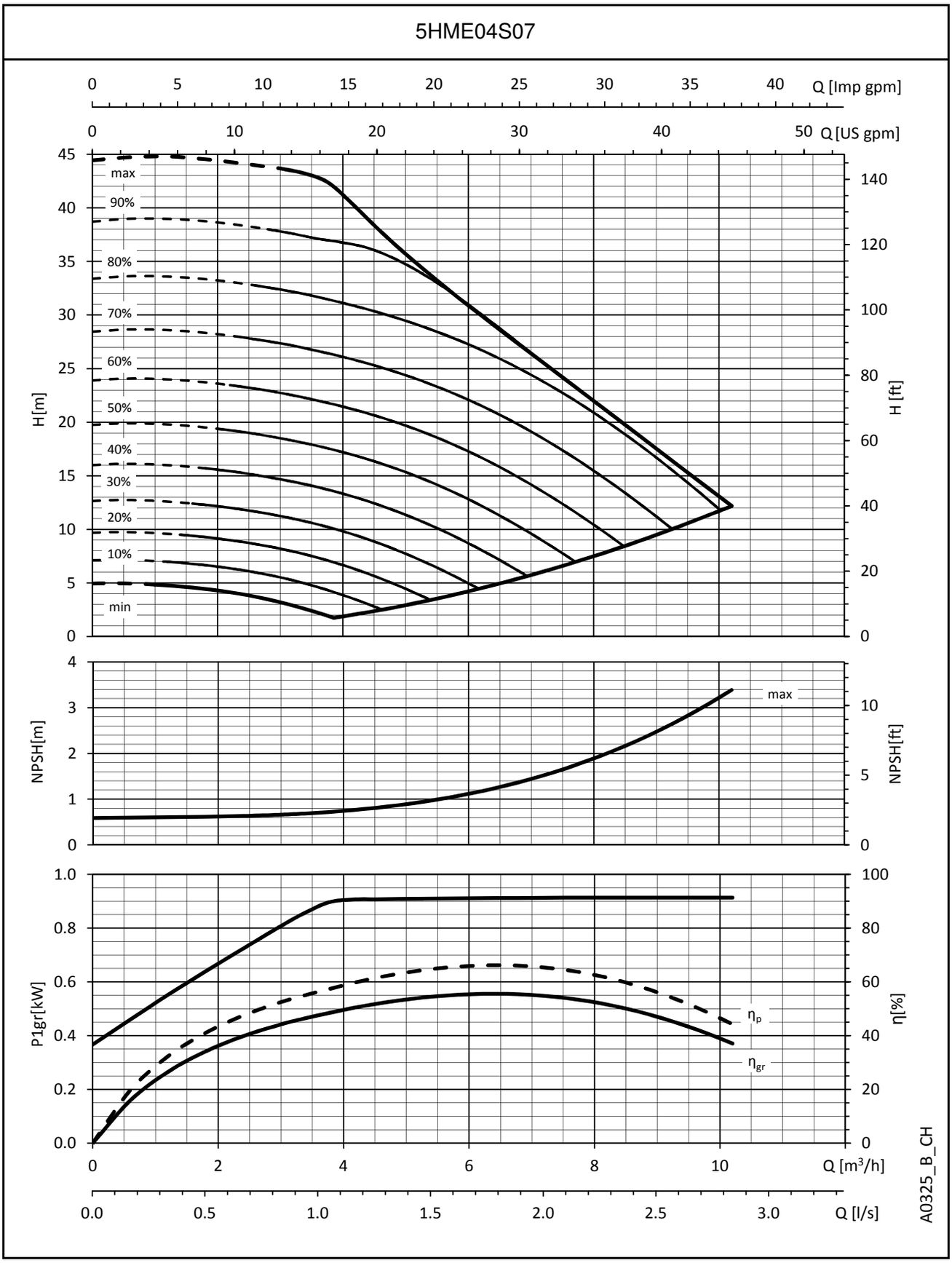

The performances are valid for liquid with density ρ = 1 Kg/dm³ and kinematic viscosity ν = 1 mm²/sec.

5HME..S SERIES
OPERATING CHARACTERISTICS

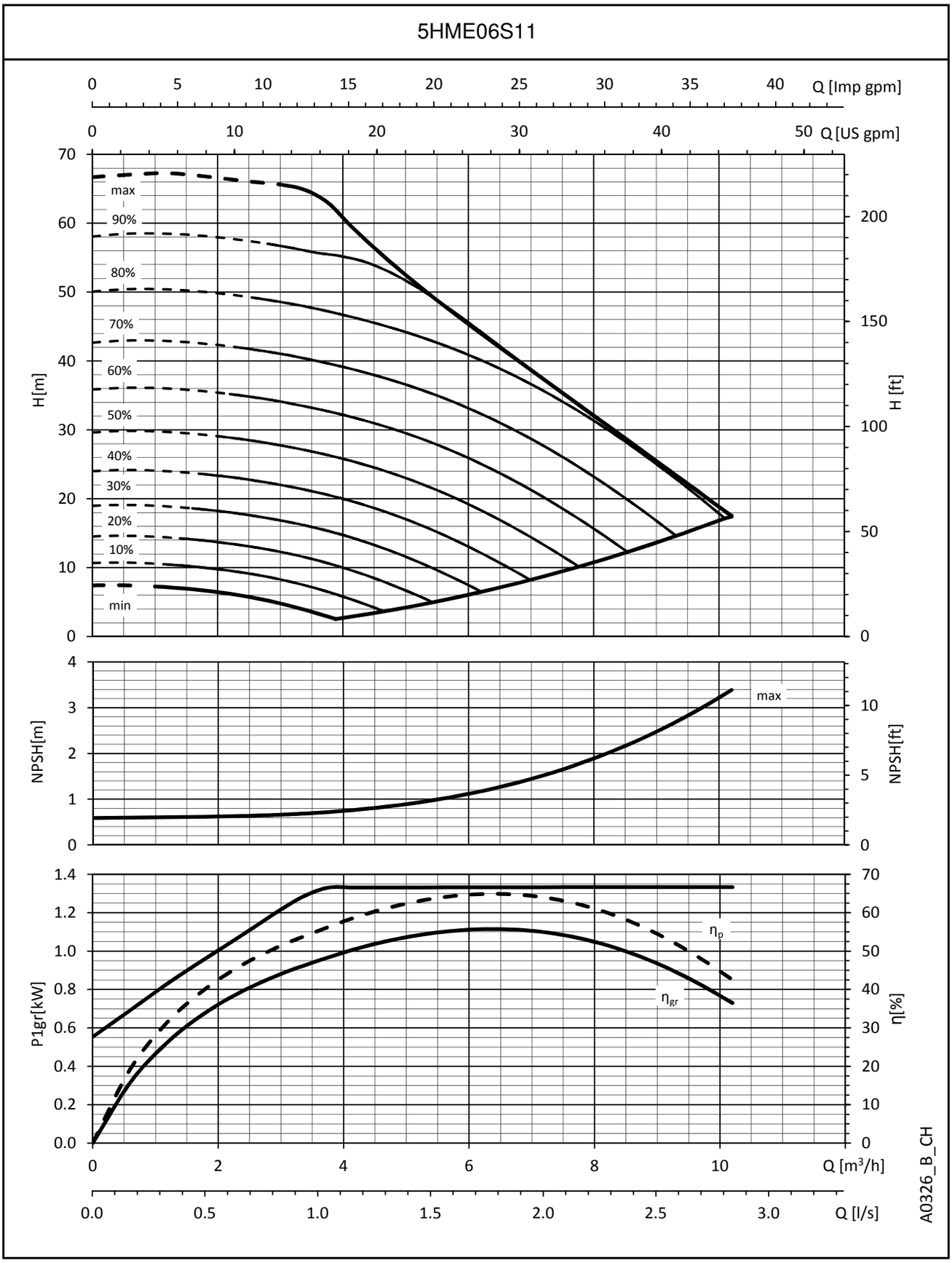

The performances are valid for liquid with density ρ = 1 Kg/dm³ and kinematic viscosity ν = 1 mm²/sec.

5HME..S SERIES
OPERATING CHARACTERISTICS

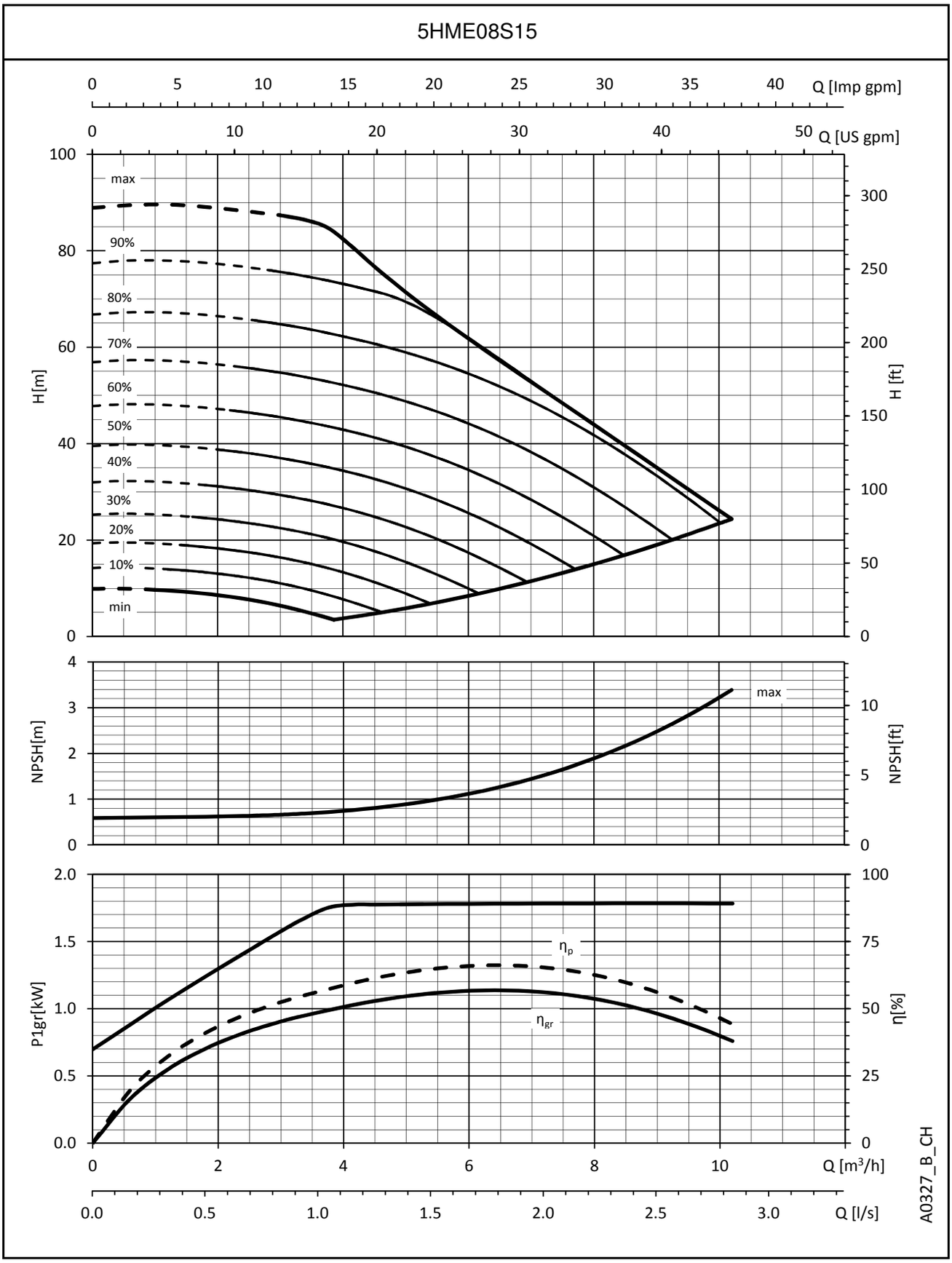

The performances are valid for liquid with density ρ = 1 Kg/dm³ and kinematic viscosity ν = 1 mm²/sec.

5HME..S SERIES
OPERATING CHARACTERISTICS

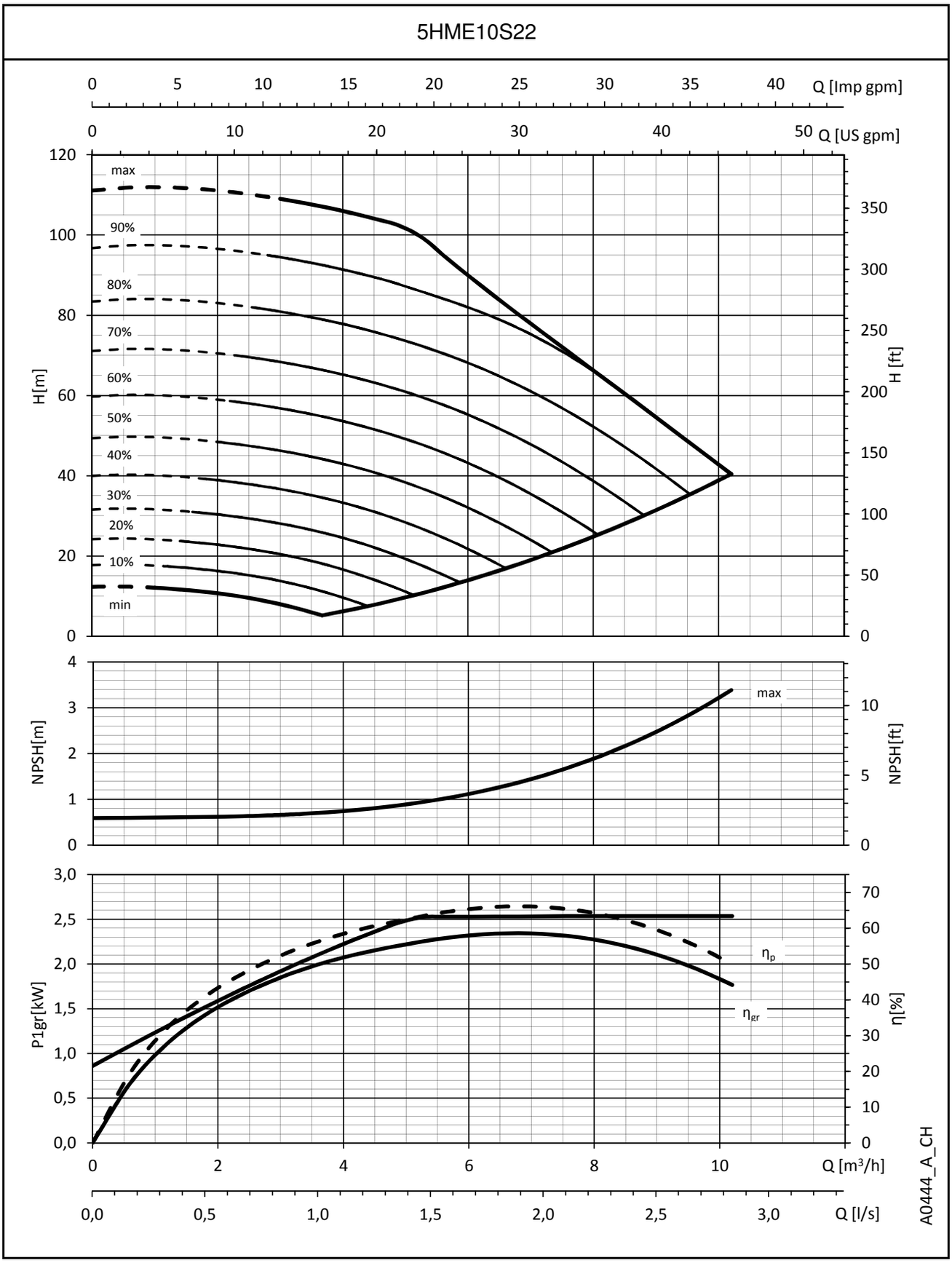

The performances are valid for liquid with density ρ = 1 Kg/dm³ and kinematic viscosity ν = 1 mm²/sec.

10, 15HME..S SERIES - SINGLE-PHASE VERSION
DIMENSIONS AND WEIGHTS

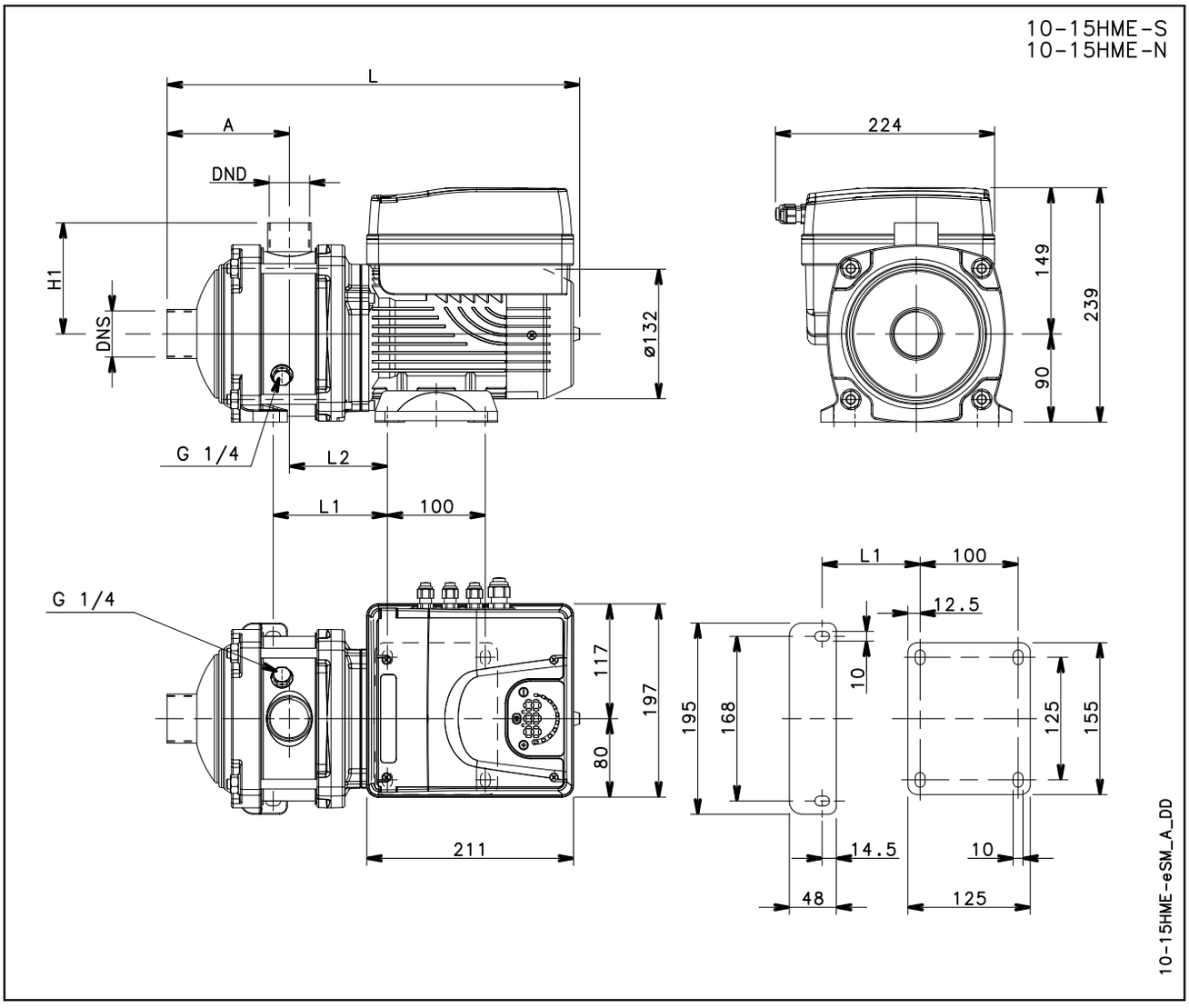

PUMP TYPE	VERSION	MOTOR		DIMENSIONS (mm)							PN	WEIGHT
		kW	SIZE	A	DND	DNS	H1	L	L1	L2	bar	kg
10HME01S07M02	SINGLE-PHASE	0,75	80	125	Rp 1 1/4	Rp 1 1/2	113	422	116,5	100	10	12
10HME02S11M02		1,1	80	125	Rp 1 1/4	Rp 1 1/2	113	422	116,5	100	10	14
10HME03S15M02		1,5	80	125	Rp 1 1/4	Rp 1 1/2	113	422	116,5	100	10	14
15HME01S11M02		1,1	80	144	Rp 1 1/2	Rp 2	114	457	148,5	116	10	14
15HME02S15M02		1,5	80	144	Rp 1 1/2	Rp 2	114	457	148,5	116	10	14

10-15hmes-esm-2p50-en_a_td

10, 15HME..S SERIES - THREE-PHASE VERSION
DIMENSIONS AND WEIGHTS

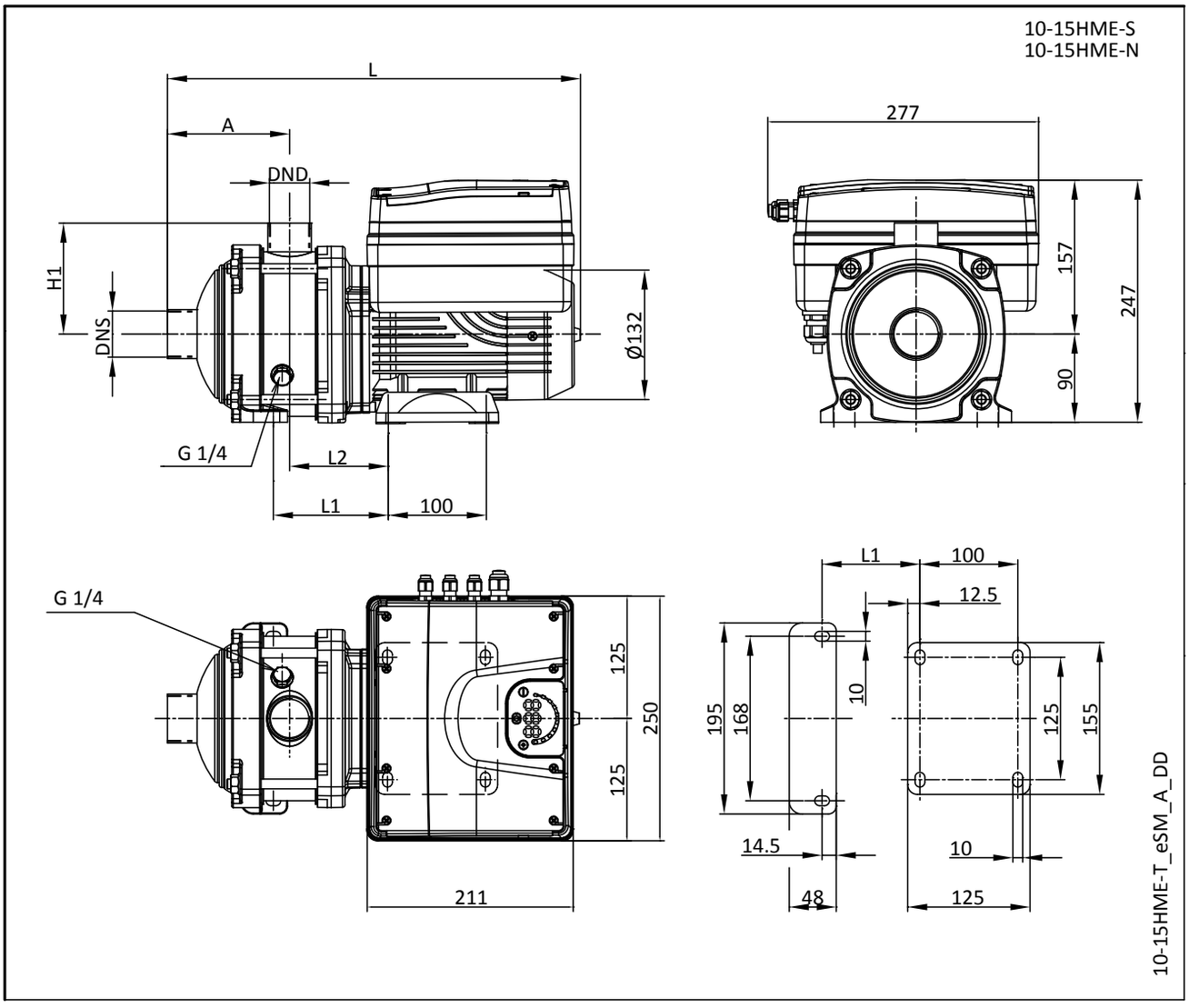

PUMP TYPE	VERSION	MOTOR		DIMENSIONS (mm)							PN	WEIGHT
		kW	SIZE	A	DND	DNS	H1	L	L1	L2	bar	kg
10HME01S07T05	THREE-PHASE	0,75	80	125	Rp 1 1/4	Rp 1 1/2	113	422	116,5	100	10	18
10HME02S11T05		1,1	80	125	Rp 1 1/4	Rp 1 1/2	113	422	116,5	100	10	19
10HME03S15T05		1,5	80	125	Rp 1 1/4	Rp 1 1/2	113	422	116,5	100	10	19
10HME04S22T04		2,2	80	157	Rp 1 1/4	Rp 1 1/2	113	454	148,5	100	10	22
15HME01S11T05		1,1	80	144	Rp 1 1/2	Rp 2	114	457	148,5	116	10	20
15HME02S15T05		1,5	80	144	Rp 1 1/2	Rp 2	114	457	148,5	116	10	20
15HME03S22T04		2,2	80	192	Rp 1 1/2	Rp 2	114	505	196,5	116	10	22

10HME..S SERIES
OPERATING CHARACTERISTICS

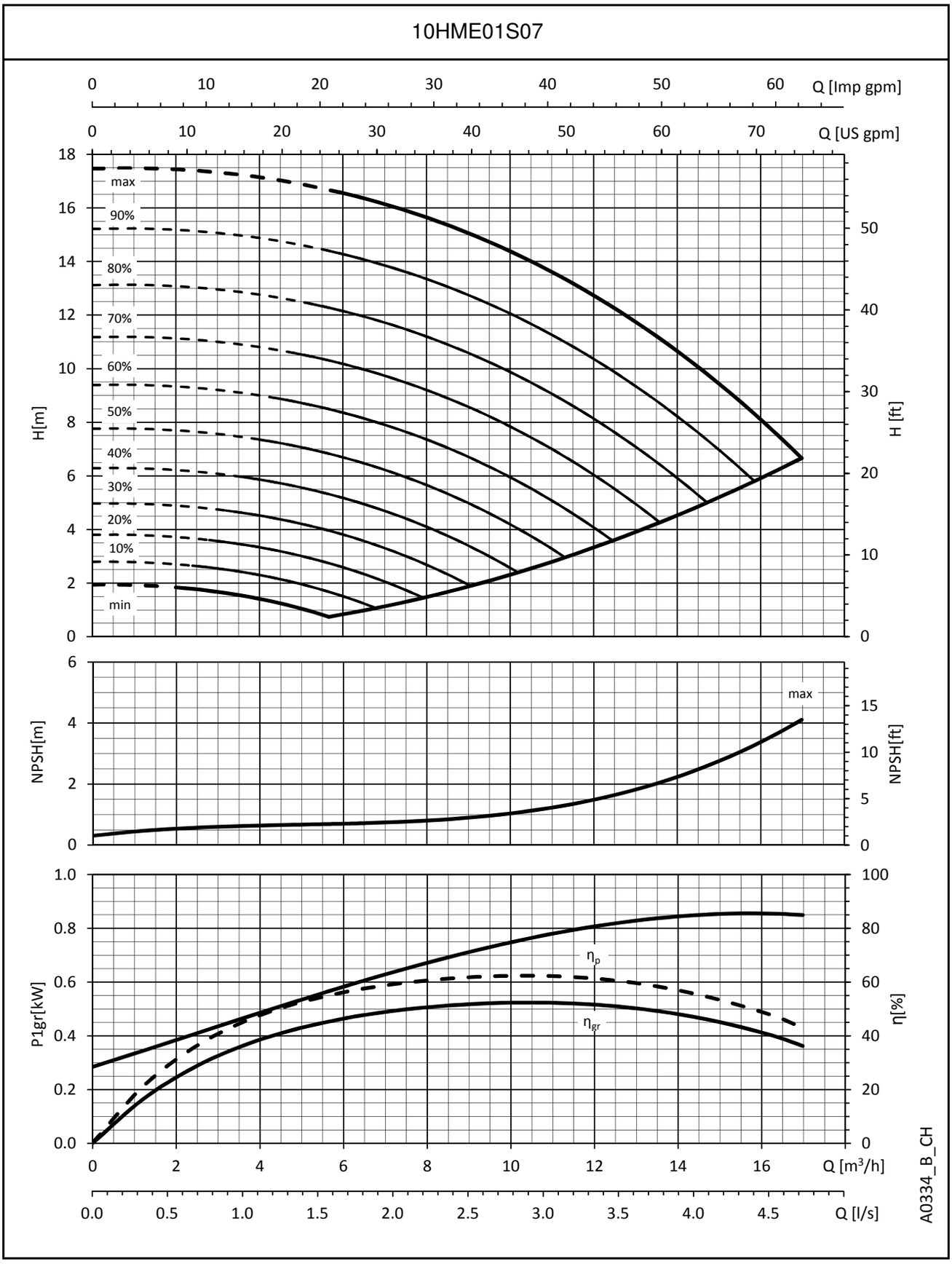

The performances are valid for liquid with density ρ = 1 Kg/dm³ and kinematic viscosity ν = 1 mm²/sec.

10HME..S SERIES
OPERATING CHARACTERISTICS

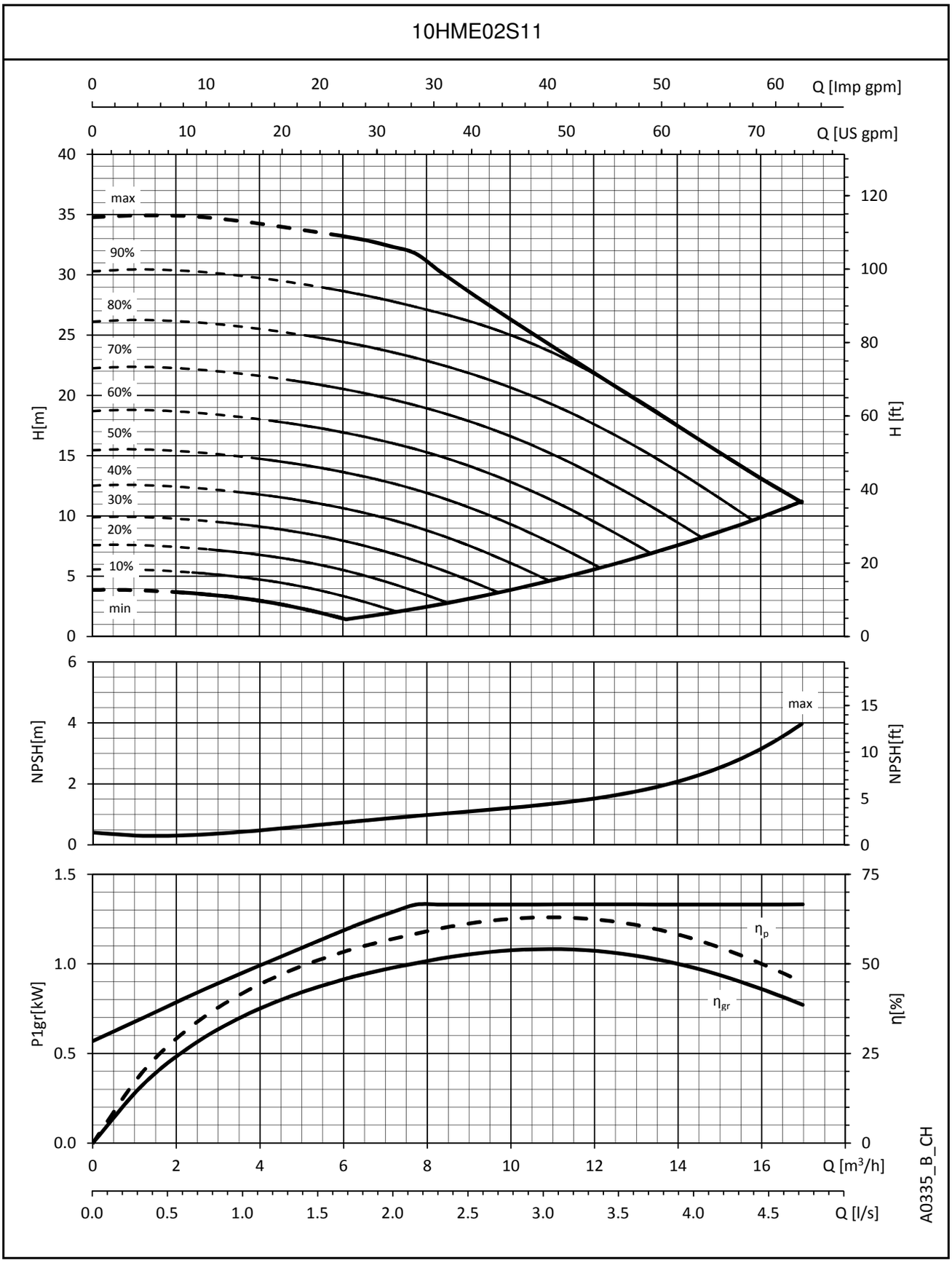

The performances are valid for liquid with density ρ = 1 Kg/dm³ and kinematic viscosity ν = 1 mm²/sec.

10HME..S SERIES
OPERATING CHARACTERISTICS

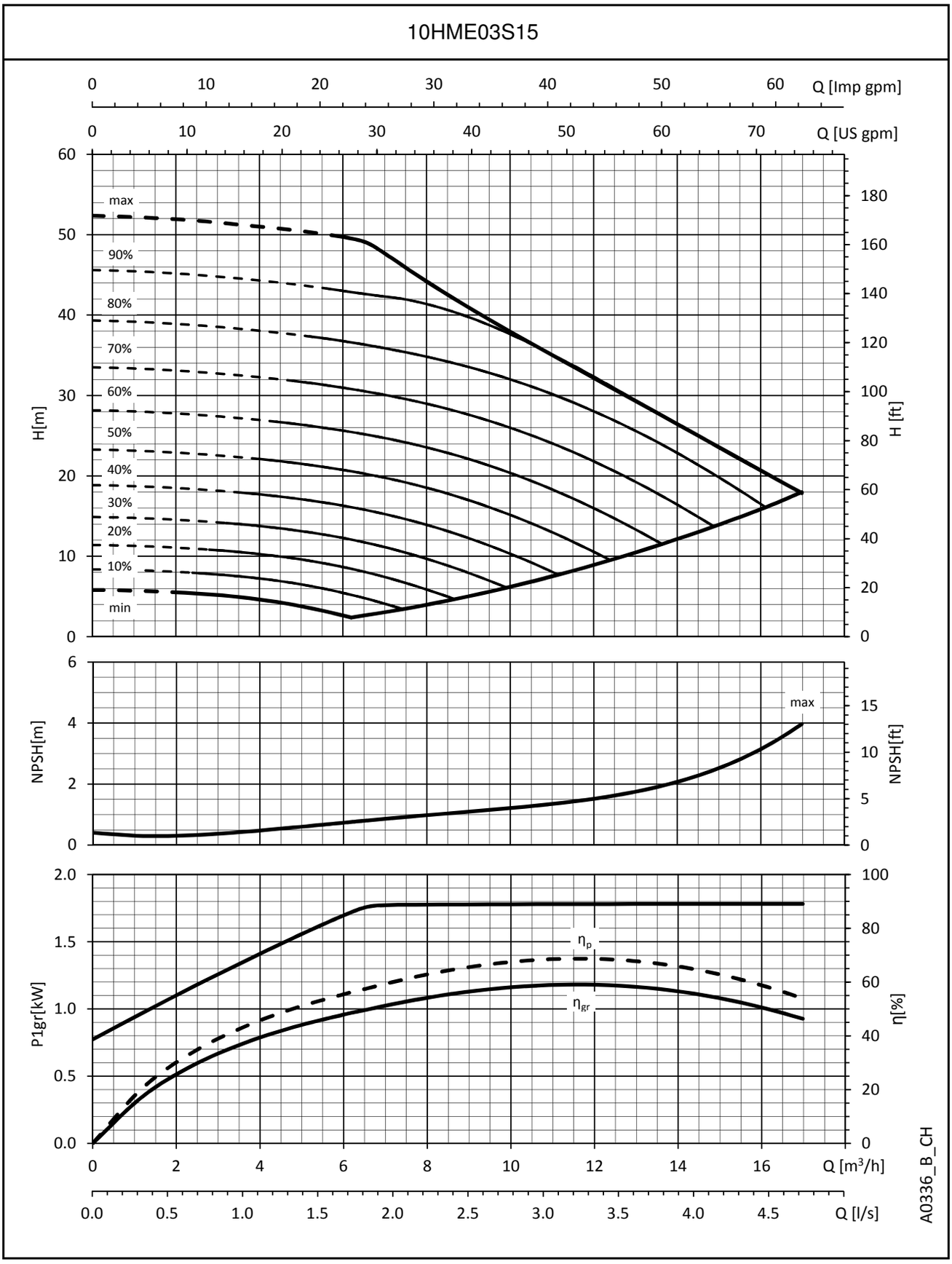

The performances are valid for liquid with density ρ = 1 Kg/dm³ and kinematic viscosity ν = 1 mm²/sec.

10HME..S SERIES
OPERATING CHARACTERISTICS

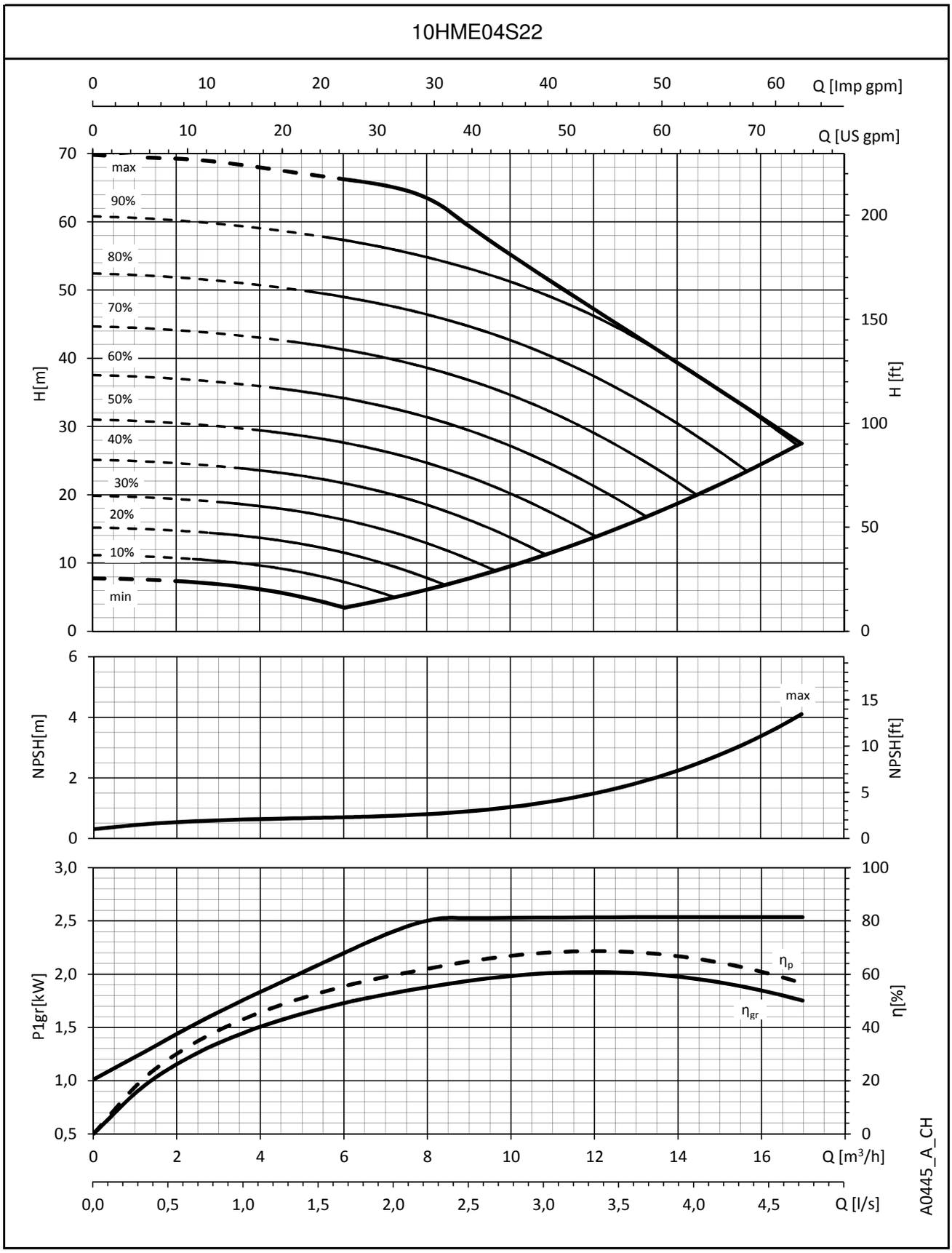

The performances are valid for liquid with density ρ = 1 Kg/dm³ and kinematic viscosity ν = 1 mm²/sec.

15HME..S SERIES
OPERATING CHARACTERISTICS

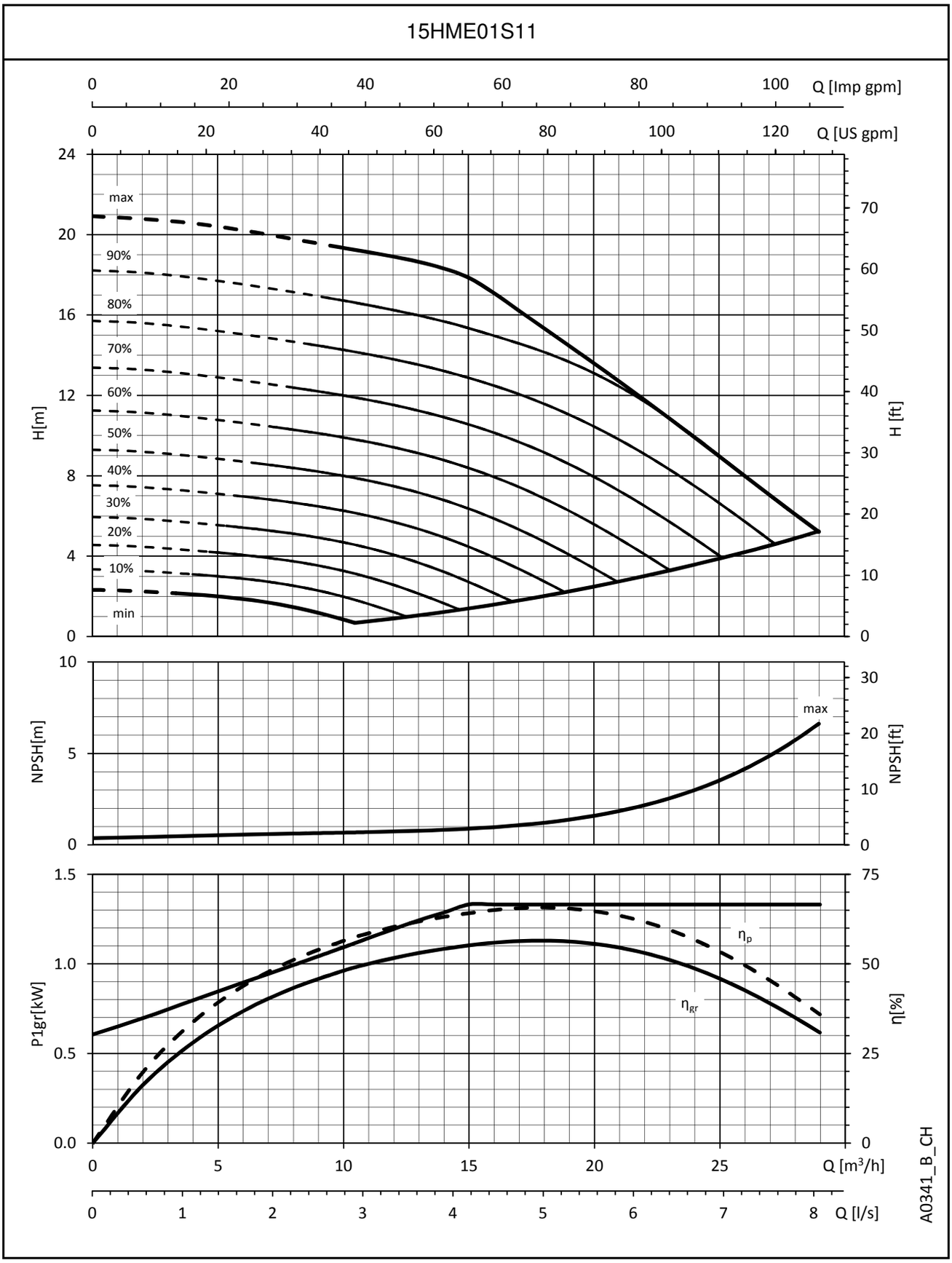

The performances are valid for liquid with density ρ = 1 Kg/dm³ and kinematic viscosity ν = 1 mm²/sec.

15HME..S SERIES
OPERATING CHARACTERISTICS

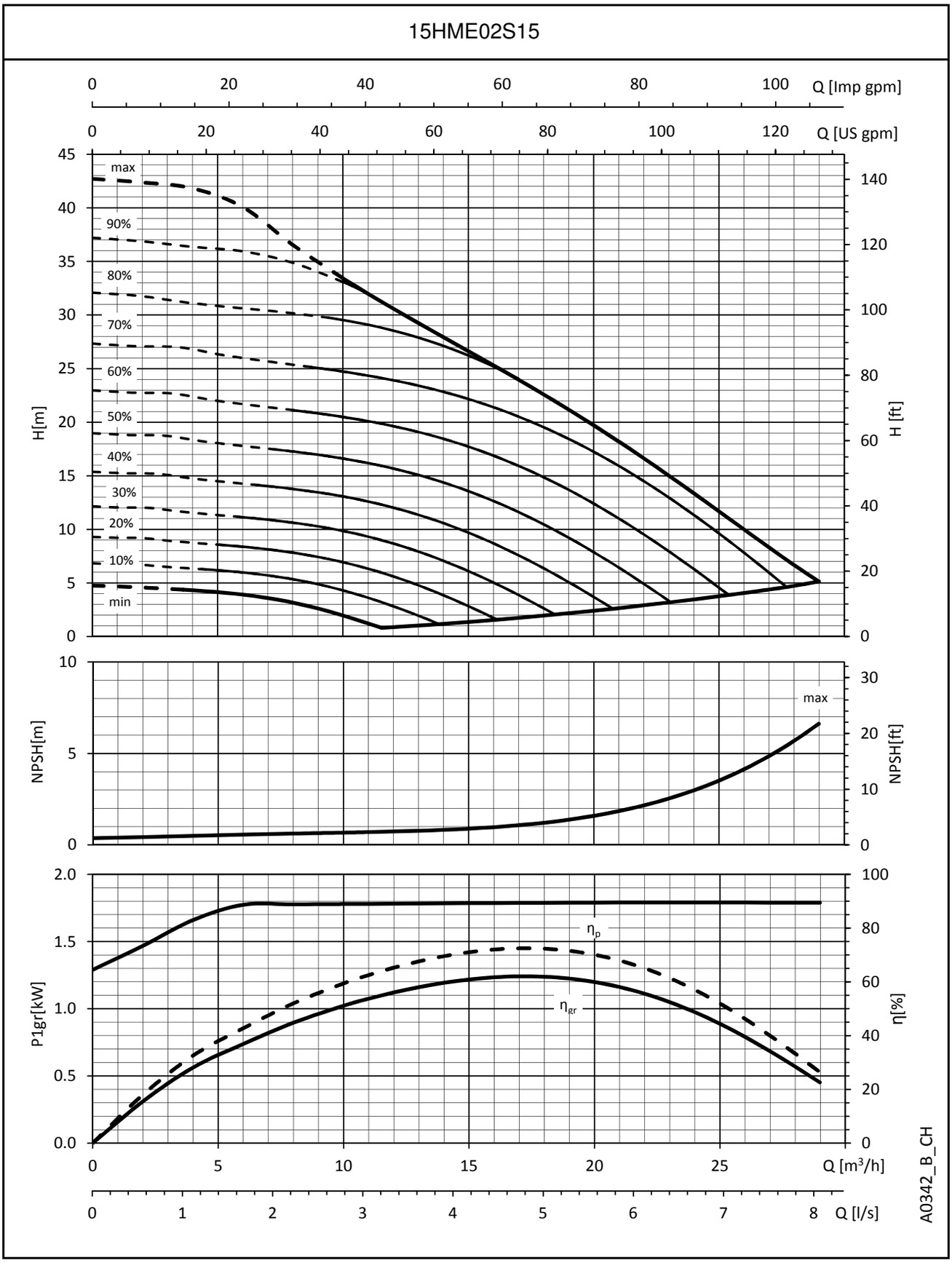

The performances are valid for liquid with density ρ = 1 Kg/dm³ and kinematic viscosity ν = 1 mm²/sec.

15HME..S SERIES
OPERATING CHARACTERISTICS

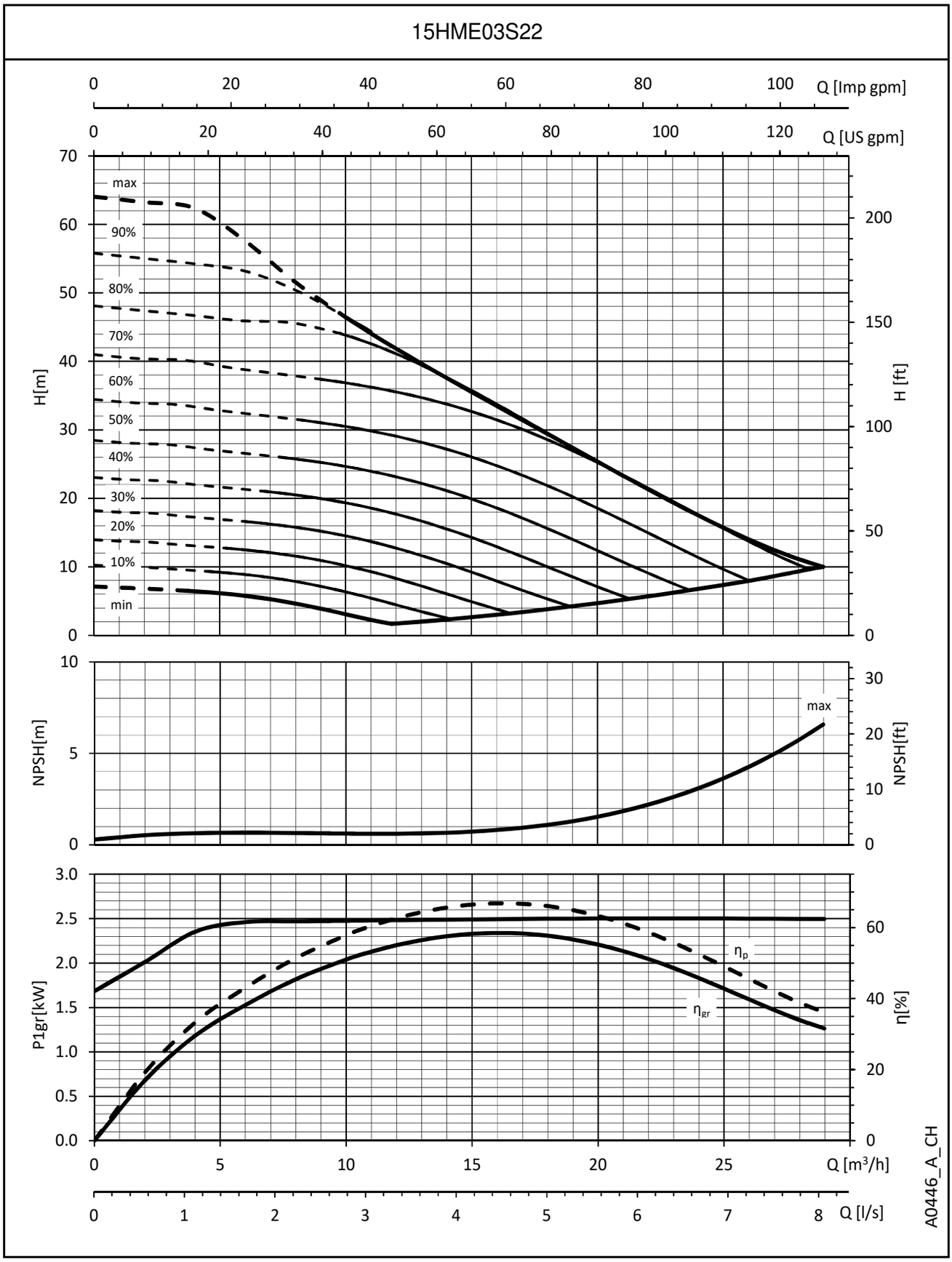

The performances are valid for liquid with density ρ = 1 Kg/dm³ and kinematic viscosity ν = 1 mm²/sec.

e-HMX, e-HMK: VERSION WITH hydrovar X

e-HMX, e-HMK SERIES
e-HM WITH hydrovar X

Background and context

Xylem is a leading global water technology company committed to solving critical water and infrastructure challenges with innovation.
By providing smart and cutting-edge technology, we are reducing energy consumption to minimum possible levels and increasing sustainability.
There is one thing that Xylem shares with the greatest engineering innovators, that's the continuous investment into new products that reflects into outstanding solutions.
You can find all these features in **hydrovar X**, the answer to innovation, sustainability and easiness all-in-one.

hydrovar X also brings the best energy efficiency performances with its frequency converter coupled with the ultimate synchronous motor, manufactured by Xylem integrating decades of expertise and know-how in pumping solutions.

It's the right combination of motors, variable speed drive and pump ensuring great performance, maximum savings and a rapid return on investment.

Sustainability
hydrovar X brings green technology solution by providing best-in-class performance achievement
Rare earths? No thanks! Xylem accepted the challenge to fight price, availability and environmental concerns with a smarter technology that provides the best-in-class performance with a green heart.

Ease of use and commissioning
The built-in application software makes it the easiest drive to commission, program and operate, enabling virtually any configuration of pumps. Backward compatibility assures the **hydrovar X** will work seamlessly with existing systems.

Pump solution
Integrated pump functions provide protection for the pump solution, and improve the quality of energy from the grid. All of this means terrific energy savings from a compact, easy-to-use solution suited for nearly any application.

Application sectors

- Industrial installations
- Air conditioning
- Water supply systems in residential buildings
- Water treatment plants



hydrovar X (HMK), hydrovar X+ (HMX)

- IES2 efficiency level (IEC 61800-9-2:2017)
- Three-phase power supply:
  from 3 kW to 5,5 kW: 380-480 V +/- 10%, 50/60 Hz
- Power up to 5,5 kW
- Protection class IP 55
- Overload and locked rotor protection with automatic reset incorporated
- Can be linked up to 4 e-HM hydrovar X, up to 8 e-HM hydrovar X+ pumps

Pump

- Flow rate: up to 34 m^3/h
- Head: up to 160 m
- Maximum operating pressure 16 bar (PN 16)
- Temperature of pumped liquid: up to +120°C
- The hydraulic performances meet the tolerances specified in ISO 9906:2012

Motor

- IE5 efficiency level (IEC TS 60034-30-2:2016)
- Synchronous electric motor with permanent magnet assisted reluctance technology, closed structure, air-cooled (TEFC)
- Insulation class 155 (F)
- Environment temperature: -20°C to +50°C with no performance derating

Regulations (EU) 2019/1781 e 2021/341 Annex I – point 4

(Product information)
The requirements shall not apply to these variable speed drives, as they are integrated to motors, that aren't covered by the same regulations.

e-HMX, e-HMK SERIES
e-HM WITH hydrovar X

hydrovar X offers two different display configurations: LED display and graphical colored display, like in the below pictures:

hydrovar X (HMK)



hydrovar X+ (HMX)



e-HMK SERIES (hydrovar X)
TERMINAL BLOCK

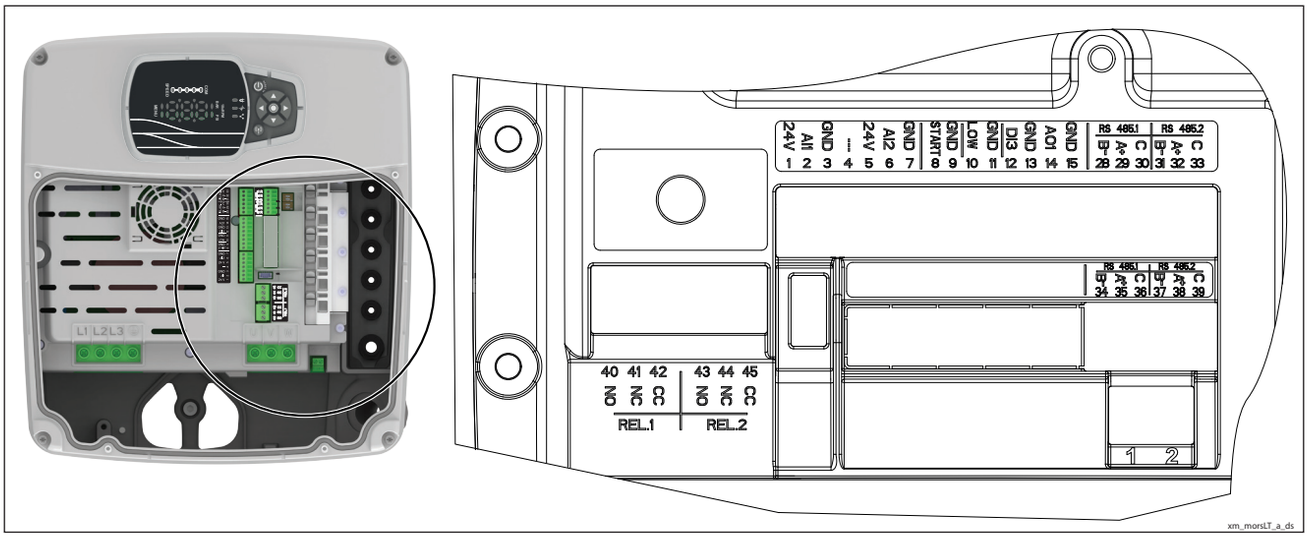

REF.	ITEM	DESCRIPTION	DEFAULT
1	Analog Input 1	Power supply +24 VDC, max. 60mA (total, terminals 1 + 5)	Pressure Sensor 1
2		Configurable Analog Input 1	
3		Electronic GND	
4	Not used	Internal use - Do not connect	
5	Analog Input 2	Power supply +24 VDC, max. 60mA (total, terminals 1 + 5)	Not used
6		Configurable Analog Input 2	
7		Electronic GND	
8	External Start/Stop	Start/Stop digital input, +24 VDC internal pull-up, 6mA contact current	-
9		Electronic GND	
10	External Lack of Water	Low water digital input, +24 VDC internal pull-up, 6mA contact current	-
11		Electronic GND	
12	Digital Input 3	Configurable Digital Input 3, +24 VDC internal pull-up, 6mA contact current	Solo Run
13		Electronic GND	
14	Analog Output	Configurable Analog Output	Motor Speed
15		Electronic GND	
28	Communication bus 1	RS485 port 1: RS485-1B N (-)	Multipump
29		RS485 port 1: RS485-1A P (+)	
30		RS485 port 1: RS485-COM	
31	Communication bus 2	RS485 port 2: RS485-2B N (-)	Modbus
32		RS485 port 2: RS485-2A P (+)	
33		RS485 port 2: RS485-COM	
34	Communication bus 1	RS485 port 1: RS485-1B N (-)	Multipump
35		RS485 port 1: RS485-1A P (+)	
36		RS485 port 1: RS485-COM	
37	Communication bus 2	RS485 port 2: RS485-2B N (-)	Modbus
38		RS485 port 2: RS485-2A P (+)	
39		RS485 port 2: RS485-COM	
40	Relay 1	Configurable relay 1: Normally Open	Error
41		Configurable relay 1: Normally Closed	
42		Configurable relay 1: Common Contact	
43	Relay 2	Configurable relay 2: Normally Open	Running
44		Configurable relay 2: Normally Closed	
45		Configurable relay 2: Common Contact	

xm_morsLT-en_a_sc

e-HMX SERIES (hydrovar X+)
TERMINAL BLOCK

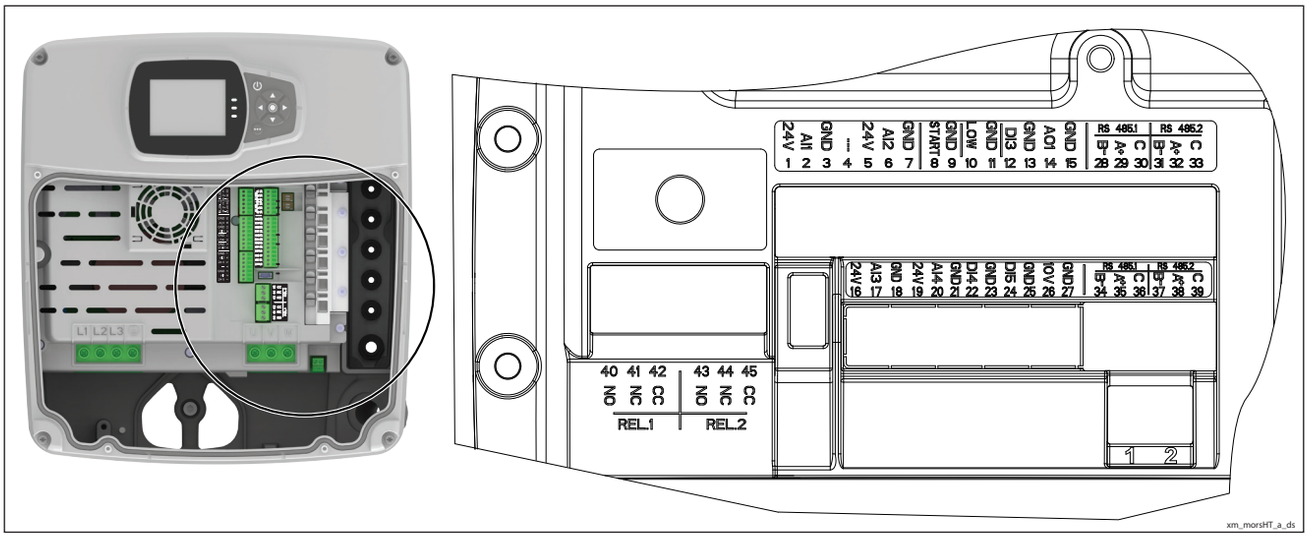

REF.	ITEM	DESCRIPTION	DEFAULT
1	Analog Input 1	Power supply +24 VDC, max. 60mA (total, terminals 1 + 5)	Pressure Sensor 1
2		Configurable Analog Input 1	
3		Electronic GND	
4	Not used	Internal use - Do not connect	
5	Analog Input 2	Power supply +24 VDC, max. 60mA (total, terminals 1 + 5)	Not used
6		Configurable Analog Input 2	
7		Electronic GND	
8	External Start/Stop	Start/Stop digital input, +24 VDC internal pull-up, 6mA contact current	-
9		Electronic GND	
10	External Lack of Water	Low water digital input, +24 VDC internal pull-up, 6mA contact current	-
11		Electronic GND	
12	Digital Input 3	Configurable Digital Input 3, +24 VDC internal pull-up, 6mA contact current	Solo Run
13		Electronic GND	
14	Analog Output	Configurable Analog Output	Motor Speed
15		Electronic GND	
16	Analog Input 3	Power supply +24 VDC, max. 60mA (total, terminals 16 and 19)	Not used
17		Configurable Analog Input 3	
18		Electronic GND	
19	Analog Input 4	Power supply +24 VDC, max. 60mA (total, terminals 16 and 19)	Not used
20		Configurable Analog Input 4	
21		Electronic GND	
22	Digital Input 4	Configurable Digital Input 4, +24 VDC internal pull-up, 6mA contact current	Not used
23		Electronic GND	
24	Digital Input 5	Configurable Digital Input 5, +24 VDC internal pull-up, 6mA contact current	Not used
25		Electronic GND	
26	10 VDC supply	Power supply +10 VDC, max. 3mA	-
27		Electronic GND	
28	Communication bus 1	RS485 port 1: RS485-1B N (-)	Multipump
29		RS485 port 1: RS485-1A P (+)	
30		RS485 port 1: RS485-COM	
31	Communication bus 2	RS485 port 2: RS485-2B N (-)	Modbus
32		RS485 port 2: RS485-2A P (+)	
33		RS485 port 2: RS485-COM	
34	Communication bus 1	RS485 port 1: RS485-1B N (-)	Multipump
35		RS485 port 1: RS485-1A P (+)	
36		RS485 port 1: RS485-COM	
37	Communication bus 2	RS485 port 2: RS485-2B N (-)	Modbus
38		RS485 port 2: RS485-2A P (+)	
39		RS485 port 2: RS485-COM	
40	Relay 1	Configurable relay 1: Normally Open	Running
41		Configurable relay 1: Normally Closed	
42		Configurable relay 1: Common Contact	
43	Relay 2	Configurable relay 2: Normally Open	Error
44		Configurable relay 2: Normally Closed	
45		Configurable relay 2: Common Contact	

xm_morsHT-en_a_sc

e-HMX, e-HMK SERIES
HOW TO READ CURVES OF e-HM WITH hydrovar X

To exploit to the maximum potential of these pumps it's important to properly read working curves:

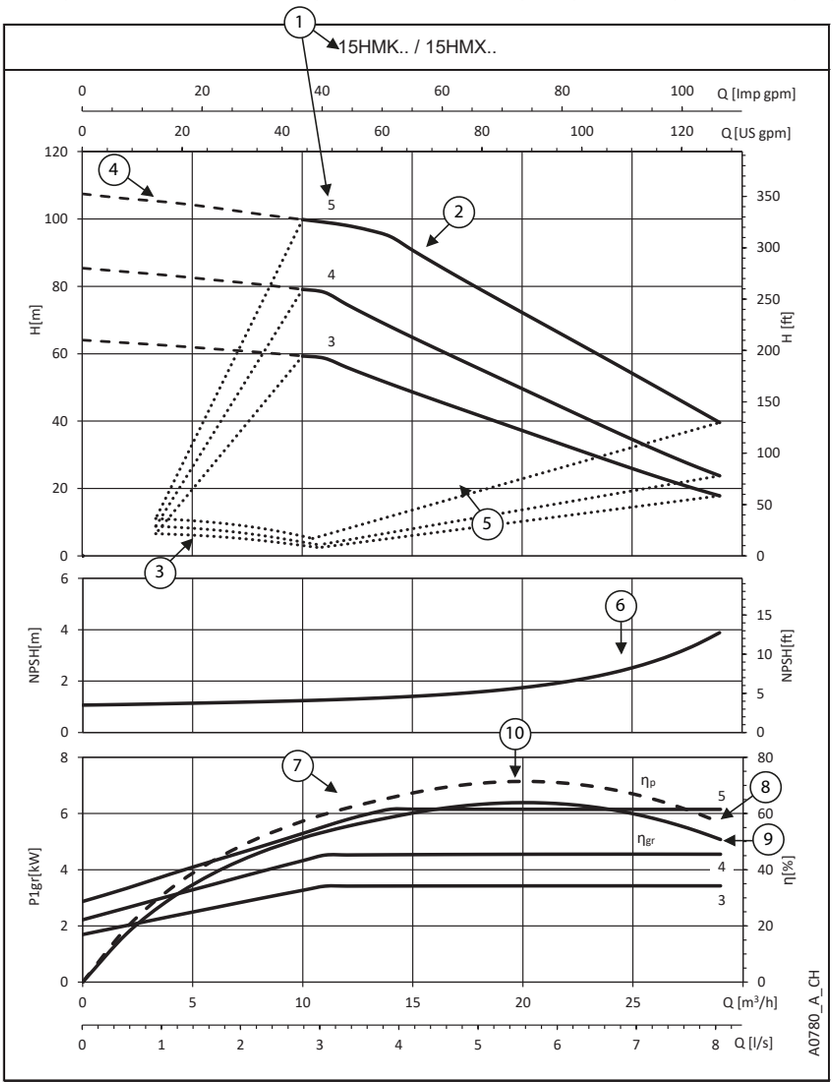

hydrovar X is equipped with a 5-LEDs "SPEED" bar. Each LED indicates a percentage of the system speed between minimum and maximum speed.



hydrovar X+
For maximum precision on the working point it is sufficient to read the display.



① **Pump model and number of stages**

② **Maximum curve** (100%): equal to 3600 rpm or pump running at nominal power

③ **Minimum curve** (0%): it refers to the minimum rpm level the motor can work at, it's calculated depending on the model of pump maximizing for each one the working area and allowing the highest system flexibility.

④ The **area within dotted lines** is where the pump can only operate intermittently for short periods of time.

⑤ The **allowable operating range** (AOR) of the pump is defined by the minimum and maximum head capacity curves as well as the minimum and maximum flow rates for a given speed.

⑥ **NPSH**: is the net positive suction head of pump+motor+drive system working at maximum speed.

⑦ **$P1_{gr}$** is the power absorption in kW of pump+motor+drive system working at maximum speed. The curve increases until the unit reaches the power limit.
hydrovar X controls power consumption (flat part of the curve) at high flow/low head. In this way the motor stays protected from overload and ensure a longer life of pump+motor+drive system.

⑧ **η_p** is the efficiency of the hydraulic part, working at maximum speed.

⑨ **η_{gr}** is the efficiency of pump+motor+drive system working at maximum speed.

⑩ **Working point**: it's important to make sure the pump is working at the best working point, the one at highest efficiency.
It's easy to find it: it's the highest point of the ηp pump efficiency curve; once you found it, you can learn also flow values from x-axis called Q and head values from y-axis called H which allow the system to work at the best working point.

e-HMX, e-HMK SERIES
HYDRAULIC PERFORMANCES TABLE

PUMP TYPE	MOTOR		Q = DELIVERY							
			l/min 0	26,7	53,3	80,0	106,7	133,3	160,0	170,0
HMX	P_N	TYPE	m^3/h 0	1,6	3,2	4,8	6,4	8,0	9,6	10,2
HMK	kW		H = TOTAL HEAD IN METRES OF COLUMN OF WATER							
5HM..14	3	EXM90HMHB/..030B	155,2	156,8	152,3	144,2	119,1	93,2	66,6	56,4

PUMP TYPE	MOTOR		Q = DELIVERY							
			l/min 0	43,3	86,7	130,0	173,3	216,7	260,0	283,3
HMX	P_N	TYPE	m^3/h 0	2,6	5,2	7,8	10,4	13,0	15,6	17,0
HMK	kW		H = TOTAL HEAD IN METRES OF COLUMN OF WATER							
10HM..06	3	EXM90HMHC/..030B	104,7	103,4	100,7	89,7	73,6	58,7	43,7	35,6
10HM..08	4	EXM100HMHC/..040B	139,6	137,9	134,3	119,6	98,1	78,2	58,2	47,4
10HM..09	5,5	EXM112HMHC/..055B	160,2	157,8	154,4	148,6	134,3	109,9	86,7	74,3

PUMP TYPE	MOTOR		Q = DELIVERY							
			l/min 0	70,0	140,0	210,0	280,0	350,0	420,0	483,3
HMX	P_N	TYPE	m^3/h 0	4,2	8,4	12,6	16,8	21,0	25,2	29,0
HMK	kW		H = TOTAL HEAD IN METRES OF COLUMN OF WATER							
15HM..03	3	EXM90HMHC/..030B	64,0	62,3	60,3	54,5	44,5	35,0	25,5	17,8
15HM..04	4	EXM100HMHC/..040B	85,4	83,1	80,4	72,7	59,4	46,6	34,0	23,7
15HM..05	5,5	EXM112HMHC/..055B	107,4	104,8	101,1	97,3	83,9	68,6	53,5	39,5

PUMP TYPE	MOTOR		Q = DELIVERY							
			l/min 0	83,3	166,7	250,0	333,3	416,7	500,0	566,7
HMX	P_N	TYPE	m^3/h 0	5,0	10,0	15,0	20,0	25,0	30,0	34,0
HMK	kW		H = TOTAL HEAD IN METRES OF COLUMN OF WATER							
22HM..02	3	EXM90HMHC/..030B	44,5	44,4	43,2	41,6	36,8	28,7	19,5	11,4
22HM..03	4	EXM100HMHC/..040B	67,5	66,2	64,7	61,8	50,4	38,7	27,5	18,9
22HM..04	5,5	EXM112HMHC/..055B	89,8	89,3	86,6	84,1	71,4	57,3	42,3	29,5

hmx-hmk-en_a_th

hydrovar X, hydrovar X+
ELECTRICAL DATA TABLE

The nominal motor power is guaranteed in the 3000-3600 rpm range. The motor is automatically limited to 3600 rpm maximum; the motor works partially loaded below 3000 rpm.

P_N kW	MOTOR TYPE	IEC SIZE*	Construction Design	SPEED (RPM)** min^{-1}	INPUT CURRENT I (A) 380-480 V	DATA RELATED TO THE VOLTAGE OF 400V In A	cosφ	Tn Nm	η % 4/4	η % 3/4	η % 2/4	IES
3	EXM90HMHB/4.030B EXM90HMHC/4.030B	100	SPECIAL	3000	6,74-5,18	5,79	0,86	9,55	87,5	87,3	86,2	2
				3600		5,71		7,96	87,8	87,6	85,8	
				4000		5,72		7,16	87,7	87,4	85,5	
4	EXM100HMHC/4.040B	112		3000	7,73-6,42	7,34	0,90	12,7	87,5	88,0	87,5	2
				3600		7,23		10,6	88,5	88,6	87,3	
				4000		7,30		9,55	88,0	88,2	86,6	
5,5	EXM112HMHC/4.055B	132		3000	10,1-8,22	9,51	0,92	17,5	90,0	89,7	88,9	2
				3600		9,63		14,6	89,4	89,5	88,7	
				4000		9,58		13,1	89,5	89,0	87,6	

** The indicated rotational speed are representing the upper and lower limits of the rated power operational speed range.

HM-XM_mott-en_a_te

Note. **IES** refers to the efficiency class for frequency converter + motor systems (known as power transmission systems-PDS) with power between 0.12 kW and 1000 kW and between 100 V and 1000 V, according to the standard **EN 50598-2:2014**.

e-HMX, e-HMK SERIES
DIMENSIONS AND WEIGHTS

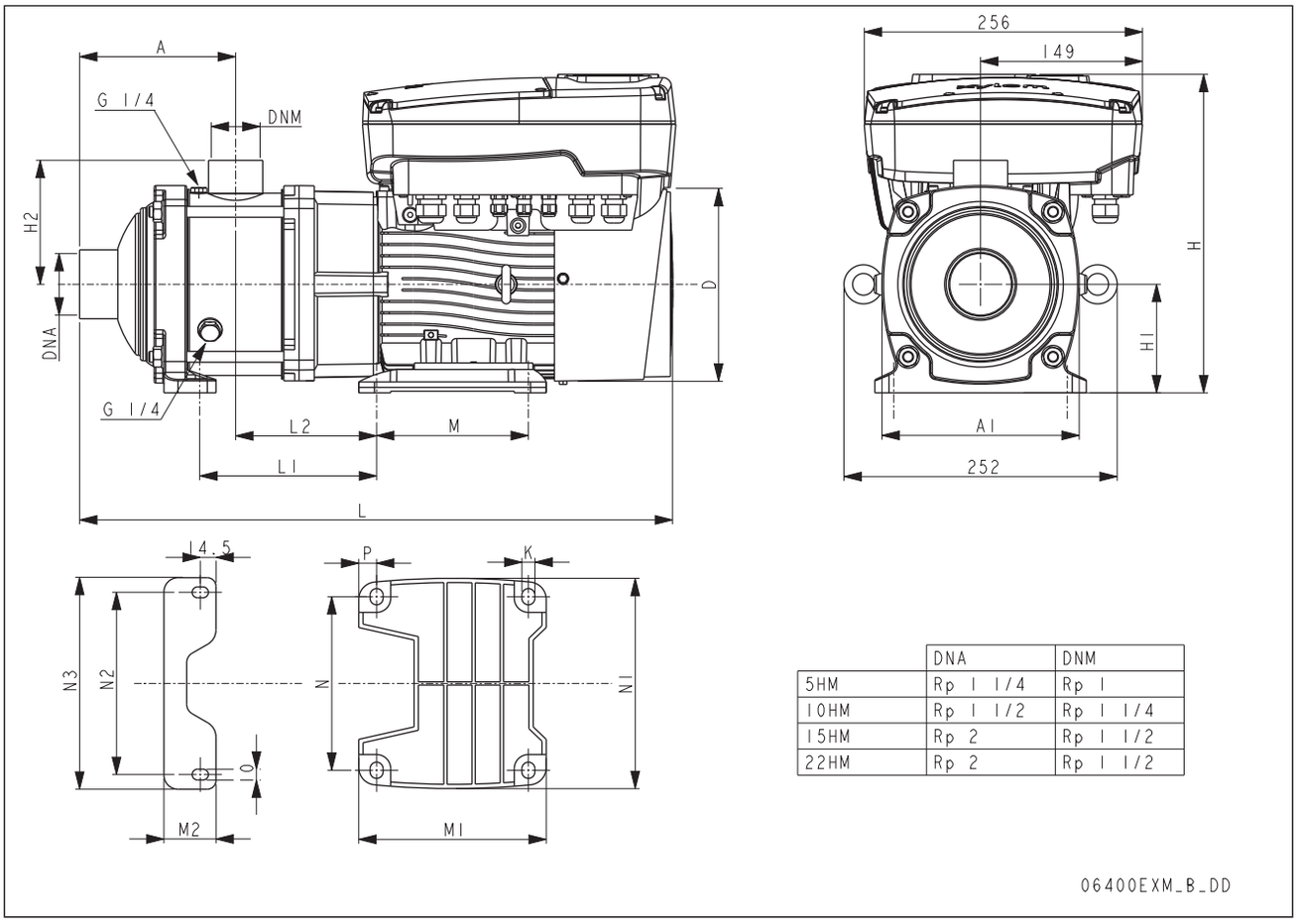

	DNA	DNM
5HM	Rp 1 1/4	Rp 1
10HM	Rp 1 1/2	Rp 1 1/4
15HM	Rp 2	Rp 1 1/2
22HM	Rp 2	Rp 1 1/2

PUMP TYPE	MOTOR		DIMENSIONS (mm)																			WEIGHT
HMX, HMK	kW	Size	A	A1	H	H1	H2	D	L	L1	L2	M	M1	M2	N	N1	N2	N3	P	K	PN	(kg)
5HM..14	3	B	358	146	284	90	94	174	746	375	121	125	156	45	140	174	140	165	16	10	16	32,4
10HM..06	3	B	221	182	284	90	113	174	610	234	122	125	156	48	140	174	168	195	16	10	16	33,4
10HM..08	4	B	285	182	294	100	113	174	674	290	114	140	173	48	160	194	168	195	17	12	16	35,4
10HM..09	5,5	B	317	182	306	112	113	197	706	330	121	140	177	48	190	230	168	195	8,5	12	16	36,4
15HM..03	3	B	144	182	284	90	114	174	549	170	138	125	156	48	140	174	168	195	16	10	10	30,4
15HM..04	4	B	192	182	294	100	114	174	597	210	130	140	173	48	160	194	168	195	17	12	10	31,4
15HM..05	5,5	B	240	182	306	112	114	197	645	266	137	140	177	48	190	230	168	195	8,5	12	16	33,4
22HM..02	3	B	144	182	284	90	114	174	549	170	138	125	156	48	140	174	168	195	16	10	10	30,4
22HM..03	4	B	144	182	294	100	114	174	549	162	130	140	173	48	160	194	168	195	17	12	10	30,4
22HM..04	5,5	B	192	182	306	112	114	197	597	218	137	140	177	48	190	230	168	195	8,5	12	10	31,4

hmx-en_a_td

e-HMX, e-HMK SERIES
OPERATING CHARACTERISTICS

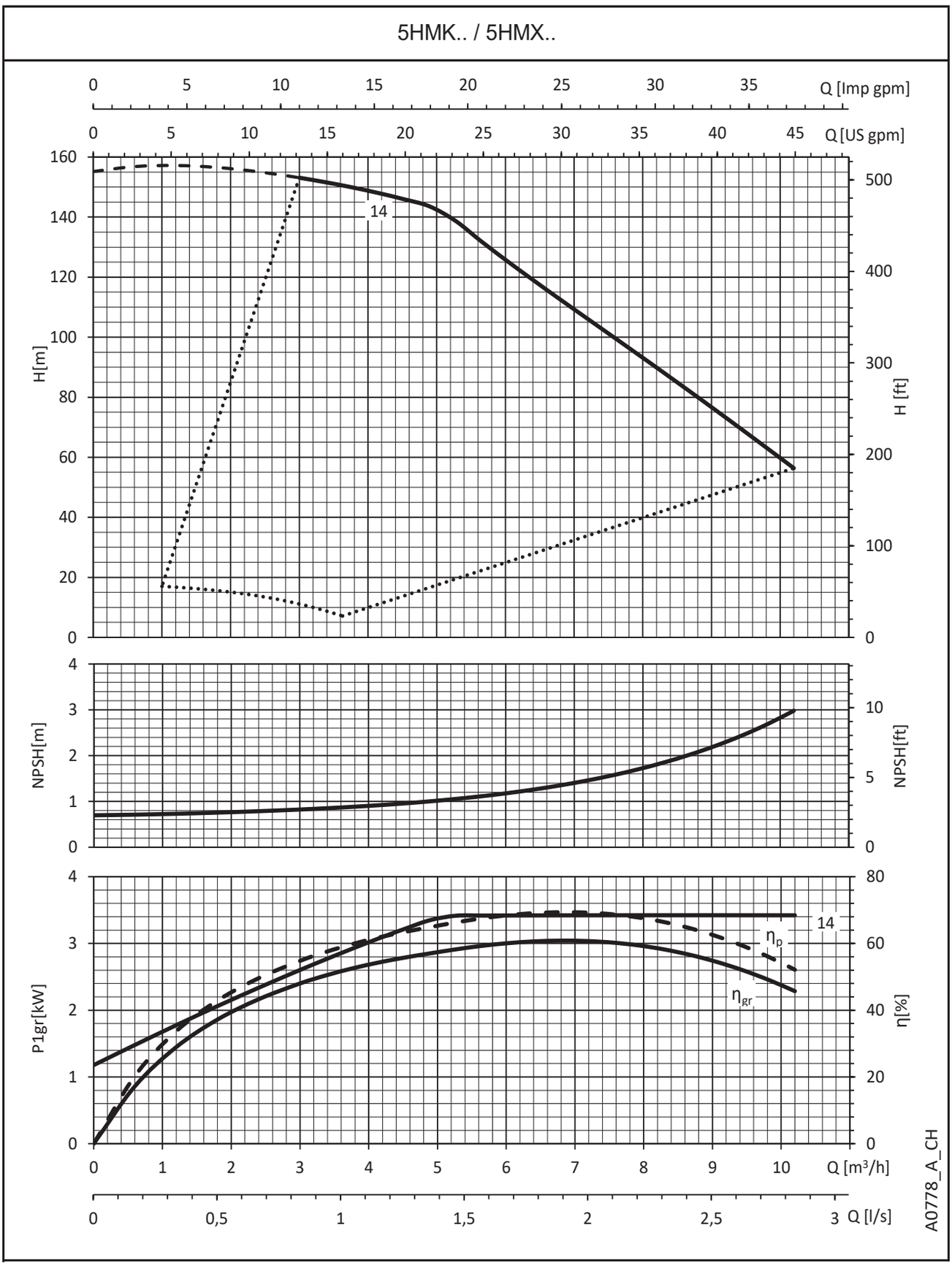

The performances are valid for liquid with density ρ = 1.0 Kg/dm³ and kinematic viscosity ν = 1 mm²/sec.

e-HMX, e-HMK SERIES
OPERATING CHARACTERISTICS

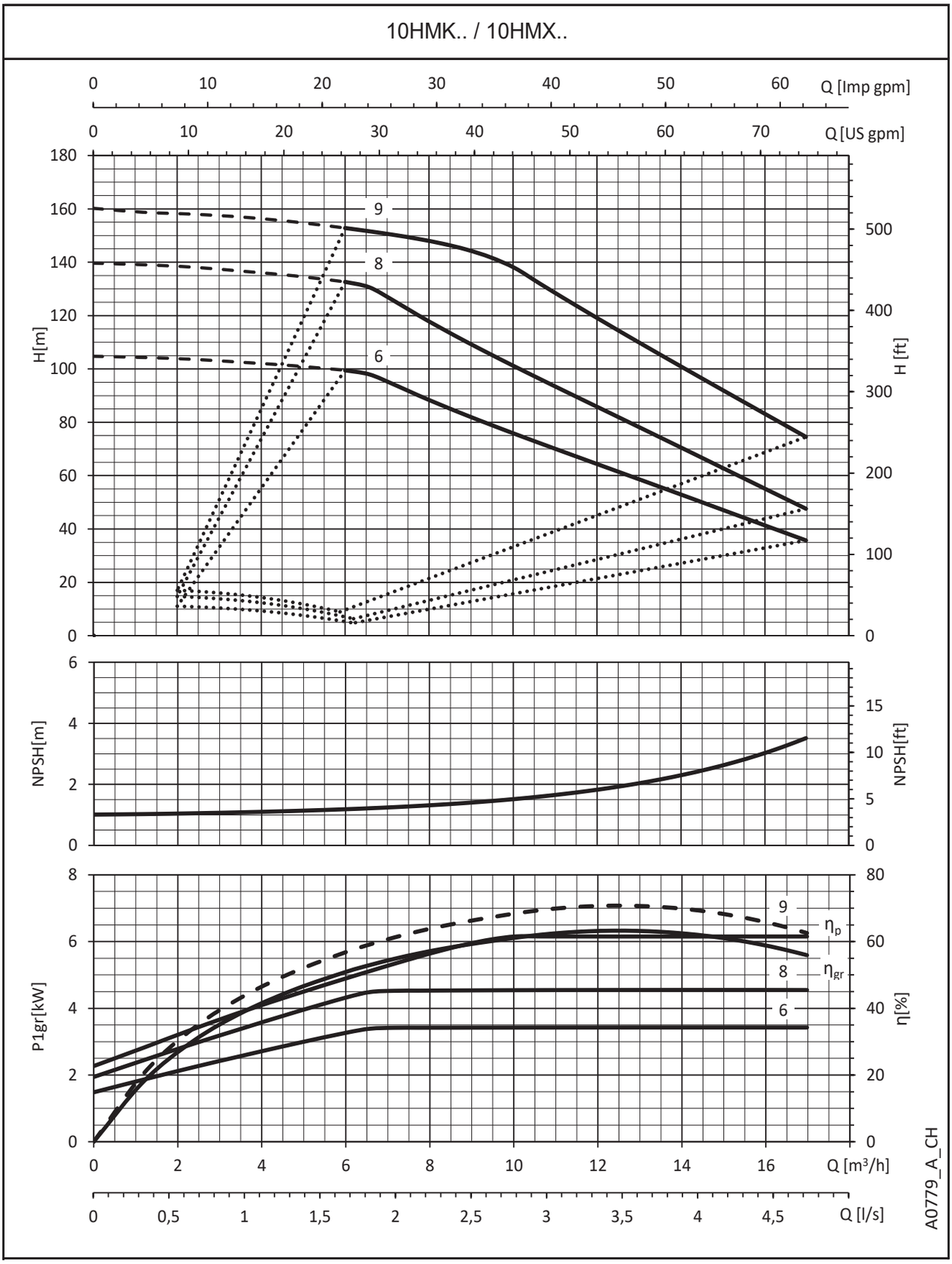

The performances are valid for liquid with density ρ = 1.0 Kg/dm³ and kinematic viscosity ν = 1 mm²/sec.

e-HMX, e-HMK SERIES
OPERATING CHARACTERISTICS

15HMK.. / 15HMX..

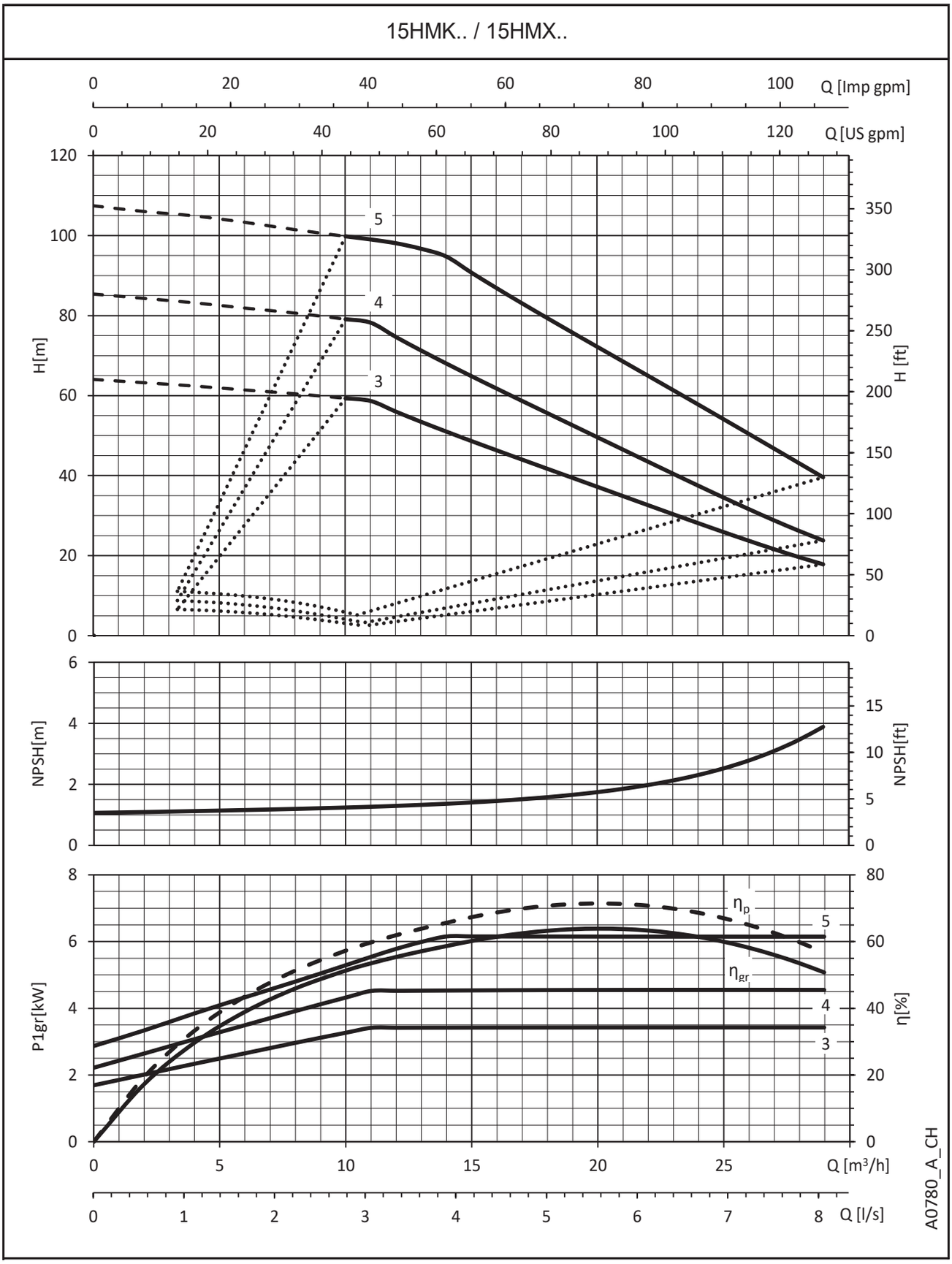

The performances are valid for liquid with density ρ = 1.0 Kg/dm³ and kinematic viscosity ν = 1 mm²/sec.

e-HMX, e-HMK SERIES
OPERATING CHARACTERISTICS

22HMK.. / 22HMX..

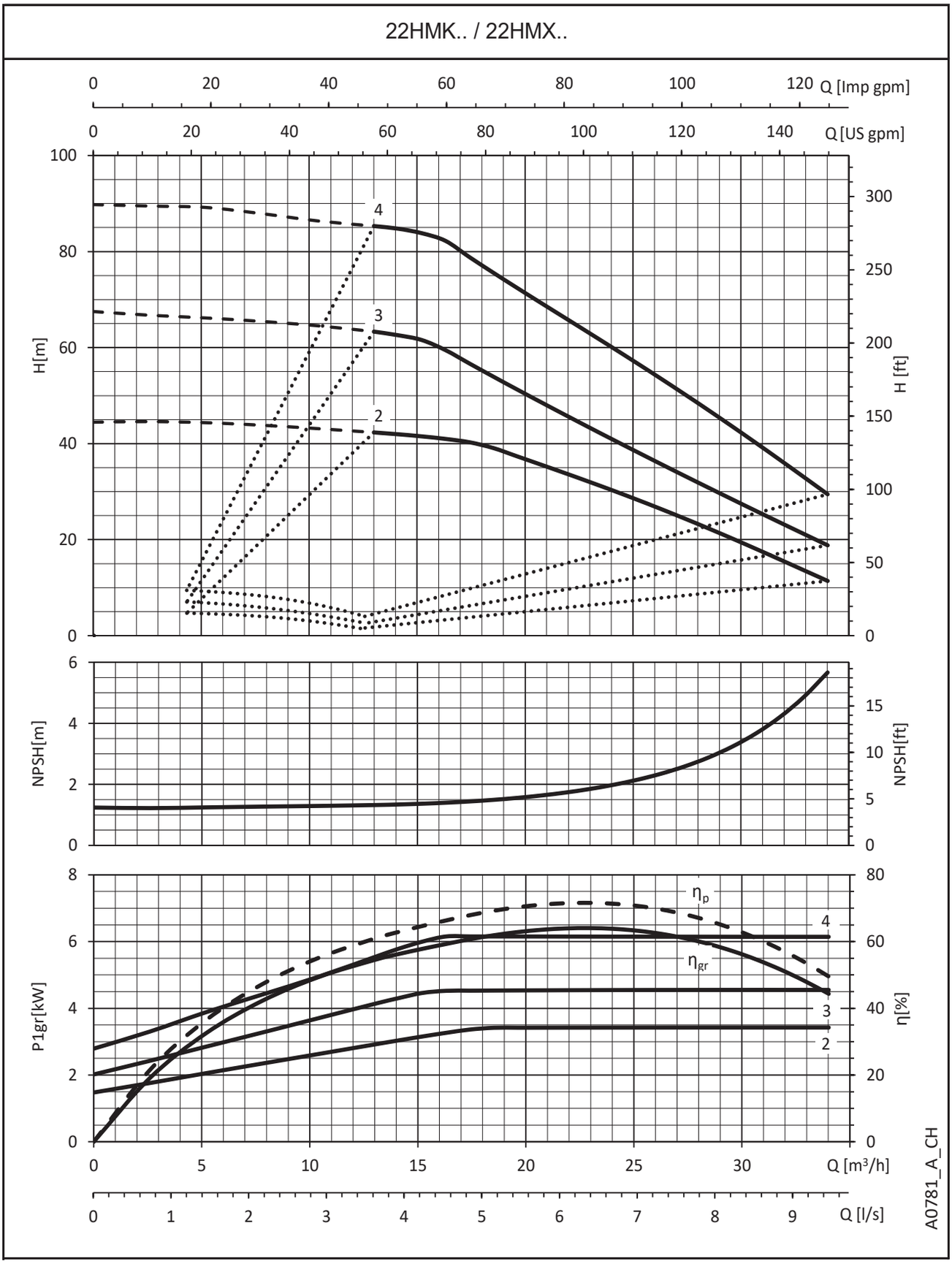

The performances are valid for liquid with density ρ = 1.0 Kg/dm³ and kinematic viscosity ν = 1 mm²/sec.

REPORTS AND DECLARATIONS

REPORTS AND DECLARATIONS

i) Test reports

a) **Factory Test Report** (Lowara identity code: 1A)
(not available for all pump types; contact Customer Service in advance)
- Test report compiled at the end of the assembly line, including flow-head performance test (ISO 9906:2012 – Grade 3B) and tightness test.

b) **Audit Test Report** (Lowara identity code: 1B)
- Test report for electric pumps compiled in the test room, comprising flow-head-pump input-pump efficiency performance test (ISO 9906:2012 – Grade 3B)

c) **NPSH Test Report** (Lowara identity code: 1B / CTF-NP)
(unavailable for submerged or submergible pumps)
- Test report for electric pumps compiled in the test room, comprising flow-NPSH performance test (ISO 9906:2012 – Grade 3B)

d) **Noise Test Report** (Lowara identity code: 1B / CTF-RM)
(unavailable for submerged pumps)
- Report indicating sound pressure and power measurements (EN ISO 20361, EN ISO 11203, EN ISO 4871) using the
  - intensimetric (EN ISO 9614-1, EN ISO 9614-2), or
  - phonometric method.

e) **Vibration Test Report**
(unavailable for submerged or submersible pumps)
- Report indicating vibration measurements (ISO 10816-1)

ii) Declaration of product conformity with the technical requirements indicated in the order

a) **EN 10204:2004 - type 2.1** (Lowara identity code: CTF-21)
- does not include test results on supplied or similar products.

b) **EN 10204:2004 - type 2.2** (Lowara identity code: CTF-22)
- includes test results (materials certificates) on similar products.

iii) Issue of a further EC Declaration of Conformity,
- in addition to the one accompanying the product, it comprises references to European law and the main technical standards (e.g.: MD 2006/42/EC, EMC 2014/30/EU, ErP 2009/125/EC).

N.B.: if the request is made after receipt of the product, communicate the code (name) and serial number (date + progressive number).

iv) Manufacturer's declaration of conformity
- relative to one of more types of products without indicating specific codes and serial numbers.

v) Other certificates and/or documentation on request
- subject to availability or feasibility.

vi) Duplication of certificates and/or documentation on request
- subject to availability or feasibility.

TECHNICAL APPENDIX

NPSH

The minimum operating values that can be reached at the pump suction end are limited by the onset of cavitation.

Cavitation is the formation of vapour-filled cavities within liquids where the pressure is locally reduced to a critical value, or where the local pressure is equal to, or just below the vapour pressure of the liquid.

The vapour-filled cavities flow with the current and when they reach a higher pressure area the vapour contained in the cavities condenses. The cavities collide, generating pressure waves that are transmitted to the walls. These, being subjected to stress cycles, gradually become deformed and yield due to fatigue. This phenomenon, characterized by a metallic noise produced by the hammering on the pipe walls, is called incipient cavitation.

The damage caused by cavitation may be magnified by electrochemical corrosion and a local rise in temperature due to the plastic deformation of the walls. The materials that offer the highest resistance to heat and corrosion are alloy steels, especially austenitic steel. The conditions that trigger cavitation may be assessed by calculating the total net suction head, referred to in technical literature with the acronym NPSH (Net Positive Suction Head).

The NPSH represents the total energy (expressed in m.) of the liquid measured at suction under conditions of incipient cavitation, excluding the vapour pressure (expressed in m.) that the liquid has at the pump inlet.

To find the static height hz at which to install the machine under safe conditions, the following formula must be verified:

hp + hz ≥ (NPSHr + 0.5) + hf + hpv ①

where:

hp is the absolute pressure applied to the free liquid surface in the suction tank, expressed in m. of liquid; hp is the quotient between the barometric pressure and the specific weight of the liquid.

hz is the suction lift between the pump axis and the free liquid surface in the suction tank, expressed in m.; hz is negative when the liquid level is lower than the pump axis.

hf is the flow resistance in the suction line and its accessories, such as: fittings, foot valve, gate valve, elbows, etc.

hpv is the vapour pressure of the liquid at the operating temperature, expressed in m. of liquid. hpv is the quotient between the Pv vapour pressure and the liquid's specific weight.

0,5 is the safety factor.

The maximum possible suction head for installation depends on the value of the atmospheric pressure (i.e. the elevation above sea level at which the pump is installed) and the temperature of the liquid.

To help the user, with reference to water temperature (4° C) and to the elevation above sea level, the following tables show the drop in hydraulic pressure head in relation to the elevation above sea level, and the suction loss in relation to temperature.

Water temperature (°C)	20	40	60	80	90	110	120
Suction loss (m)	0,2	0,7	2,0	5,0	7,4	15,4	21,5

Elevation above sea level (m)	500	1000	1500	2000	2500	3000
Suction loss (m)	0,55	1,1	1,65	2,2	2,75	3,3

Friction loss is shown in the tables at pages of this catalogue. To reduce it to a minimum, especially in cases of high suction head (over 4-5 m.) or within the operating limits with high flow rates, we recommend using a suction line having a larger diameter than that of the pump's suction port.
It is always a good idea to position the pump as close as possible to the liquid to be pumped.

Make the following calculation:

Liquid: water at ~15°C γ = 1 kg/dm^3
Flow rate required: 25 m^3/h
Head for required delivery: 70 m.
Suction lift: 3,5 m.
The selection is an 33SV3G075T pump whose NPSH required value is, at 25 m^3/h, of 2 m.

For water at 15 °C

hp = Pa / γ = 10,33m, hpv = Pv / γ = 0,174m (0,01701 bar)

The Hf flow resistance in the suction line with foot valves is ~ 1,2 m.
By substituting the parameters in formula① with the numeric values above, we have:

10,33 + (-3,5) ≥ (2 + 0,5) + 1,2 + 0,17

from which we have: 6,8 > 3,9

The relation is therefore verified.

VAPOUR PRESSURE
VAPOUR PRESSURE ps AND ρ DENSITY OF WATER TABLE

t °C	T K	ps bar	ρ kg/dm³
0	273,15	0,00611	0,9998
1	274,15	0,00657	0,9999
2	275,15	0,00706	0,9999
3	276,15	0,00758	0,9999
4	277,15	0,00813	1,0000
5	278,15	0,00872	1,0000
6	279,15	0,00935	1,0000
7	280,15	0,01001	0,9999
8	281,15	0,01072	0,9999
9	282,15	0,01147	0,9998
10	283,15	0,01227	0,9997
11	284,15	0,01312	0,9997
12	285,15	0,01401	0,9996
13	286,15	0,01497	0,9994
14	287,15	0,01597	0,9993
15	288,15	0,01704	0,9992
16	289,15	0,01817	0,9990
17	290,15	0,01936	0,9988
18	291,15	0,02062	0,9987
19	292,15	0,02196	0,9985
20	293,15	0,02337	0,9983
21	294,15	0,24850	0,9981
22	295,15	0,02642	0,9978
23	296,15	0,02808	0,9976
24	297,15	0,02982	0,9974
25	298,15	0,03166	0,9971
26	299,15	0,03360	0,9968
27	300,15	0,03564	0,9966
28	301,15	0,03778	0,9963
29	302,15	0,04004	0,9960
30	303,15	0,04241	0,9957
31	304,15	0,04491	0,9954
32	305,15	0,04753	0,9951
33	306,15	0,05029	0,9947
34	307,15	0,05318	0,9944
35	308,15	0,05622	0,9940
36	309,15	0,05940	0,9937
37	310,15	0,06274	0,9933
38	311,15	0,06624	0,9930
39	312,15	0,06991	0,9927
40	313,15	0,07375	0,9923
41	314,15	0,07777	0,9919
42	315,15	0,08198	0,9915
43	316,15	0,09639	0,9911
44	317,15	0,09100	0,9907
45	318,15	0,09582	0,9902
46	319,15	0,10086	0,9898
47	320,15	0,10612	0,9894
48	321,15	0,11162	0,9889
49	322,15	0,11736	0,9884
50	323,15	0,12335	0,9880
51	324,15	0,12961	0,9876
52	325,15	0,13613	0,9871
53	326,15	0,14293	0,9862
54	327,15	0,15002	0,9862

t °C	T K	ps bar	ρ kg/dm³
55	328,15	0,15741	0,9857
56	329,15	0,16511	0,9852
57	330,15	0,17313	0,9846
58	331,15	0,18147	0,9842
59	332,15	0,19016	0,9837
60	333,15	0,1992	0,9832
61	334,15	0,2086	0,9826
62	335,15	0,2184	0,9821
63	336,15	0,2286	0,9816
64	337,15	0,2391	0,9811
65	338,15	0,2501	0,9805
66	339,15	0,2615	0,9799
67	340,15	0,2733	0,9793
68	341,15	0,2856	0,9788
69	342,15	0,2984	0,9782
70	343,15	0,3116	0,9777
71	344,15	0,3253	0,9770
72	345,15	0,3396	0,9765
73	346,15	0,3543	0,9760
74	347,15	0,3696	0,9753
75	348,15	0,3855	0,9748
76	349,15	0,4019	0,9741
77	350,15	0,4189	0,9735
78	351,15	0,4365	0,9729
79	352,15	0,4547	0,9723
80	353,15	0,4736	0,9716
81	354,15	0,4931	0,9710
82	355,15	0,5133	0,9704
83	356,15	0,5342	0,9697
84	357,15	0,5557	0,9691
85	358,15	0,5780	0,9684
86	359,15	0,6011	0,9678
87	360,15	0,6249	0,9671
88	361,15	0,6495	0,9665
89	362,15	0,6749	0,9658
90	363,15	0,7011	0,9652
91	364,15	0,7281	0,9644
92	365,15	0,7561	0,9638
93	366,15	0,7849	0,9630
94	367,15	0,8146	0,9624
95	368,15	0,8453	0,9616
96	369,15	0,8769	0,9610
97	370,15	0,9094	0,9602
98	371,15	0,9430	0,9596
99	372,15	0,9776	0,9586
100	373,15	1,0133	0,9581
102	375,15	1,0878	0,9567
104	377,15	1,1668	0,9552
106	379,15	1,2504	0,9537
108	381,15	1,3390	0,9522
110	383,15	1,4327	0,9507
112	385,15	1,5316	0,9491
114	387,15	1,6362	0,9476
116	389,15	1,7465	0,9460
118	391,15	1,8628	0,9445

t °C	T K	ps bar	ρ kg/dm³
120	393,15	1,9854	0,9429
122	395,15	2,1145	0,9412
124	397,15	2,2504	0,9396
126	399,15	2,3933	0,9379
128	401,15	2,5435	0,9362
130	403,15	2,7013	0,9346
132	405,15	2,867	0,9328
134	407,15	3,041	0,9311
136	409,15	3,223	0,9294
138	411,15	3,414	0,9276
140	413,15	3,614	0,9258
145	418,15	4,155	0,9214
155	428,15	5,433	0,9121
160	433,15	6,181	0,9073
165	438,15	7,008	0,9024
170	433,15	7,920	0,8973
175	448,15	8,924	0,8921
180	453,15	10,027	0,8869
185	458,15	11,233	0,8815
190	463,15	12,551	0,8760
195	468,15	13,987	0,8704
200	473,15	15,550	0,8647
205	478,15	17,243	0,8588
210	483,15	19,077	0,8528
215	488,15	21,060	0,8467
220	493,15	23,198	0,8403
225	498,15	25,501	0,8339
230	503,15	27,976	0,8273
235	508,15	30,632	0,8205
240	513,15	33,478	0,8136
245	518,15	36,523	0,8065
250	523,15	39,776	0,7992
255	528,15	43,246	0,7916
260	533,15	46,943	0,7839
265	538,15	50,877	0,7759
270	543,15	55,058	0,7678
275	548,15	59,496	0,7593
280	553,15	64,202	0,7505
285	558,15	69,186	0,7415
290	563,15	74,461	0,7321
295	568,15	80,037	0,7223
300	573,15	85,927	0,7122
305	578,15	92,144	0,7017
310	583,15	98,70	0,6906
315	588,15	105,61	0,6791
320	593,15	112,89	0,6669
325	598,15	120,56	0,6541
330	603,15	128,63	0,6404
340	613,15	146,05	0,6102
350	623,15	165,35	0,5743
360	633,15	186,75	0,5275
370	643,15	210,54	0,4518
374,15	647,30	221,20	0,3154

G-at_npsh_b_sc

TABLE OF FLOW RESISTANCE IN 100 m OF STRAIGHT CAST IRON PIPELINE (HAZEN-WILLIAMS FORMULA C=100)

FLOW RATE			NOMINAL DIAMETER in mm and inches																
m^3/h	l/min		15	20	25	32	40	50	65	80	100	125	150	175	200	250	300	350	400
			1/2"	3/4"	1"	1 1/4"	1 1/2"	2	2 1/2"	3"	4"	5"	6"	7"	8"	10"	12"	14"	16"
0,6	10	v	0,94	0,53	0,34	0,21	0,13												
		hr	16	3,94	1,33	0,40	0,13												
0,9	15	v	1,42	0,80	0,51	0,31	0,20												
		hr	33,9	8,35	2,82	0,85	0,29												
1,2	20	v	1,89	1,06	0,68	0,41	0,27	0,17											
		hr	57,7	14,21	4,79	1,44	0,49	0,16											
1,5	25	v	2,36	1,33	0,85	0,52	0,33	0,21											
		hr	87,2	21,5	7,24	2,18	0,73	0,25											
1,8	30	v	2,83	1,59	1,02	0,62	0,40	0,25											
		hr	122	30,1	10,1	3,05	1,03	0,35											
2,1	35	v	3,30	1,86	1,19	0,73	0,46	0,30											
		hr	162	40,0	13,5	4,06	1,37	0,46											
2,4	40	v		2,12	1,36	0,83	0,53	0,34	0,20										
		hr		51,2	17,3	5,19	1,75	0,59	0,16										
3	50	v		2,65	1,70	1,04	0,66	0,42	0,25										
		hr		77,4	26,1	7,85	2,65	0,89	0,25										
3,6	60	v		3,18	2,04	1,24	0,80	0,51	0,30										
		hr		108	36,6	11,0	3,71	1,25	0,35										
4,2	70	v		3,72	2,38	1,45	0,93	0,59	0,35										
		hr		144	48,7	14,6	4,93	1,66	0,46										
4,8	80	v		4,25	2,72	1,66	1,06	0,68	0,40										
		hr		185	62,3	18,7	6,32	2,13	0,59										
5,4	90	v			3,06	1,87	1,19	0,76	0,45	0,30									
		hr			77,5	23,3	7,85	2,65	0,74	0,27									
6	100	v			3,40	2,07	1,33	0,85	0,50	0,33									
		hr			94,1	28,3	9,54	3,22	0,90	0,33									
7,5	125	v			4,25	2,59	1,66	1,06	0,63	0,41									
		hr			142	42,8	14,4	4,86	1,36	0,49									
9	150	v				3,11	1,99	1,27	0,75	0,50	0,32								
		hr				59,9	20,2	6,82	1,90	0,69	0,23								
10,5	175	v				3,63	2,32	1,49	0,88	0,58	0,37								
		hr				79,7	26,9	9,07	2,53	0,92	0,31								
12	200	v				4,15	2,65	1,70	1,01	0,66	0,42								
		hr				102	34,4	11,6	3,23	1,18	0,40								
15	250	v				5,18	3,32	2,12	1,26	0,83	0,53	0,34							
		hr				154	52,0	17,5	4,89	1,78	0,60	0,20							
18	300	v					3,98	2,55	1,51	1,00	0,64	0,41							
		hr					72,8	24,6	6,85	2,49	0,84	0,28							
24	400	v					5,31	3,40	2,01	1,33	0,85	0,54	0,38						
		hr					124	41,8	11,66	4,24	1,43	0,48	0,20						
30	500	v					6,63	4,25	2,51	1,66	1,06	0,68	0,47						
		hr					187	63,2	17,6	6,41	2,16	0,73	0,30						
36	600	v						5,10	3,02	1,99	1,27	0,82	0,57	0,42					
		hr						88,6	24,7	8,98	3,03	1,02	0,42	0,20					
42	700	v						5,94	3,52	2,32	1,49	0,95	0,66	0,49					
		hr						118	32,8	11,9	4,03	1,36	0,56	0,26					
48	800	v						6,79	4,02	2,65	1,70	1,09	0,75	0,55					
		hr						151	42,0	15,3	5,16	1,74	0,72	0,34					
54	900	v						7,64	4,52	2,99	1,91	1,22	0,85	0,62					
		hr						188	52,3	19,0	6,41	2,16	0,89	0,42					
60	1000	v							5,03	3,32	2,12	1,36	0,94	0,69	0,53				
		hr							63,5	23,1	7,79	2,63	1,08	0,51	0,27				
75	1250	v							6,28	4,15	2,65	1,70	1,18	0,87	0,66				
		hr							96,0	34,9	11,8	3,97	1,63	0,77	0,40				
90	1500	v							7,54	4,98	3,18	2,04	1,42	1,04	0,80				
		hr							134	48,9	16,5	5,57	2,29	1,08	0,56				
105	1750	v							8,79	5,81	3,72	2,38	1,65	1,21	0,93				
		hr							179	65,1	21,9	7,40	3,05	1,44	0,75				
120	2000	v								6,63	4,25	2,72	1,89	1,39	1,06	0,68			
		hr								83,3	28,1	9,48	3,90	1,84	0,96	0,32			
150	2500	v								8,29	5,31	3,40	2,36	1,73	1,33	0,85			
		hr								126	42,5	14,3	5,89	2,78	1,45	0,49			
180	3000	v									6,37	4,08	2,83	2,08	1,59	1,02	0,71		
		hr									59,5	20,1	8,26	3,90	2,03	0,69	0,28		
210	3500	v									7,43	4,76	3,30	2,43	1,86	1,19	0,83		
		hr									79,1	26,7	11,0	5,18	2,71	0,91	0,38		
240	4000	v									8,49	5,44	3,77	2,77	2,12	1,36	0,94		
		hr									101	34,2	14,1	6,64	3,46	1,17	0,48		
300	5000	v										6,79	4,72	3,47	2,65	1,70	1,18		
		hr										51,6	21,2	10,0	5,23	1,77	0,73		
360	6000	v										8,15	5,66	4,16	3,18	2,04	1,42		
		hr										72,3	29,8	14,1	7,33	2,47	1,02		
420	7000	v											6,61	4,85	3,72	2,38	1,65	1,21	
		hr											39,6	18,7	9,75	3,29	1,35	0,64	
480	8000	v											7,55	5,55	4,25	2,72	1,89	1,39	
		hr											50,7	23,9	12,49	4,21	1,73	0,82	
540	9000	v											8,49	6,24	4,78	3,06	2,12	1,56	1,19
		hr											63,0	29,8	15,5	5,24	2,16	1,02	0,53
600	10000	v												6,93	5,31	3,40	2,36	1,73	1,33
		hr												36,2	18,9	6,36	2,62	1,24	0,65

The hr values must be multiplied by:

0,71 for galvanized or painted steel pipes

0,54 for stainless steel or copper pipes

0,47 for PVC or PE pipes

hr = flow resistance for 100 m of straight pipeline (m)

V = water speed (m/s)

G-at-pct-en_b_th

FLOW RESISTANCE
TABLE OF FLOW RESISTANCE IN BENDS, VALVES AND GATES

The flow resistance is calculated using the equivalent pipeline length method according to the table below:

ACCESSORY TYPE	DN											
	25	32	40	50	65	80	100	125	150	200	250	300
	Equivalent pipeline length (m)											
45° bend	0,2	0,2	0,4	0,4	0,6	0,6	0,9	1,1	1,5	1,9	2,4	2,8
90° bend	0,4	0,6	0,9	1,1	1,3	1,5	2,1	2,6	3,0	3,9	4,7	5,8
90° smooth bend	0,4	0,4	0,4	0,6	0,9	1,1	1,3	1,7	1,9	2,8	3,4	3,9
Union tee or cross	1,1	1,3	1,7	2,1	2,6	3,2	4,3	5,3	6,4	7,5	10,7	12,8
Gate valve	-	-	-	0,2	0,2	0,2	0,4	0,4	0,6	0,9	1,1	1,3
Foot check valve	1,1	1,5	1,9	2,4	3,0	3,4	4,7	5,9	7,4	9,6	11,8	13,9
Non return valve	1,1	1,5	1,9	2,4	3,0	3,4	4,7	5,9	7,4	9,6	11,8	13,9

G-a-pcv-en_b_th

The table is valid for the Hazen Williams coefficient C=100 (cast iron pipework);
for steel pipework, multiply the values by 1,41;
for stainless steel, copper and coated cast iron pipework, multiply the values by 1,85;
When the **equivalent pipeline length** has been determined, the flow resistance is obtained from the table of flow resistance.
The values given are guideline values which are bound to vary slightly according to the model, especially for gate valves and non-return valves, for which it is a good idea to check the values supplied by manufacturers.

VOLUMETRIC CAPACITY

Litres per minute l/min	Cubic metres per hour m^3/h	Cubic feet per hour ft^3/h	Cubic feet per minute ft^3/min	Imperial gallon per minute Imp. gal/min	U.S. gallon per minute US gal/min
1,0000	0,0600	2,1189	0,0353	0,2200	0,2642
16,6667	**1,0000**	35,3147	0,5886	3,6662	4,4029
0,4719	0,0283	**1,0000**	0,0167	0,1038	0,1247
28,3168	1,6990	60,0000	**1,0000**	6,2288	7,4805
4,5461	0,2728	9,6326	0,1605	**1,0000**	1,2009
3,7854	0,2271	8,0208	0,1337	0,8327	**1,0000**

PRESSURE AND HEAD

Newton per square metre N/m^2	kilo Pascal kPa	bar bar	Pound force per square inch psi	Metre of water m H_2O	Millimetre of mercury mm Hg
1,0000	0,0010	1×10^{-5}	$1{,}45 \times 10^{-4}$	$1{,}02 \times 10^{-4}$	0,0075
1 000,0000	**1,0000**	0,0100	0,1450	0,1020	7,5006
1×10^5	100,0000	**1,0000**	14,5038	10,1972	750,0638
6 894,7570	6,8948	0,0689	**1,0000**	0,7031	51,7151
9 806,6500	9,8067	0,0981	1,4223	**1,0000**	73,5561
133,3220	0,1333	0,0013	0,0193	0,0136	**1,0000**

LENGTH

Millimetre mm	Centimetre cm	Metre m	Inch in	Foot ft	Yard yd
1,0000	0,1000	0,0010	0,0394	0,0033	0,0011
10,0000	**1,0000**	0,0100	0,3937	0,0328	0,0109
1 000,0000	100,0000	**1,0000**	39,3701	3,2808	1,0936
25,4000	2,5400	0,0254	**1,0000**	0,0833	0,0278
304,8000	30,4800	0,3048	12,0000	**1,0000**	0,3333
914,4000	91,4400	0,9144	36,0000	3,0000	**1,0000**

VOLUME

Cubic metre m^3	Litre L	Millilitre ml	Imperial gallon imp. gal.	U.S. gallon US gal.	Cubic foot ft^3
1,0000	1 000,0000	1×10^6	219,9694	264,1720	35,3147
0,0010	**1,0000**	1 000,0000	0,2200	0,2642	0,0353
1×10^{-6}	0,0010	**1,0000**	$2{,}2 \times 10^{-4}$	$2{,}642 \times 10^{-4}$	$3{,}53 \times 10^{-5}$
0,0045	4,5461	4 546,0870	**1,0000**	1,2009	0,1605
0,0038	3,7854	3 785,4120	0,8327	**1,0000**	0,1337
0,0283	28,3168	28 316,8466	6,2288	7,4805	**1,0000**

TEMPERATURE

Water	Kelvin K	Celsius °C	Fahrenheit °F	$°F = °C \times \frac{9}{5} + 32$ $°C = (°F - 32) \times \frac{5}{9}$
icing	273,1500	0,0000	32,0000	
boiling	373,1500	100,0000	212,0000	

G-at_pp-en_b_sc

FURTHER PRODUCT SELECTION AND DOCUMENTATION
Xylem Solver

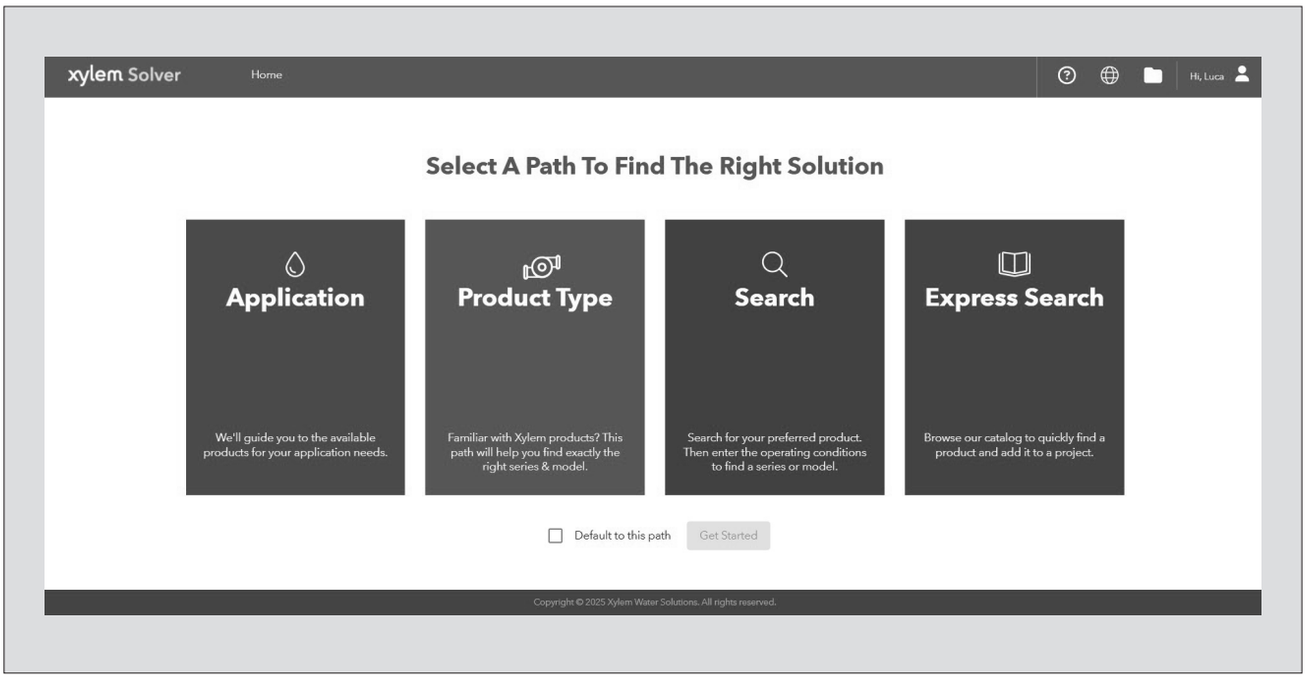

Xylem Solver is pump solution selection software with an extensive online database of product information across the entire Xylem range of pumps and related products, with multiple search options and helpful project management facilities. The system holds up-to-date product information on thousands of products and accessories.

The possibility to search by applications and the detailed information output given makes it easy to make the optimal selection without having detailed knowledge about the Xylem products.

The search can be made by:

- Application
- Product type
- Duty point

Xylem Solver gives a detailed output:

- List with search results in which you can compare up to four products
- Performance curves (flow, head, power, efficiency, NPSH)
- Motor data
- Dimensional drawings
- Options
- Data sheet printouts
- Document downloads incl dxf, stp and BIM files

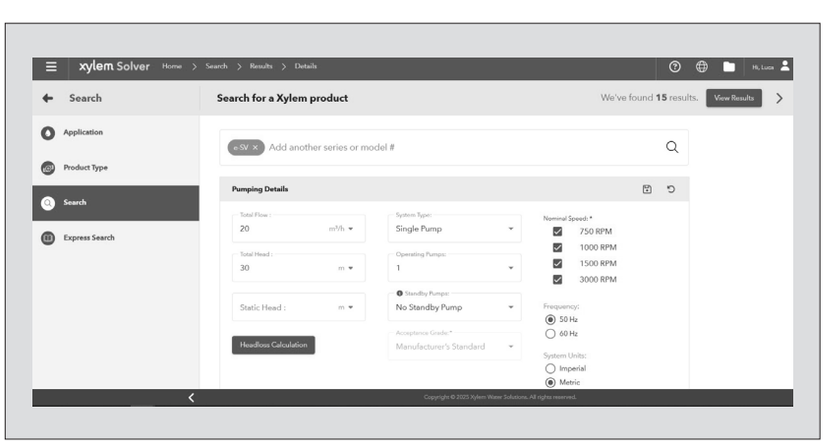

Once a product series has been selected, input design criteria to select pumps that meet the design requirements.

FURTHER PRODUCT SELECTION AND DOCUMENTATION
Xylem Solver

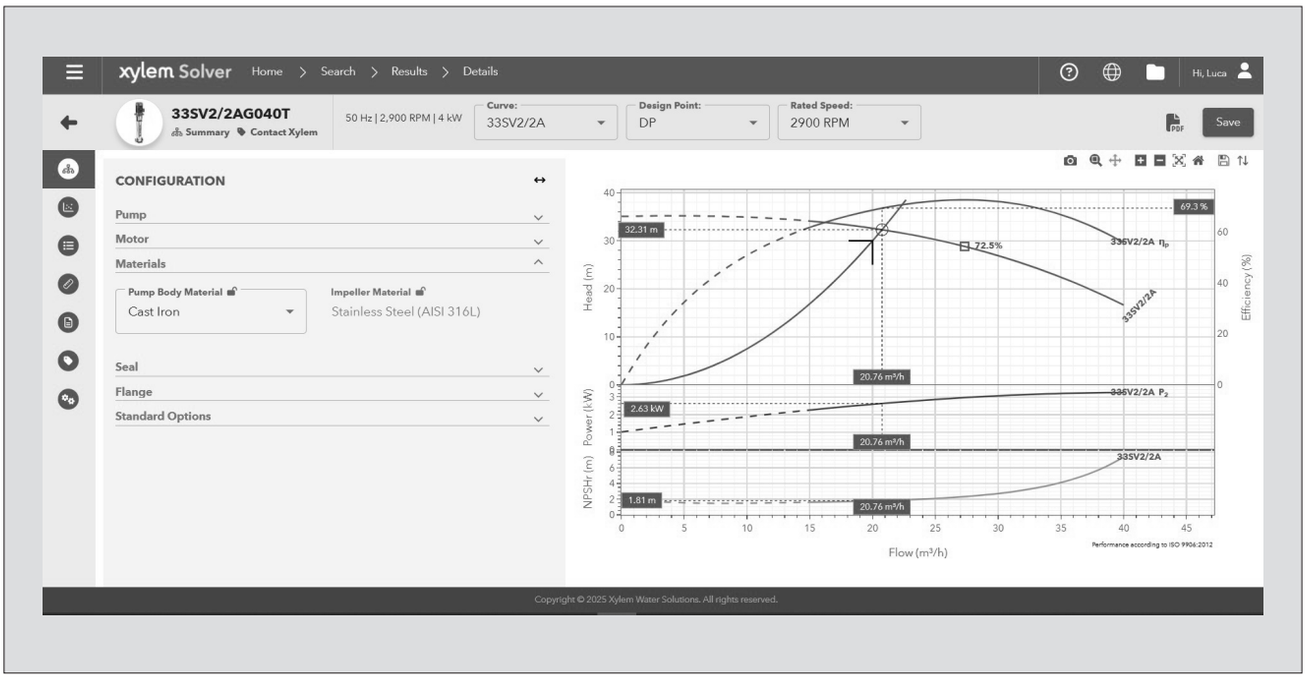

The detailed output makes it easy to select the optimal pump from the given alternatives.

The best way to work with Xylem Solver is to create a personal account. This makes it possible to:

- Set own standard units
- Create and save projects

Every registered user has a proper space, where all projects are saved.

For more information about Xylem Solver please contact our sales network or visit **https://solver.xylem.com.**

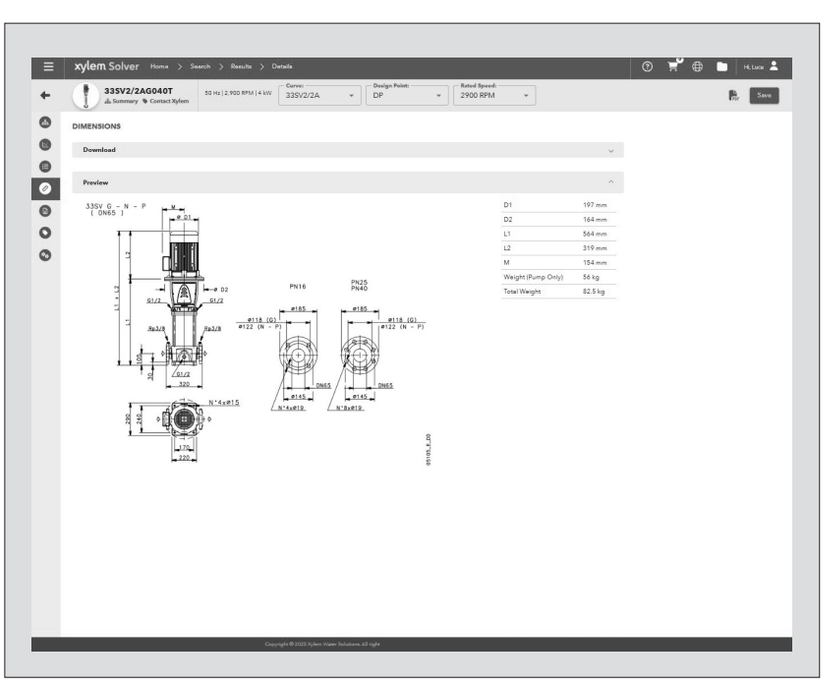

The dimensions tab shows technical drawings, dimensions, and CAD files when available.

Xylem |'zīləm|

1) the tissue in plants that brings water and nutrients upward from the roots.

2) a leading global water solutions company.

Xylem is the connective tissue and system in plants which cleanses and transports water from the root to where it is needed most to sustain life.

And this is the essence of Xylem as a company. We are committed to driving sustainable impact by ensuring our connected technologies and solutions support our customers and the communities they serve, to tackle the water challenges that matter most to them.

For more information on how Xylem can help you, visit xylem.com.

Xylem Service Italia Srl
Via Dottor Vittorio Lombardi 14
36075 - Montecchio Maggiore (VI)
Italy

Tel. (+39) 0444 707111
Fax (+39) 0444 491043
www.xylem.com/it-it

Xylem Service Italia Srl reserves the right to make modification without prior notice.

© 2025 Xylem Inc. or its affiliates. All rights reserved. Lowara is a trademark of Xylem or one of its subsidiaries.