OPERATING MANUAL

ba75503e08 12/2014

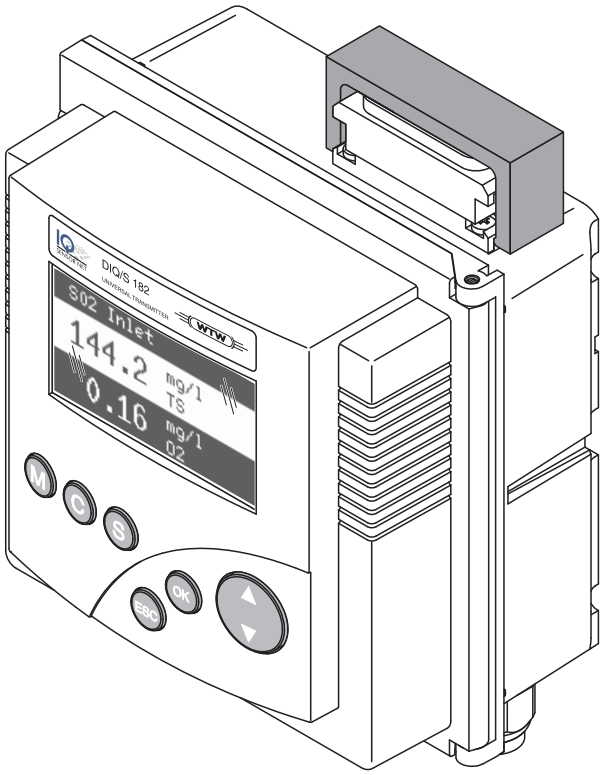

DIQ/S 182-PR
System 182

CONTROLLER (DIQ/S 182)

WTW

a xylem brand

Copyright © Weilheim 2014, WTW GmbH
Reprinting - even as excerpts - is only allowed with the explicit written authorization of WTW GmbH, Weilheim..
Printed in Germany.

System 182 - Contents

1 Overview 1-1
1.1 Structure and function 1-1
1.2 Behavior of the system in the case of power failure 1-3

2 Safety 2-1
2.1 Safety information 2-1
2.1.1 Safety information in the operating manual 2-1
2.1.2 Safety signs on the product 2-1
2.1.3 Further documents providing safety information 2-1
2.2 Safe operation 2-2
2.2.1 Authorized use 2-2
2.2.2 Requirements for safe operation 2-2
2.2.3 Unauthorized use 2-2
2.3 User qualification 2-2

3 Installation 3-1
3.1 Scope of delivery 3-1
3.2 Basics of the installation 3-1
3.2.1 Requirements of the measurement location 3-1
3.2.2 Additional MIQ power supply modules 3-1
3.3 Safety requirements on the electrical installation 3-3
3.4 Installation guidelines for lightning protection 3-3
3.5 Connecting system components 3-6
3.5.1 Connecting MIQ modules: General information 3-6
3.5.2 Variant 1: Stack expansion forwards 3-8
3.5.3 Variant 2: stack expansion backwards 3-11
3.5.4 Distributed mounting 3-14
3.5.5 Connecting IQ sensors 3-18
3.6 On site mounting of the Universal Transmitter and MIQ Modules 3-20
3.6.1 General information 3-20
3.6.2 Mounting on a mounting stand with the SSH/IQ sun shield 3-21
3.6.3 Panel mounting 3-24
3.6.4 Top hat rail mounting 3-26
3.7 Using DIQ modules (accessories) 3-27
3.7.1 DIQ/JB 3-27
3.7.2 DIQ/CHV 3-27
3.7.3 Installation of the modules 3-28
3.8 Electrical connections: General instructions 3-29
3.9 Connecting the voltage supply 3-31
3.9.1 DIQ/S 182-PR (Line power version) 3-31
3.9.2 DIQ/S 182-PR/24V (24 V version) 3-35

3.10 Connections to the relay outputs 3-38
3.10.1 General installation instructions 3-38
3.10.2 Usage of the auxiliary voltage 3-40
3.11 Commissioning 3-42
3.12 Installation examples 3-43
3.12.1 Connecting two sensors without compressed air cleaning 3-43
3.12.2 Connecting two sensors with compressed air cleaning 3-44
3.13 Figures of the terminal strips 3-46

4 Operation 4-1
4.1 Operating elements 4-1
4.2 Measured value and status display 4-2
4.3 Working with the *SETTINGS* menu 4-4
4.3.1 Selection menus 4-4
4.3.2 Setting tables 4-5
4.3.3 Entry mode 4-6
4.4 *PROPERTIES* menu 4-8
4.4.1 Overview 4-8
4.4.2 Maintenance condition 4-9
4.4.3 *Sensor status* Sxx 4-11
4.5 Calibration of sensors 4-15
4.6 Passwords 4-17

5 The *SETTINGS* menu 5-1
5.1 Overview of the *SETTINGS* menu 5-1
5.2 *Language* 5-1
5.3 Sensor S01/S02 5-2
5.4 Relay output R1/R2/R3 5-3
5.5 PROFIBUS config. 5-4
5.6 System 5-4

6 Relay outputs 6-1
6.1 General information 6-1
6.2 Linking and adjusting: general proceedings 6-2
6.2.1 Linking relay outputs 6-2
6.2.2 Deleting a link with an output 6-3
6.2.3 Setting outputs 6-4
6.3 Basic information on relay functions 6-5
6.3.1 Event monitoring 6-5
6.3.2 Limit indicator 6-5
6.3.3 Proportional output 6-7
6.4 Setting table for relays 6-14
6.4.1 Functions and settings 6-14
6.4.2 *System monitoring* 6-15
6.4.3 *Sensor monitoring* 6-16

6.4.4 *Limit indicator* 6-17
6.4.5 *Frequency output* 6-18
6.4.6 *Pulse-width output* 6-19
6.4.7 Sensor-controlled cleaning 6-20
6.4.8 *Cleaning* 6-21
6.4.9 *Manual control* 6-24
6.5 Behavior of linked relay outputs 6-25
6.5.1 Behavior in case of error 6-25
6.5.2 Behavior in non-operative condition 6-25

7 Maintenance and cleaning 7-1
7.1 Maintenance 7-1
7.2 Cleaning 7-1

8 What to do if 8-1
8.1 Information on errors 8-1
8.2 Error causes and remedies 8-1
8.3 Replacing system components 8-2
8.3.1 Replacing passive components 8-2
8.3.2 Adding and replacing IQ sensors 8-3

9 Technical data 9-1
9.1 DIQ/S 182-PR 9-1
9.2 MIQ modules 9-5
9.3 DIQ/JB 9-7
9.4 DIQ/CHV 9-8
9.5 Space required by mounted components 9-10

10 Accessories and options 10-1

11 Index 11-1

12 Appendix (store separately if required) 12-1
12.1 Forgotten the password? 12-1
12.2 Default passwords 12-1

1 Overview

1.1 Structure and function

The System 182 is a modular, multiparameter measuring system. The control and operation unit of the system is the DIQ/S 182-PR Universal Transmitter with integrated power pack. Is has three relay outputs and a PROFIBUS-DP output for the connection to existing process control systems.

Sensors

One or two digital WTW single sensors (one sensor for one main measured parameter) or a double sensor (one sensor for two main measured parameters) can be connected to the DIQ/S 182-PR Universal Transmitter. I. e. up to two main measured parameters (e.g. pH, D. O. content, turbidity value...) and additionally up to two secondary measured parameters (e.g. temperature) can be displayed and administrated. Each sensor is automatically recognized after being connected and immediately starts measuring.

The sensors can be directly connected to the DIQ/S 182-PR Universal Transmitter.

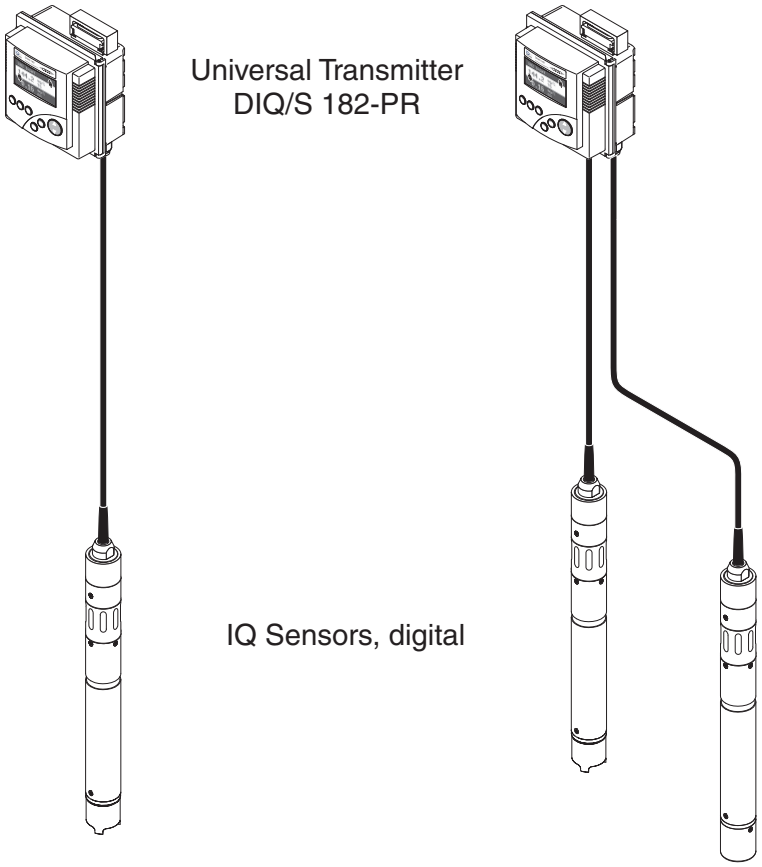

Fig. 1-1 Simple systems with one and two sensors

Relay outputs

The relay outputs can be linked to sensors. Linked outputs can be used to monitor sensors and for the output of measured values.

A relay output is programmable as:

- Alarm contact (event monitoring)
- Limit monitor
- Proportional output of measured values (pulse width or frequency output)
- Control unit of a compressed air-driven sensor cleaning system.

For quick orientation, the states of all relay outputs are clearly indicated on the display.

PROFIBUS DP output

The PROFIBUS output enables a connection to a PROFIBUS master (PROFIBUS-DP) and thus a connection to a superordinate process control (see operating manual "IQ SENSOR NET Field bus linking").

Compressed air-driven cleaning system

The DIQ/S 182-PR Universal Transmitter is prepared for the compressed air-driven, time-controlled sensor cleaning function. For this, a DIQ/CHV valve module and if necessary a CH cleaning head is required per sensor (both available as accessories). The cleaning procedure is controlled by the Universal Transmitter. The Universal Transmitter provides the supply voltage and control relay for the compressed air valve in the DIQ/CHV valve module. This enables a simple setup and uncomplicated wiring.

Alternatively, the MIQ/CHV PLUS valve module can be installed in the system. It combines the relay, valve and valve power supply in one MIQ enclosure. Thus, no additional wiring is required, which makes installation easier especially if the distance between the Universal Transmitter and sensor is great.

Further system options

If necessary, an additional power pack can be added to supply sensors with high power consumption (e.g. UV/VIS sensor).

1.2 Behavior of the system in the case of power failure

- The system configuration remains stored permanently. It consists of the following settings:
  - Sensor settings
  - Settings and links of relay outputs
  - PROFIBUS settings
  - System settings (display language, air pressure/location altitude, passwords, etc.)
- Linked relay outputs switch to the non-active condition (open).
- When the power is restored the system is automatically restarted. The system continues to work with the settings at the time of the power failure (except for the time).

2 Safety

2.1 Safety information

2.1.1 Safety information in the operating manual

This operating manual provides important information on the safe operation of the product. Read this operating manual thoroughly and make yourself familiar with the product before putting it into operation or working with it. The operating manual must be kept in the vicinity of the meter so you can always find the information you need.

Important safety instructions are highlighted in this operating manual. They are indicated by the warning symbol (triangle) in the left column. The signal word (e.g. "CAUTION") indicates the danger level:



WARNING
indicates a possibly dangerous situation that can lead to serious (irreversible) injury or death if the safety instruction is not followed.



CAUTION
indicates a possibly dangerous situation that can lead to slight (reversible) injury if the safety instruction is not followed.

NOTE
indicates a possibly dangerous situation where goods might be damaged if the actions mentioned are not taken.

2.1.2 Safety signs on the product

Note all labels, information signs and safety symbols on the product. A warning symbol (triangle) without text refers to safety information in this operating manual.

2.1.3 Further documents providing safety information

The following documents provide additional information, which you should observe for your safety when working with the measuring system:

- Operating manuals of other components of the DIQ/S 182-PR system (power packs, controller, accessories)
- Safety datasheets of calibration and maintenance equipment (e.g. cleaning solutions).

2.2 Safe operation

2.2.1 Authorized use

The authorized use of the System 182 consists of its use in online analysis. Only the operation and running of the product according to the instructions and technical specifications given in this operating manual is authorized (see chapter 9 TECHNICAL DATA). Any other use is considered unauthorized.

2.2.2 Requirements for safe operation

Note the following points for safe operation:

- The product may only be operated according to the authorized use specified above.
- The product may only be supplied with power by the energy sources mentioned in this operating manual.
- The product may only be operated under the environmental conditions mentioned in this operating manual.
- The product may not be opened.

2.2.3 Unauthorized use

The product must not be put into operation if:

- it is visibly damaged (e.g. after being transported)
- it was stored under adverse conditions for a lengthy period of time (storing conditions, see chapter 9 TECHNICAL DATA).

2.3 User qualification

Target group

The DIQ/S 182-PR system was developed for online analysis. Some maintenance activities, e.g. changing the membrane caps in D.O. sensors, require the safe handling of chemicals. Thus, we assume that the maintenance personnel is familiar with the necessary precautions to take when dealing with chemicals as a result of their professional training and experience.

Special user qualifications

The following installation activities may only be performed by a qualified electrician:

- Connection of the MIQ/PS power supply module to the power line (see MIQ/PS module manual).
- Connection of external, line voltage-carrying circuits to relay contacts (see module manual of the relay output module).



WARNING

A circuit (except for the power supply connections), that is connected to an DIQ/S 182-PR component, must not feed any voltages or currents that are not allowed. It has to be made sure that the circuit at any time meets all requirements of a *Limited circuit* or *Limited Power* as well as of *SELV* (Safety Extra Low Voltage). These include the following limiting value specifications:

- **AC voltage: max. 30 V effective / 42.4 V peak**
- **DC voltage: max. 60 V**
- **Current limit: max. 8 A**
- **Power output limitation: max. 150 VA**

3 Installation

How to connect the DIQ/S 182-PR to the PROFIBUS master is described in detail in the chapter 7 PROFIBUS CONNECTION.

3.1 Scope of delivery

The following parts are included in the scope of delivery of the DIQ/S 182-PR:

- DIQ/S 182-PR Universal Transmitter
- Accessory kit with:
  - Contact carrier with screws
  - ISO cap nuts with screws and ring washers
  - Cable glands with sealing gaskets
- Operating manual.

3.2 Basics of the installation

3.2.1 Requirements of the measurement location

The measurement location must meet the environmental conditions specified in section 9.1 DIQ/S 182-PR.

3.2.2 Additional MIQ power supply modules

The power pack of the Universal Transmitter supplies enough power for most combinations of sensors. Some sensors with high power consumption may require the installation of an MIQ power supply module in addition to the Universal Transmitter. For installation, refer to the operating manual of the power supply module. The table on the following page shows which sensor/sensor combinations require an additional power supply module.

The terminator switch on the terminal strip of all additional MIQ modules in the system 182 must be set to "Off".

2nd sensor / 1st sensor	TriOxmatic® 700 IQ (SW)	TriOxmatic® 701 IQ	TriOxmatic® 702 IQ	FDO 70x IQ (SW)	TetraCon® 700 IQ (SW)	AmmoLyt® 700 IQ	NitraLyt 700 IQ	SensoLyt® 700 IQ (SW)	ViSolid® 700 IQ	VisoTurb® 700 IQ	NitraVis® 70x IQ *	CarboVis® 70x IQ *	VARiON*Plus* 700 IQ (NH4-N or NO3-N)	MIQ/IC2 (1 channel operation)
TriOxmatic® 700 IQ (SW)	-	-	-		-	-	-	-	-	-	**1**	**1**	-	-
TriOxmatic® 701 IQ	-	-	-		-	-	-	-	-	-	**1**	**1**	-	-
TriOxmatic® 702 IQ	-	-	-		-	-	-	-	-	-	**1**	**1**	-	-
FDO 70x IQ (SW)	-	-	-		-	-	-	-	-	-	**1**	**1**	-	-
TetraCon® 700 IQ (SW)	-	-	-		-	-	-	-	-	-	**1**	**1**	-	-
AmmoLyt® 700 IQ	-	-	-		-	-	-	-	-	-	**1**	**1**	-	-
NitraLyt® 700 IQ	-	-	-		-	-	-	-	-	-	**1**	**1**	-	-
VARiON*Plus* 700 IQ (with NH4-N or NO3-N)	-	-	-		-	-	-	-	-	-	**1**	**1**	-	-
SensoLyt® 700 IQ (SW)	-	-	-		-	-	-	-	-	-	**1**	**1**	-	-
ViSolid® 700 IQ	-	-	-		-	-	-	-	-	-	**1**	**1**	-	-
VisoTurb® 700 IQ	-	-	-		-	-	-	-	-	-	**1**	**1**	-	-
NitraVis® 700/x IQ *	**1**	**1**	**1**	**1**	**1**	**1**	**1**	**1**	**1**	**1**	**1**	**1**	**1**	**1**
CarboVis® 700/x IQ *	**1**	**1**	**1**	**1**	**1**	**1**	**1**	**1**	**1**	**1**	**1**	**1**	**1**	**1**
MIQ/IC2 (1 channel operation)	-	-	-		-	-	-	-	-	-	**1**	**1**	-	-
VARiON*Plus* 700 IQ (with NH4-N and NO3-N)	**-** (double sensor: no combination with any other sensor possible!)													
MIQ/IC2 (2 channel operation)	**-** (double sensor: no combination with any other sensor possible!)													
NitraVis® 70x IQ TS *	**1** (double sensor: no combination with any other sensor possible!)													
CarboVis® 70x IQ TS *	**1** (double sensor: no combination with any other sensor possible!)													
NiCaVis® 70x IQ *	**1** (double sensor: no combination with any other sensor possible!)													

1 = One additional power supply module required.

* Install a further MIQ power supply module in the vicinity of the sensor.

3.3 Safety requirements on the electrical installation

Electrical equipment (e.g. motors, contactors, cables, lines, relays) must meet the following requirements:

- Conformity with national regulations (e.g. NEC, VDE and IEC)
- Suitability for the electrical conditions at the installation site
  - Maximum operating voltage
  - Maximum operating current
- Suitability for the environmental conditions at the installation site
  - Temperature resistance (minimum and maximum temperature)
  - Stability against UV light when used outdoors
  - Protection against water and dust (Nema or IP protection class).
- Suitable fusing of the electrical circuit
  - Overcurrent fuses (in accordance with the technical data of the device input or output)
  - Overvoltage class II surge limiters
- Suitable disconnecting device (e. g. switch or circuit breaker) for the mains supply of permanently mounted equipment with separate mains connection
  - in compliance with the following regulations
    - IEC 60947-1
    - IEC 60947-3
  - in the vicinity of the equipment (recommendation)
- Flame-resistant (cables and lines),
  in compliance with the following regulations
  - UL 2556 VW-1 (for USA, Canada)
  - IEC 60332-1-2 (outside of USA, Canada)

3.4 Installation guidelines for lightning protection

When using the IQ SENSOR NET instrumentation, particularly in outdoor areas, adequate protection against (electrical) surges must be provided. A surge is a summation phenomenon of surge voltage and surge current. It is generated through the indirect effect of a lightning event or switching operation in the mains, in the grounding system and in information technology lines.

To be adequately protected against the damaging effects of surges, an integrated concept of the following protective measures is required:

- internal device-related protective measures and

- external protective measures of the installation environment.

The internal device-related protective measures are already integrated in the WTW online measuring technology as so-called 'lightning protection' (see chapter 9 TECHNICAL DATA).

The external protective measures of the installation environment can be carried out with respect to the following guidelines:

1 All lines of the IQ SENSOR NET system must be
a) installed inside (or else close to) the grounded metallic mounting constructions, e.g. handrails, pipes and posts if possible
b) or, particularly in the case of longer lines, laid in the ground.

Background: The formation of highly lightning hazardous inductive loops between the cables and ground is avoided through the low clearance of the grounded metal construction or by installation in the ground.

2 Only the SNCIQ or SNCIQ-UG cable material must be used. This cable material, particularly the high line cross section of the cable shielding (1.5 mm²), is an important prerequisite for the hazard-free discharging of the surge without inadmissibly high overvoltages developing along the line at the same time that could have a damaging effect on the individual IQ SENSOR NET components. It is not recommended to use cables from other manufacturers with usually appreciably lower shielding conductor cross sections.

3 All metallic mounting constructions, handrails, pipes, posts etc. on which MIQ modules are installed must be connected to the local potential equalization system and the grounding system or must be individually sufficiently grounded locally according to the codes of practice.
For the individual grounding of the measuring point the mounting construction must be solidly connected by means of a large-area auxiliary electrode with the measuring medium.
Metallic control shafts/pipes and other large-area metallic bodies that reach into the measuring medium are, for example, ideal for use in the grounding of the mounting construction.
This creates a set path for the main surge. As a result it is possible to avoid the surge being discharged via the IQ SENSOR NET cable and via the valuable sensors in the measuring medium.

4 The contacts of the MIQ modules must always be protected by the associated contact covers if they are not in use. The contact cover provides improved insulation against the electric fields of a thunderstorm event through the extension of the air and creepage paths.

5 It is recommended to attach a metallic or nonmetallic sun shield to each outside location of the MIQ modules. Sun shields protect the electric field lines in the area of the MIQ module through an advantageous development of the electrical field lines in the area of

the MIQ module and promote the dissipation of the surge via the mounting construction.

6 The mains voltage for supplying the measuring system must comply with overvoltage category II. Generally this is ensured through the public operator of the power supply networks. In company-owned networks, e.g. in all power supply systems owned by wastewater treatment plants, this must be kept separate by a potential equalization and a surge protection system for the plant.

7 One part of the IQ SENSOR NET safety and lightning protection concept is based on high-grade protective insulation of the network components and of the entire system. It does not have or require any protective ground (PG) conductor or earth terminal. Avoid any direct connection of the IQ SENSOR NET connections or the metallic sensor enclosures with the local grounding or potential equalization system and with metallic construction elements (see point 9).

8 Additional external lightning protection measures directly on the IQ SENSOR NET system or its components, e.g. the use of overvoltage surge arresters, are not necessary for protection against the indirect effects of lightning and could possibly result in malfunctions.

9 For the realization of the internal lightning protection of the system (e.g. wastewater treatment plant control stands) and for the protection of IQ SENSOR NET external resources, cable entry points into buildings or distributions coming from the IQ SENSOR NET must be carried out as follows:

- The shield of SNCIQ or SNCIQ-UG cables can be connected to the local potential equalization with a gas overvoltage surge arrester. Shielding terminals (e. g. of the PROFIBUS system) have to be used to contact the shield. The shield of the cable must not be opened under any circumstances.
- 0/4-20 mA interfaces must be realized with shielded cables. The cable shield must be connected directly to the potential equalization(s) provided. If plant potential equalization systems are provided on both sides, the shield must also be connected on both sides. The inner conductors must have no contact with the potential equalization.
- The PROFIBUS cables have to be installed according to the rules of the relevant bus system.
- Relay lines should be connected to the local potential equalization in order to provide general and consistent protection via gas overvoltage surge arresters.

3.5 Connecting system components

3.5.1 Connecting MIQ modules: General information

You can connect the Universal Transmitter to MIQ modules without connection cable (stack mounting).

Mounting direction

Variant 1 - stack expansion forwards. The back of the Universal Transmitter or an MIQ module is attached to the lid of an MIQ module (page 3-8). Select this variant if an MIQ module is already permanently installed, e.g. to a wall.	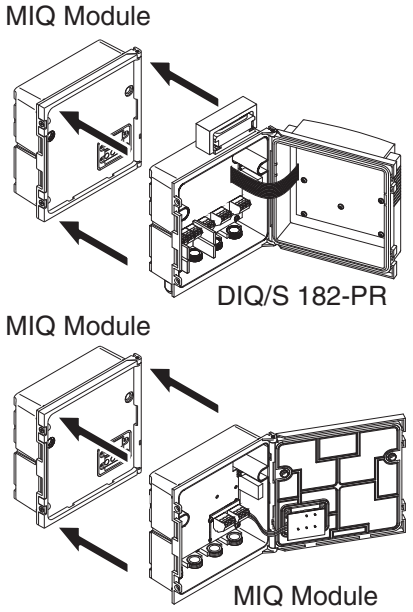
Variant 2: - stack expansion backwards. The lid of an MIQ module is attached to the back of the Universal Transmitter or another MIQ module (page 3-11). Select this variant if the Universal Transmitter or other MIQ module is already permanently installed, e.g. in a panel.	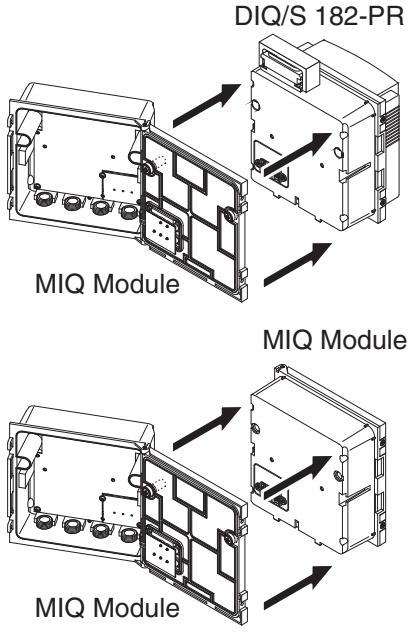

NOTE

For optimum stability, a maximum of two MIQ modules may be connected to the Universal Transmitter. One MIQ power supply module

only may be mounted per stack in addition to the Universal Transmitter.



In the case of panel mounting, the front module must be installed individually in the switch cabinet aperture first. Only then can any MIQ modules be added (variant 2).



The terminator switch on the terminal strip of all MIQ modules in the System 182 must be set to "Off".

Materials required

- 2 x ISO blind nuts (M4)
- 2 x cheese-head screws (M4x16) with plastic washer
- 1 x contact base with two plastic tapping screws (scope of delivery of the MIQ module).

Tools

- Phillips screwdriver.

Below, both installation variants of attaching an MIQ module to the Universal Transmitter are described. The assembly of further MIQ modules is carried out analogously. To dismantle a stack, proceed in the reverse order to mounting.

3.5.2 Variant 1: Stack expansion forwards

Preparing the stack mounting

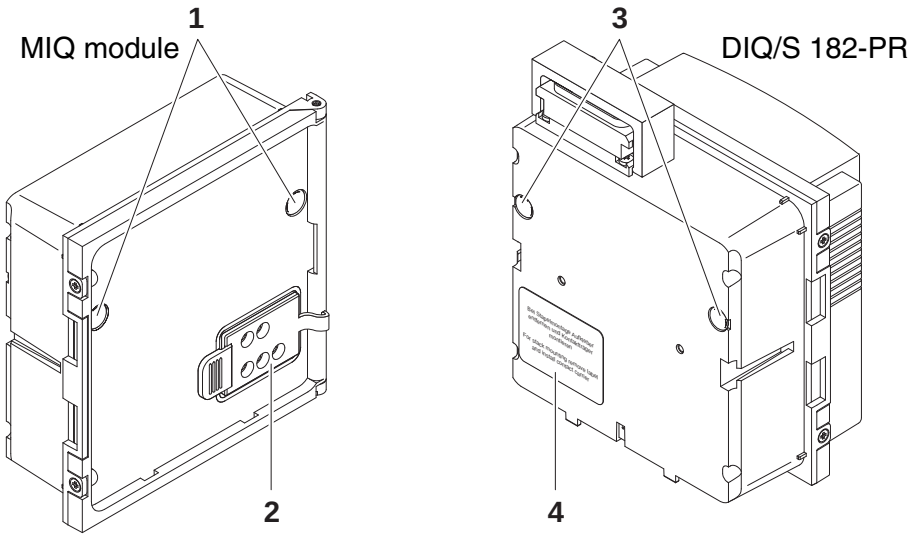

Fig. 3-1 Preparing MIQ modules for stack mounting (variant 1)

1	Remove the covers from the drilled mounting holes (pos. 1 and 3 in Fig. 3-1).
2	Remove the contact cover (pos. 2).
3	Pull off the adhesive label (pos. 4).

Mounting the contact base

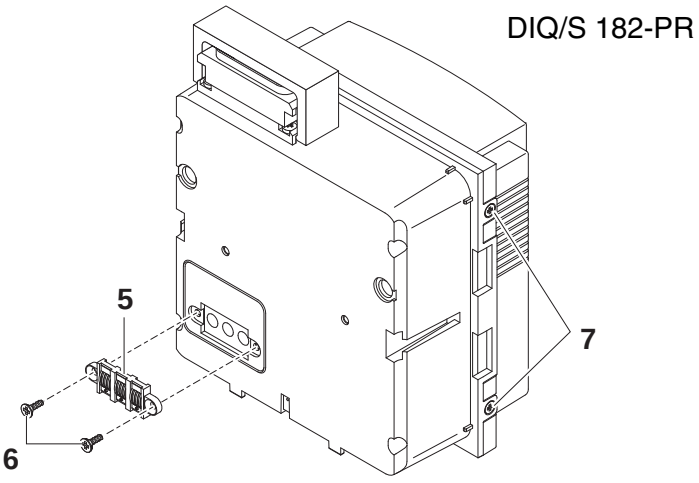

Fig. 3-2 Mounting the contact base (variant 1)

Only use the plastic tapping screws supplied for attaching the contact base. They ensure the correct fit.

4	Attach the contact base (pos. 5 in Fig. 3-2) on the Universal Transmitter with the two plastic tapping screws (pos. 6).
5	On the Universal Transmitter, remove the two countersunk screws (pos. 7 in Fig. 3-2) and swing open the lid.

Premounting the ISO blind nuts

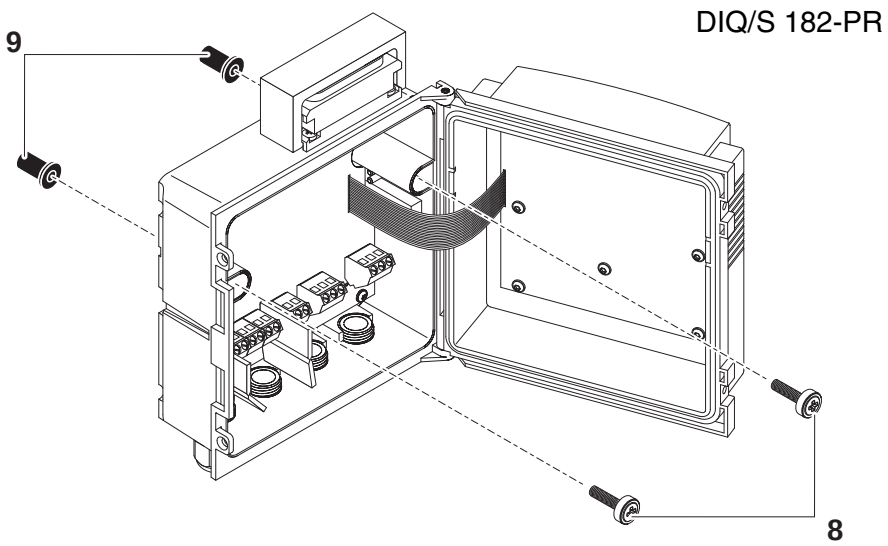

Fig. 3-3 Premounting the ISO blind nuts (variant 1)

6	Insert the cheese-head screws (pos. 8 in Fig. 3-3) with the plastic washers in the drilled mounting holes in the enclosure and loosely screw in the ISO blind nuts (pos. 9).

Stacking the MIQ modules

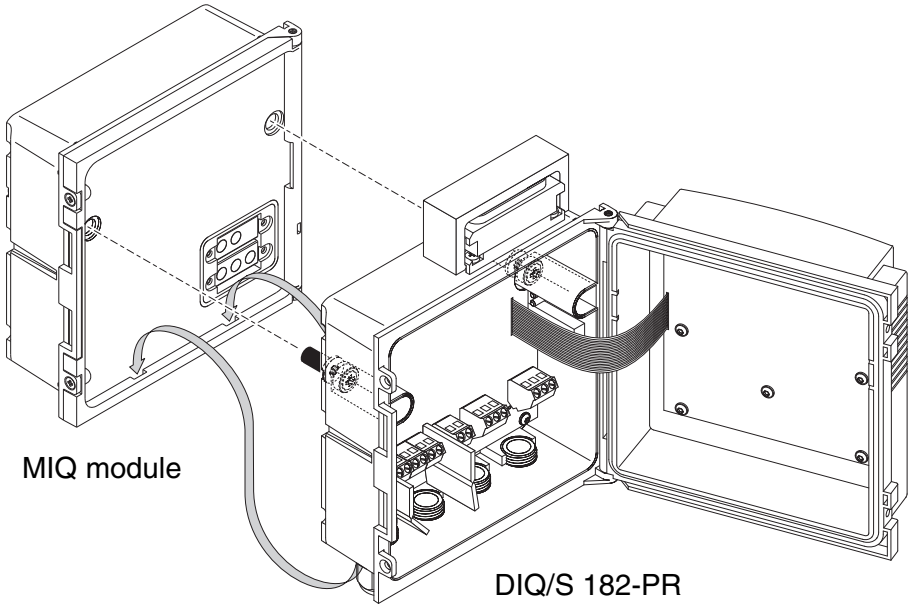

Fig. 3-4 Stacking the *MIQ modules (variant 1)*

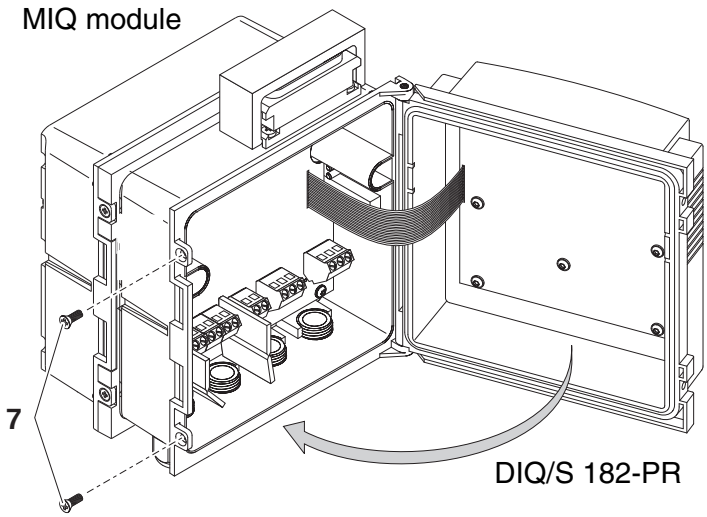

Fig. 3-5 Closing the enclosure (variant 1)

7	Attach the prepared Universal Transmitter to the lid of the MIQ module. At the same time, ensure that the two clips on the Universal Transmitter click into place in the lid of the MIQ module. Subsequently, tighten the two screws (pos. 8 in Fig. 3-3).
8	Close the lid of the Universal Transmitter and fix it with the two countersunk screws (pos. 7 in Fig. 3-5).

3.5.3 Variant 2: stack expansion backwards

Preparing the stack mounting

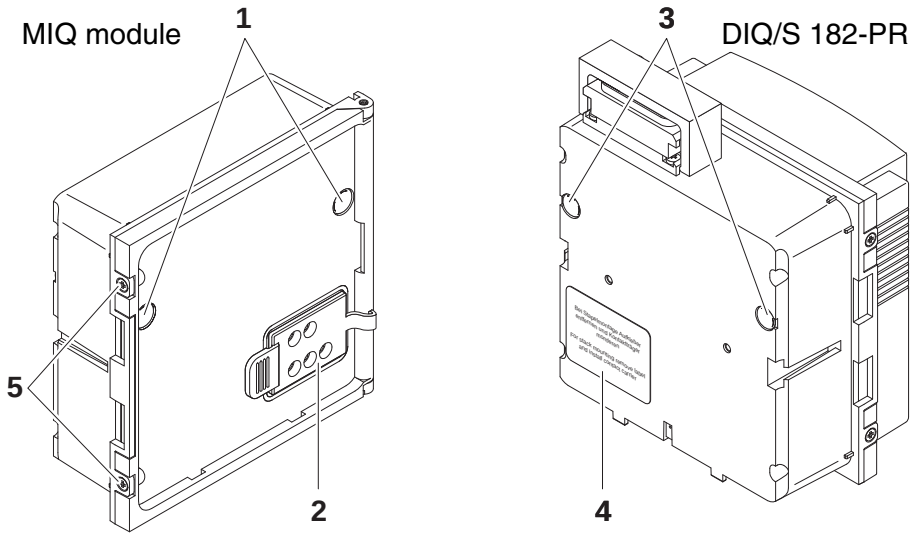

Fig. 3-6 Preparing the MIQ modules for stack mounting (variant 2)

1	Remove the covers from the drilled mounting holes (pos. 1 and 3 in Fig. 3-6).
2	Remove the contact cover (pos. 2).
3	Pull off the adhesive label (pos. 4).
4	On the MIQ module, remove the two countersunk screws (pos. 5) and swing open the module lid.

Mounting the contact base

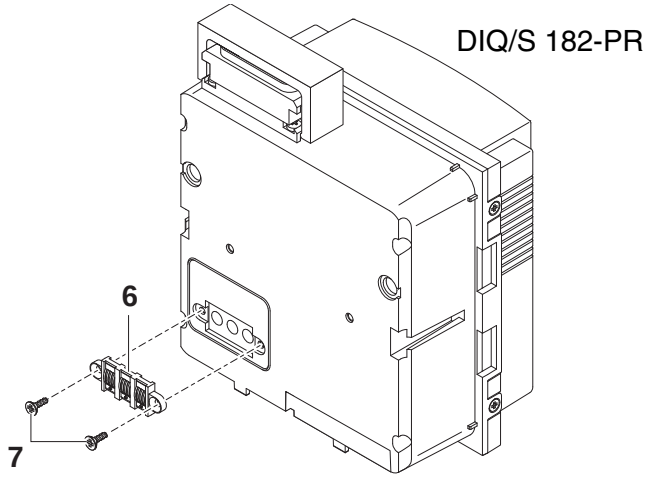

Fig. 3-7 Mounting the contact base (variant 2)

Only use the plastic tapping screws supplied for attaching the contact base. They ensure the correct fit.

5	Attach the contact base (pos. 6 in Fig. 3-7) on the Universal Transmitter with the two plastic tapping screws (pos. 7).

Premounting the ISO blind nuts

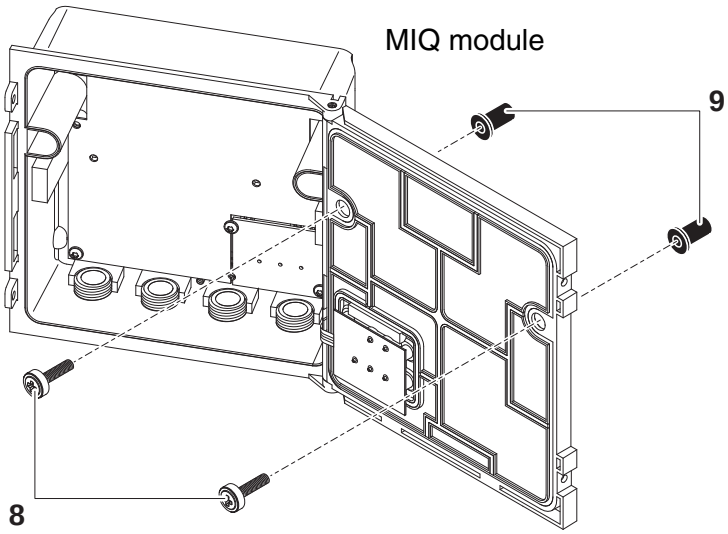

Fig. 3-8 Premounting the ISO blind nuts (variant 2)

6	Insert the cheese-head screws (pos. 8 in Fig. 3-8) with the plastic washers in the drilled mounting holes in the module lid and loosely screw in the ISO blind nuts (pos. 9).

Stacking the MIQ modules

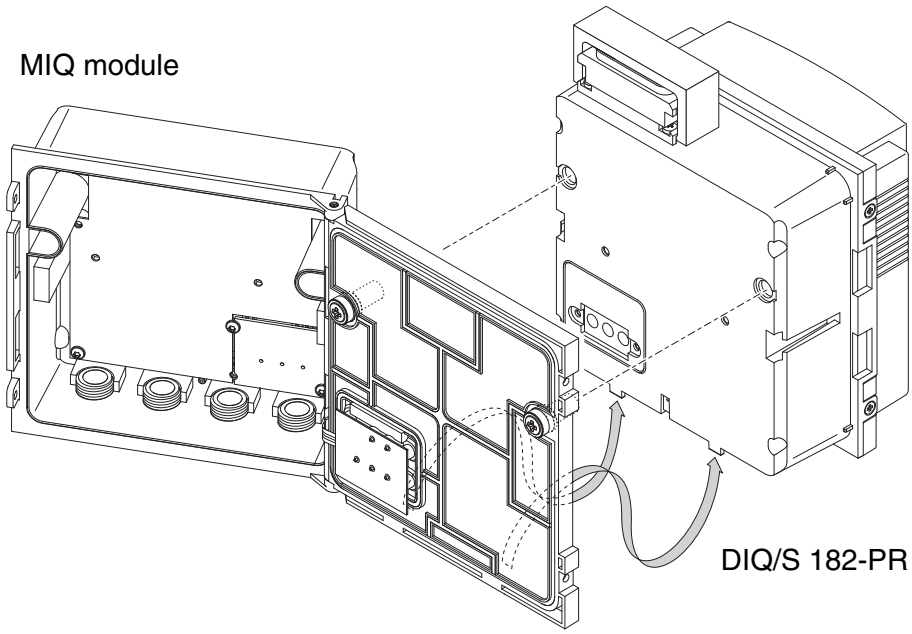

Fig. 3-9 Stacking the *MIQ modules (variant 2)*

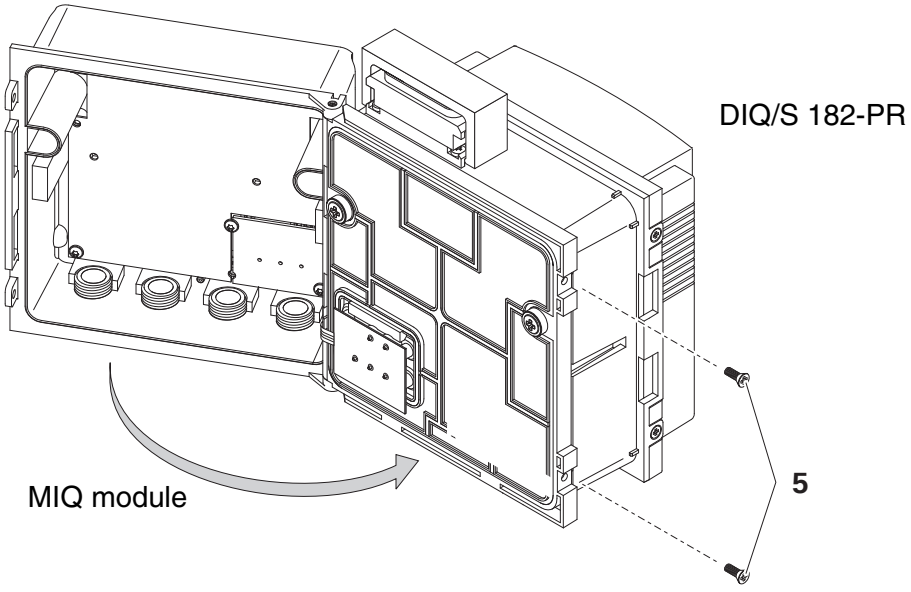

Fig. 3-10 Closing the enclosure (variant 2)

7	Attach the prepared MIQ module to the back of the Universal Transmitter. At the same time, ensure that the two clips on the Universal Transmitter click into place in the lid of the MIQ module. Subsequently, tighten the two screws (pos. 8 in Fig. 3-8).

8	Close the MIQ module and fix it with the two countersunk screws (pos. 5 in Fig. 3-10).

3.5.4 Distributed mounting

General information

For the locally separated connection between Universal Transmitter and MIQ modules and between MIQ modules the following cables can be used:

- SNCIQ cable
- SNCIQ/UG earth cable - suitable for underground laying in accordance with VDE 01816, Part 2 and DIN/VDE 0891, Part 6.

The cables are delivered as piece goods (please specify length when ordering!).



For distances under 2 m, e.g. to connect the Universal Transmitter and DIQ/JB when installing two sensors in the immediate vicinity of the Universal Transmitter, any two-wire screened cable can also be used (wire cross-section > 0.5 mm²)

NOTE

The IQ Sensor Net cable may be connected to the SENSORNET connections only. No wires of the cable may be connected with an external electrical potential. Otherwise, malfunctions could occur.

General installation instructions

Pay attention to the following points when connecting components via IQ SENSOR NET lines:

- The sum of all IQ SENSOR NET line lengths (SNCIQ, SNCIQ/UG and SACIQ) in the system may be up to a maximum of 250.
- IQ SENSOR NET lines must always be installed separately at a minimum distance of 20 cm from any other lines carrying a voltage greater than 60 V.
- The terminator switch on the terminal strip of all MIQ modules in the System 182 must be set to "Off".

Materials required

- 1 x SNCIQ or SNCIQ/UG connection cable (see chapter 10 ACCESSORIES AND OPTIONS)
- Wire end sleeves for 0.75 mm2 wire cross-section with matching crimping tool
- 1 x cable gland with seal (scope of delivery of MIQ module).

Tools

- Cable stripping knife

- Wire stripper
- Phillips screwdriver
- Small screwdriver.

Preparing the cable ends

1	Cut off the cable to the required length.
2	Remove approx. 45 mm of cable insulation (in the case of the SNCIQ/UG earth cable, remove both the inner and outer insulation).
3	Only for the SNCIQ/UG earth cable: strip the outer insulation for a further 35 mm.
4	Shorten the exposed shielding braid up to the cable sheath.
5	Shorten the two fillers (plastic inlays) up to the cable sheath.
6	Bare the red and green wires and fit them with wire end sleeves.
7	Fit the filler stranded wire with a wire end sleeve.

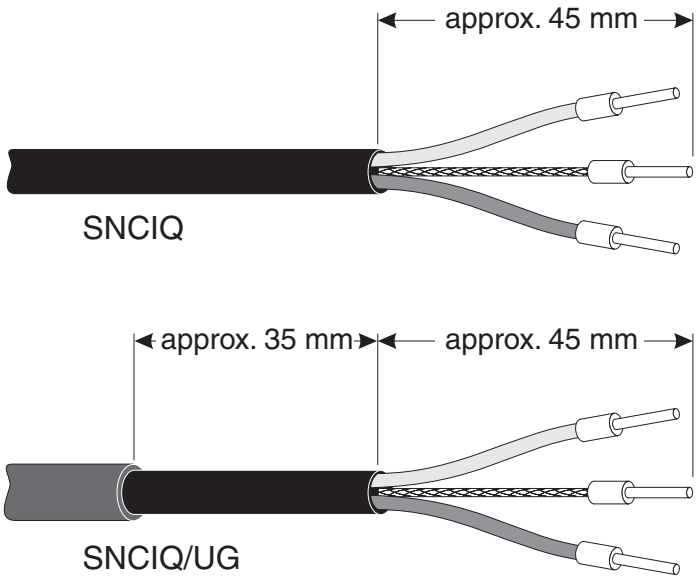

Fig. 3-11 Prepared cable end

Connecting the cables

The SNCIQ and SNCIQ/UG cables are connected to the terminal strip in the same way as the SACIQ sensor connection cable (see section 3.5.5):

1	Open the enclosure of the Universal Transmitter or MIQ module.

2	Select a free SENSORNET connection. At the same time, look out for the SENSORNET designation on the label on the bottom of the enclosure.

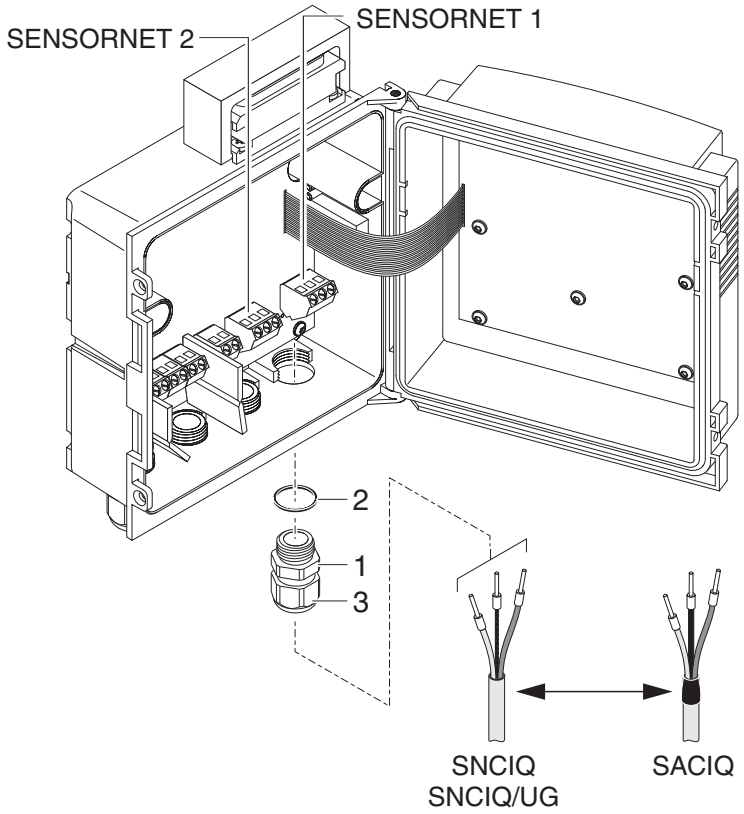

Fig. 3-12 Connecting cables (example of Universal Transmitter)

3	Screw a cable gland (pos. 1 in Fig. 3-12) with the sealing ring (pos. 2) into the enclosure.
4	Loosen the coupling ring (pos. 3 in Fig. 3-12).
5	Feed the cable through the cable gland into the enclosure.

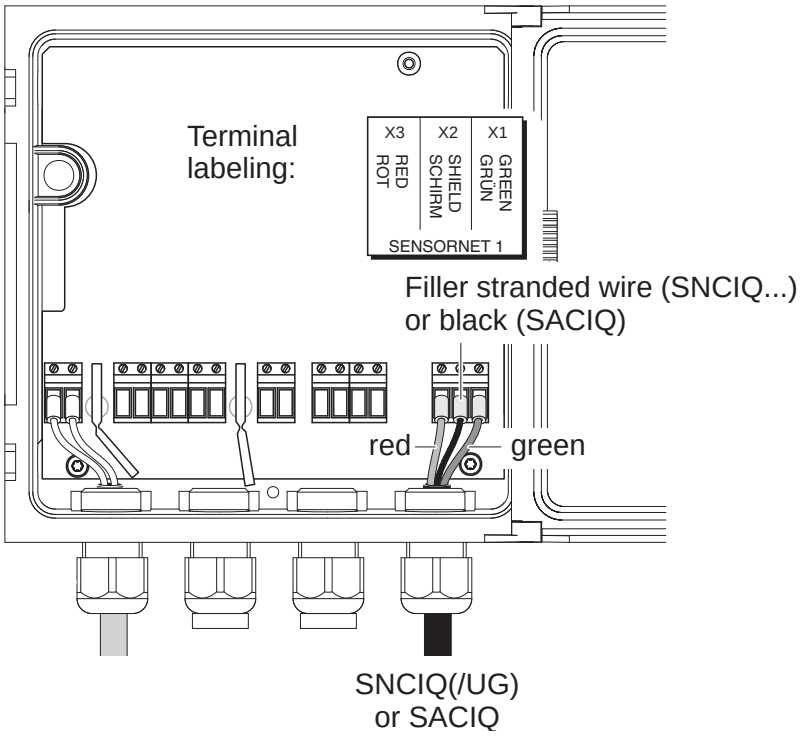

Fig. 3-13 Example: SENSORNET connection

6	Connect the cable ends to the terminal strip. At the same time, look out for the designations of the terminals (red / shield / green).
7	Tighten the coupling ring (pos. 3 in Fig. 3-12).
8	Close the enclosure.

The complete assignment of the terminal strip is shown in section 3.13.

3.5.5 Connecting IQ sensors

Sensors can be connected to all free SENSORNET connectors in the 182 system. The Universal Transmitter DIQ/S 182-PR has two SENSORNET connections.

General installation instructions

Observe the following points when attaching sensors to the system:

- The sum of all IQ SENSOR NET line lengths (SNCIQ, SNCIQ/UG and SACIQ) in the system may be up to a maximum of 250.
- IQ SENSOR NET lines must always be installed separately at a minimum distance of 20 cm from other lines that carry a voltage greater than 60 V.

Materials required

- 1 x SACIQ connection cable (see chapter 10 ACCESSORIES AND OPTIONS)
- 1 x cable gland with seal

The free end of the connection cable already has the sheath removed in the factory and all the wires are fitted with wire end sleeves.

Tools

- Phillips screwdriver
- Small screwdriver.

Connecting the SACIQ cable to the Universal Transmitter or MIQ module

The connection of the SACIQ cable to the terminal strip is described in section 3.5.4 (see CONNECTING THE CABLES, Seite 15).

NOTE

The SACIQ sensor connection cable may only be connected to the SENSORNET connections. No wires of the cable may be connected with an external electrical potential. Otherwise, malfunctions could occur.

Connecting the sensor to the connection cable

1	Remove the protective caps from the plug connections of the IQ sensor and SACIQ sensor connection cable and keep them safe.
2	Plug the socket of the SACIQ sensor connection cable onto the plug head connector of the IQ sensor. At the same time, rotate the socket so that the pin in the plug head connector (1) clicks into one of the two holes in the socket.
3	Then, screw the coupling ring (2) of the IQ sensor connection cable on the IQ sensor up to the stop.

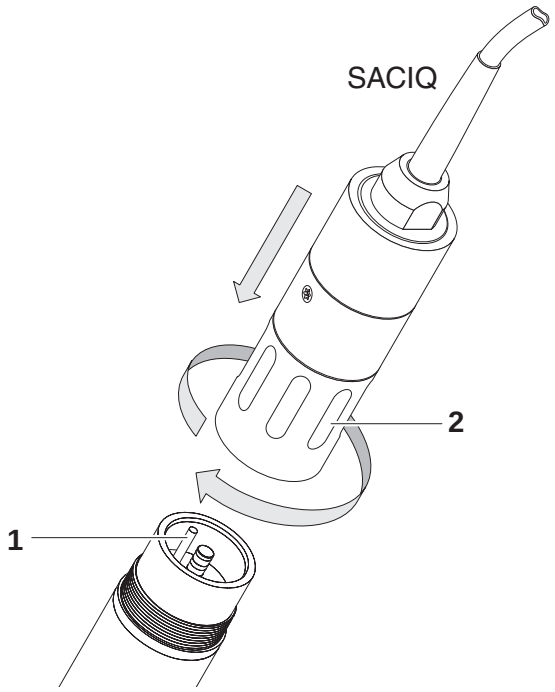

Fig. 3-14 Connecting the SACIQ cable with the IQ sensor

For further instructions on the mounting of IQ sensors at the application location, please see the respective manuals (immersion depths, etc.).

3.6 On site mounting of the Universal Transmitter and MIQ Modules

3.6.1 General information

The DIQ/S 182-PR and the DIQ and MIQ modules have a comprehensive program of mounting accessories, which can be used to adapt the installation to the most varied requirements.

NOTE

Components installed outside must always be protected by a sun shield against the effects of the weather (snow, ice and direct solar radiation). Otherwise, malfunctions can result. Always mount the Universal Transmitter in an upright position. Do not under any circumstances install MIQ modules without rain protection with the lid facing upwards (danger of retained humidity and penetration of moisture).



CAUTION

No contact base may be mounted on the back of the module (danger of short-circuit!) if the module is mounted on a wall, a sun shield, or a top hat rail.

Installation options

The most important types of installation for the Universal Transmitter are described in the following chapters:

- **Mounting on a mounting stand with the SSH/IQ sun shield:** The SSH/IQ sun shield provides enough space for the Universal Transmitter and two MIQ modules (section 3.6.2).
- **Wall mounting:** The Universal Transmitter or MIQ module is permanently screwed to a wall. For wall mounting, use the WMS/IQ mounting set (see chapter 10 ACCESSORIES AND OPTIONS).
- **Panel mounting:** The Universal Transmitter or MIQ module is installed in the aperture of a panel (section 3.6.3).
- **Top hat rail mounting:** The Universal Transmitter or MIQ module is mounted on a 35 mm top hat rail with the aid of a bracket, e.g. in a control cabinet. The connection can be released again with one simple movement (section 3.6.4).

The following chapters describe the mounting of the Universal Transmitter. MIQ modules are mounted in the same way.

3.6.2 Mounting on a mounting stand with the SSH/IQ sun shield

Materials required

- SSH/IQ sun shield (see chapter 10 ACCESSORIES AND OPTIONS).

Tools

- 4 mm set screw wrench
- Phillips screwdriver.

Mounting the sun shield on a mounting stand

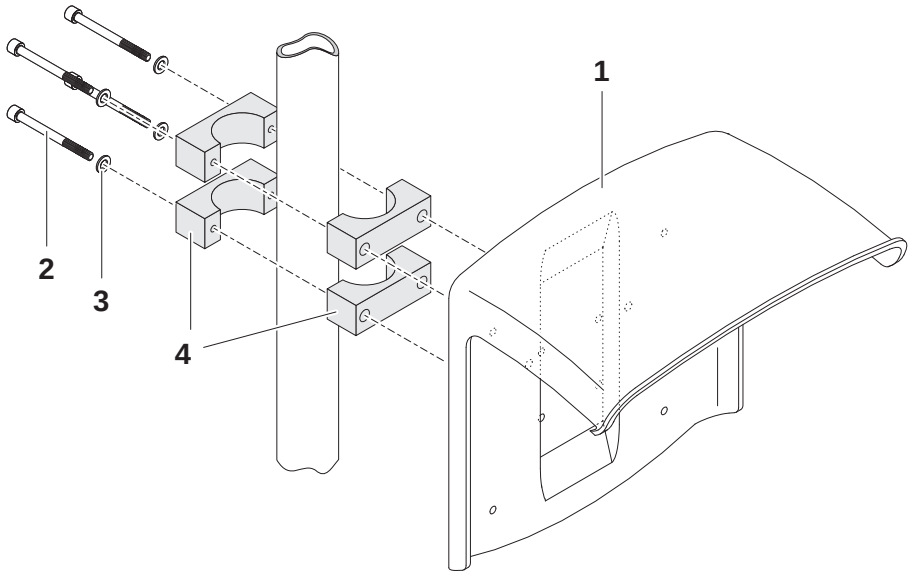

Fig. 3-15 Mounting the SSH/IQ sun shield on a mounting stand

1	Screw the sun shield (pos. 1 in Fig. 3-15) with the four hexsocket head screws (pos. 2), the washers (pos. 3) and the clamps (pos. 4) at the required height on the mounting stand from the back.

Premounting the ISO blind nuts

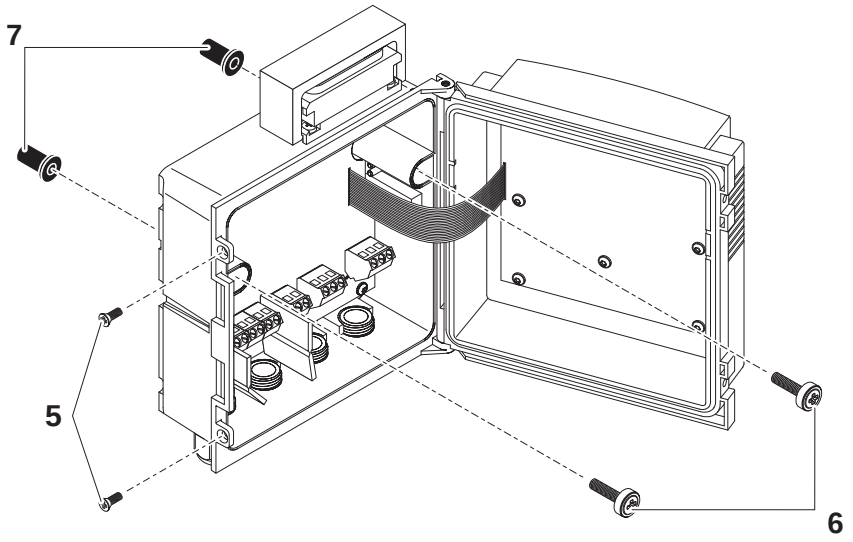

Fig. 3-16 Mounting the sun shield: Premounting the ISO blind nuts

2	Remove the two countersunk screws (pos. 5 in Fig. 3-16) and swing open the lid.
3	Insert the cheese-head screws (pos. 6 in Fig. 3-16) with the plastic washers in the drilled mounting holes and loosely screw in the ISO blind nuts (pos. 7).

Mounting the Universal Transmitter on the sun shield

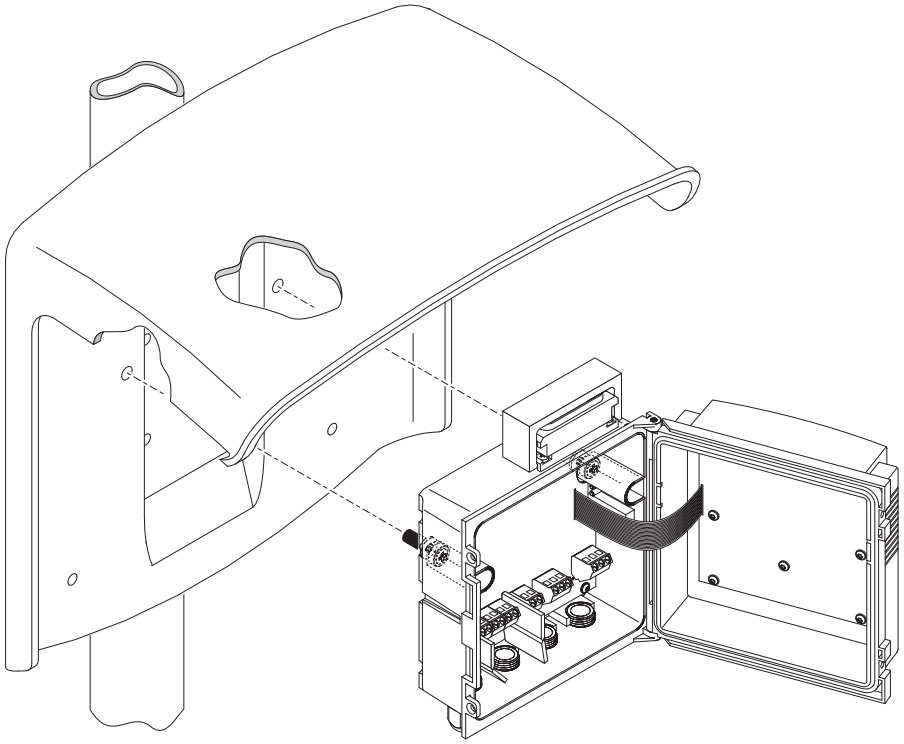

Fig. 3-17 Mounting the Universal Transmitter on the SSH/IQ sun shield

4	Position the Universal Transmitter on the sun shield and fix it into place with the two screws (pos. 6 in Fig. 3-16).
5	Close the lid and fix it with the two countersunk screws (pos. 5 in Fig. 3-16).

PROFIBUS cable route

Guide the PROFIBUS cable in the sun shield recess behind the Universal Transmitter to the top of the housing

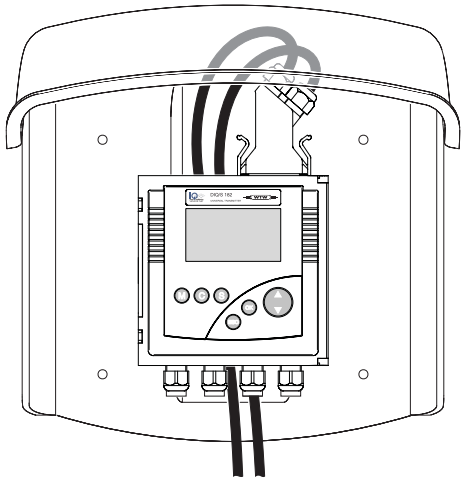

Fig. 3-18 Universal Transmitter with PROFIBUS cable on the sun shield

3.6.3 Panel mounting

Materials required

- PMS/IQ kit for panel mounting (see chapter 10 ACCESSORIES AND OPTIONS).

Tools

- 3 mm set screw wrench (contained in the panel installation kit).

Switch panel aperture

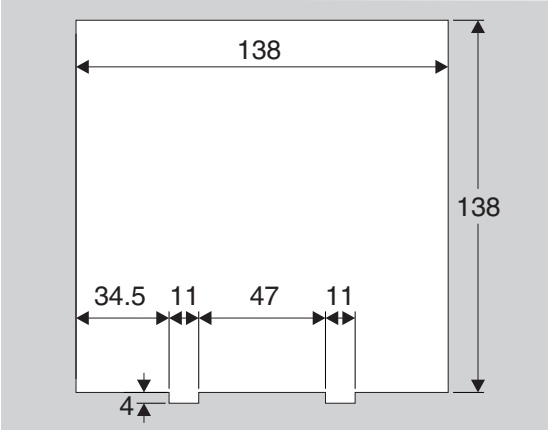

Maximum thickness 3 mm

Fig. 3-19 Mounting aperture in the switch panel (dimensions in mm)

The space required on the panel for the Universal Transmitter is given in the dimension drawings in section 9.5.

Mounting the Universal Transmitter in the panel

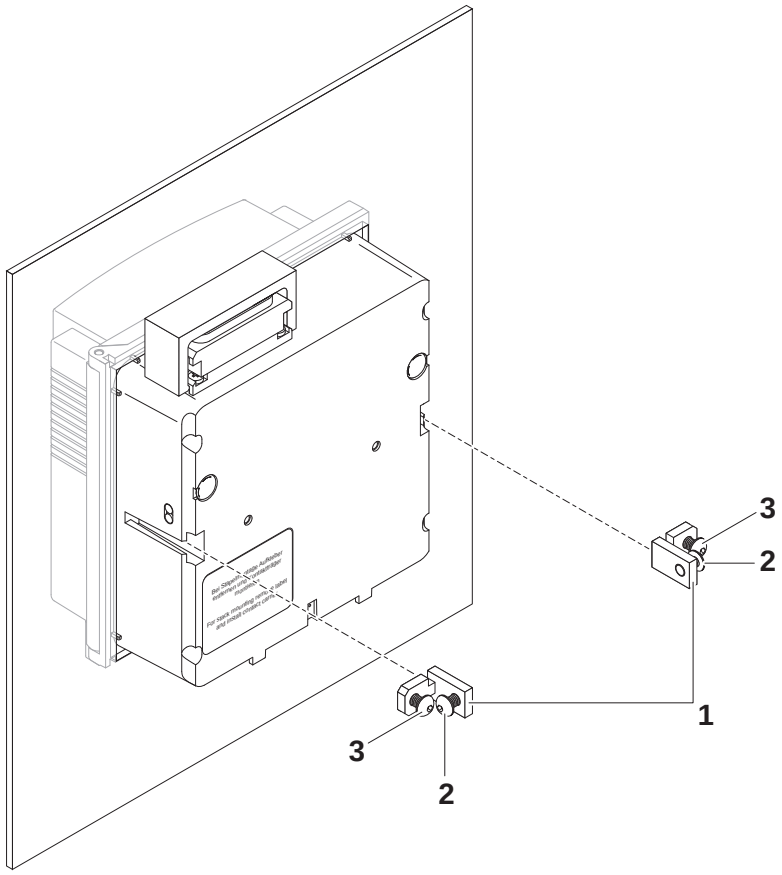

Fig. 3-20 Mounting the Universal Transmitter in the panel

1	Insert the Universal Transmitter in the panel aperture from the front.
2	Slightly unscrew the screws (pos. 2 and 3) of the two angle brackets (pos. 1 in Fig. 3-20), but do not remove them.
3	Push in the two angle brackets - as shown in Fig. 3-20 - into the lateral guides of the Universal Transmitter up to the stop.
4	Tighten the screws (pos. 2).
5	Screw in the screws (pos. 3) until the screws rest snugly against the panel.

3.6.4 Top hat rail mounting

Materials required

- THS/IQ kit for top hat rail mounting (see chapter 10 ACCESSORIES AND OPTIONS).

Tools

- Phillips screwdriver.

Mounting the Universal Transmitter on a top hat rail

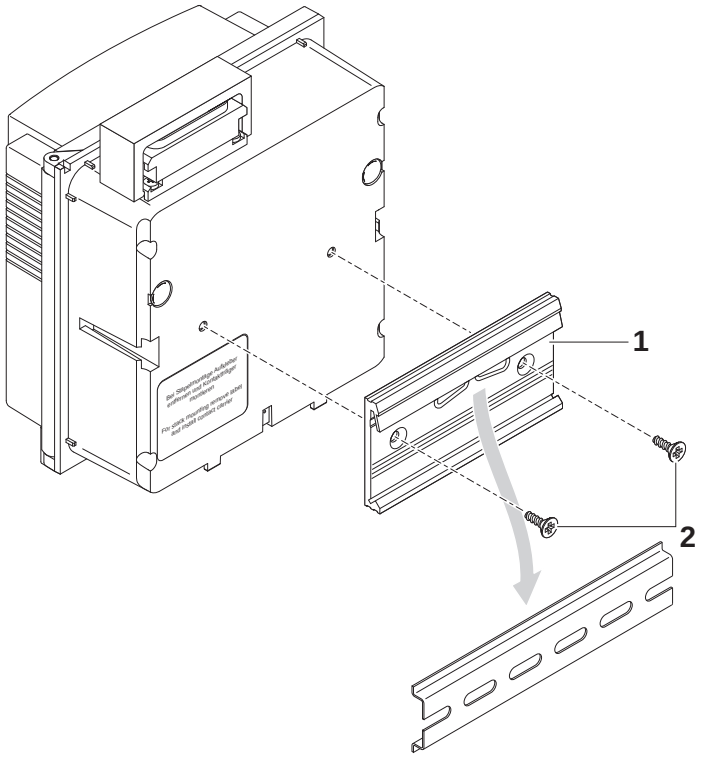

Fig. 3-21 Mounting the Universal Transmitter on a top hat rail

1	Screw the clamping assembly (pos. 1 in Fig. 3-21) onto the back of the Universal Transmitter with the two plastic tapping screws (pos. 2).
2	Attach the Universal Transmitter onto the top hat rail from above using the clamping assembly and press against the rail until the clamping assembly clicks into place. The Universal Transmitter can be moved sideways afterwards.
3	To unhook the Universal Transmitter, press it downward and pull it forward at the bottom.

3.7 Using DIQ modules (accessories)

The various application possibilities of the DIQ modules are shown by means of examples in section 3.12.

3.7.1 DIQ/JB

The DIQ/JB module is a passive branching module and can be used for the following purposes

- To extend the SACIQ sensor connection cable, e.g. to connect a sensor that is located farther away to the Universal Transmitter.
- To branch a line at the end of an extension.

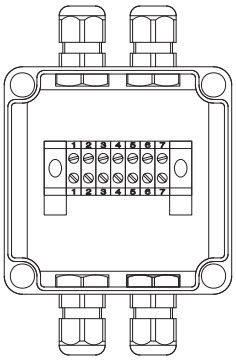

Fig. 3-22 DIQ/JB open.

The DIQ/JB module has seven potential free terminals. To extend or branch lines, connect the three IQ SENSOR NET wires to each other one-to-one at any terminals

- green <-> green
- red <-> red
- black/filler stranded wire <-> black/filler stranded wire.

3.7.2 DIQ/CHV

The DIQ/CHV module is a valve module for the automatic relay-controlled compressed air-driven cleaning function in the 182 system. It provides four additional potential free terminals to branch (extend) interface lines. For each sensor that is to have compressed air cleaning a DIQ/CHV is required.

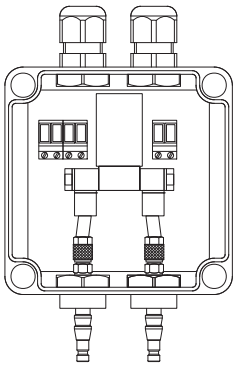

Fig. 3-23 DIQ/CHV open.

3.7.3 Installation of the modules

The DIQ module enclosure is designed like a commercial connection socket and can be mounted directly on a wall. For mounting on a WTW mounting stand, WTW provides the MS/DIQ mounting set. It contains a pipe clip for the mounting stand and provides enough space for two DIQ modules. For assembly use the screws and blind nuts provided with the MS/DIQ as demonstrated in the following figure

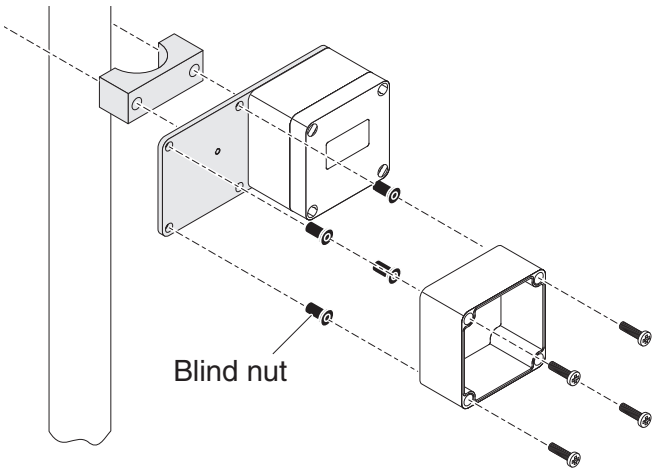

Fig. 3-24 Mounting DIQ modules with the MS/DIQ mounting set.

3.8 Electrical connections: General instructions

Cable glands

All electric cables are fed from below via prepared openings in the enclosure of the DIQ/S 182-PR and the MIQ modules. Cable glands with different clamping ranges are included with the DIQ/S 182-PR to provide sealing between the cable and enclosure as well as for strain relief. Select the matching cable gland for the respective cable diameter:

- **Small**, clamping range 4.5 to 10 mm. This cable gland is suitable for all IQ SENSOR NET cables (including earth cable after stripping the outer insulation, see section 3.5.4) and IQ SENSOR NET sensor connection cable.

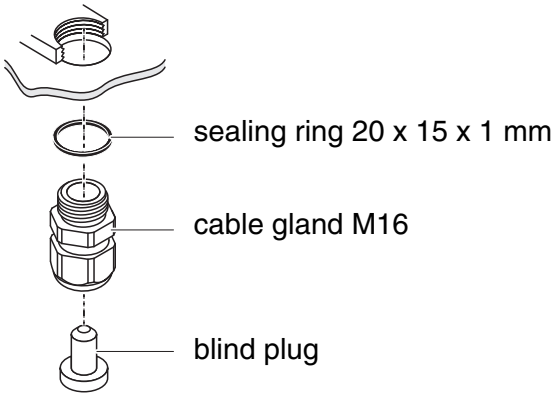

- **Large**, clamping range 7 to 13 mm. This cable gland is required for cable sheaths with an outside diameter of more than 10 mm and is screwed into the enclosure via an extension piece.

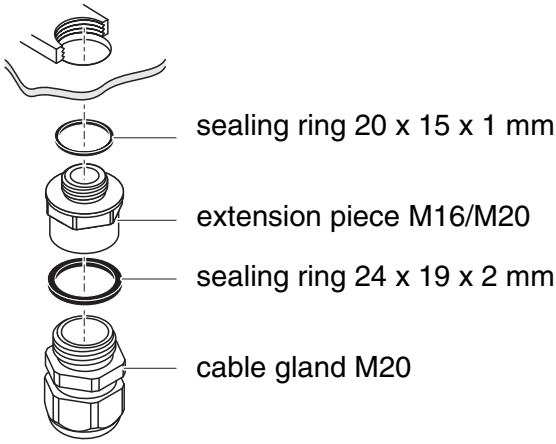

If necessary, you can order other sizes of cable gland (see chapter 10 ACCESSORIES AND OPTIONS).

General installation instructions

Observe the following points when attaching connecting wires to the terminal strip

- Shorten all wires to be used to the length required for the installation
- Always fit all the ends of the wires with wire end sleeves before connecting them to the terminal strip
- Any wires that are not used and project into the enclosure must be cut off as closely as possible to the cable gland.
- Screw a small cable gland with sealing ring into each remaining free opening and close it with a blind plug.



WARNING

No free wires must be allowed to project into the enclosure. Otherwise, there is a danger that areas safe to contact could come into contact with dangerous voltages. This could result in life threatening electric shock when working with the DIQ/S 182-PR. Always cut off any wires that are not in use as closely as possible to the cable gland.

3.9 Connecting the voltage supply

The two following paragraphs describe how to connect both models of the DIQ/S 182-PR Universal Transmitter to the voltage supply. How to connect additional power supply modules is described in the operating manual of the respective power supply module.

3.9.1 DIQ/S 182-PR (Line power version)

WARNING

If the power supply is incorrectly connected, it may represent a danger to life from electric shock. Pay attention to the following points during installation:

- **The DIQ/S 182-PR Universal Transmitter may only be connected by a trained electrician.**
- **The connection of the DIQ/S 182-PR Universal Transmitter to the power supply may only be carried out when it is not carrying any voltage.**
- **The power supply must fulfill the specifications given on the nameplate and in chapter 9 TECHNICAL DATA.**
- **When installed in a building, a switch or power switch must be provided as an interrupt facility for the System 182. The interrupt facility must**
  - **be installed in the vicinity of the DIQ/S 182-PR Universal Transmitter, easily accessible by the user, and**
  - **be labeled as the interrupt facility for the DIQ/S 182-PR Universal Transmitter.**
- **After the DIQ/S 182-PR Universal Transmitter has been installed, it may only be opened if the line voltage has been switched off beforehand.**

Materials required

- Wire end sleeves, suitable for the power line, with suitable crimping tool
- 1 x screwed cable gland with sealing ring (scope of delivery of the Universal Transmitter).

Tools

- Cable stripping knife
- Wire stripper
- Phillips screwdriver
- Small screwdriver.

Preparing the power cable

1	Cut off the cable to the required length.
2	Strip the cable insulation for approx. 45 mm.
3	Bare the wires of phases L and N and fit them with wire end sleeves.
4	If present, cut off the ground wire at the end of the cable sheath.

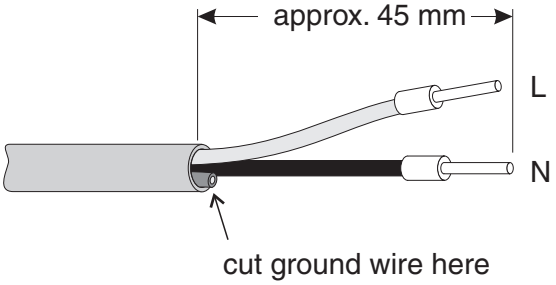

Fig. 3-25 Prepared power cable.

NOTE

The ground wire must not project into the enclosure. Otherwise, malfunctions could occur.

Connecting the power line

5	Open the enclosure of the Universal Transmitter.

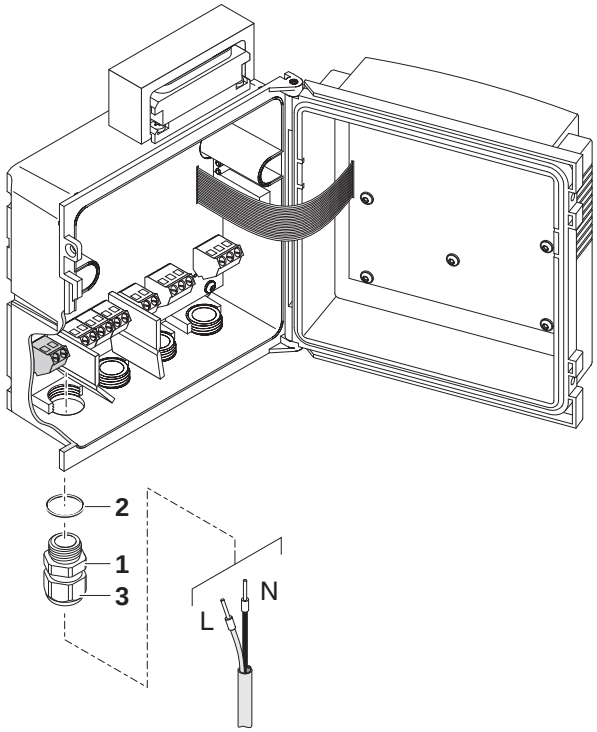

Fig. 3-26 Inserting the supply line.

6	Screw a cable gland (pos. 1 in Fig. 3-26) with sealing ring (pos. 2) into the enclosure below the power supply connection.
7	Loosen the coupling ring (pos. 3).
8	Feed the power line through the cable gland into the enclosure. When doing so bend the flexible divider (pos. 4) to the right.

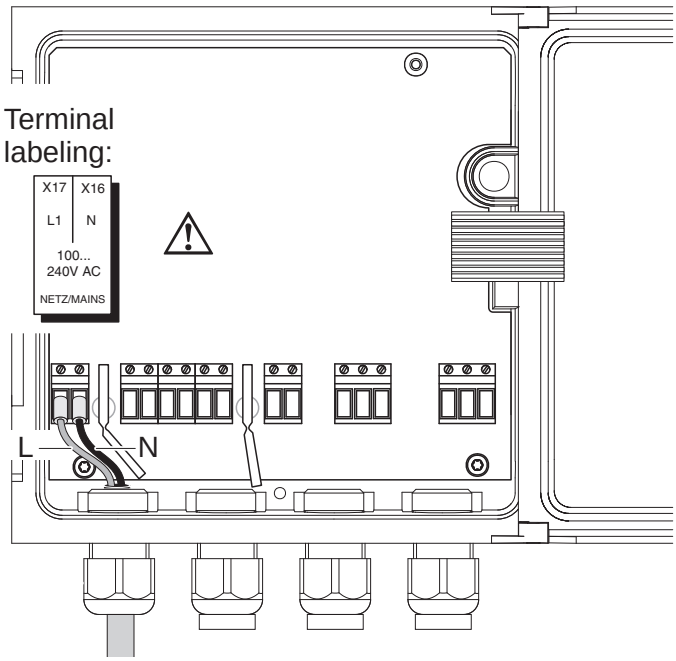

Fig. 3-27 Line power connection.

The complete assignment of the terminal strip is shown in section 3.13.

9	Connect phases L and N to the terminal strip. Make sure that the cable assignment agrees with the specification on the terminal label under the terminal strip.
10	Tighten the coupling ring (pos. 3 in Fig. 3-26).

WARNING
No free wires must be allowed to project into the enclosure. Otherwise, there is a danger that areas safe to contact could come into contact with dangerous voltages. Always cut off any wires that are not in use as closely as possible to the cable gland.

11	Close the enclosure of the Universal Transmitter.

3.9.2 DIQ/S 182-PR/24V (24 V version)



WARNING

If the 24 V AC/DC supply is incorrectly connected, it may represent a danger to life from electric shock. Pay attention to the following points during installation:

- **The DIQ/S 182-PR Universal Transmitter may only be connected by a trained electrician.**
- **The 24 V AC/DC supply must meet the specifications quoted on the name plate and in chapter 9 TECHNICAL DATA** (protective low voltage SELV).
- **The connection of the DIQ/S 182-PR Universal Transmitter to the power supply may only be carried out when it is not carrying any voltage.**
- **When installed in a building, a switch or power switch must be provided as an interrupt facility for the System 182. The interrupt facility must**
  - **be installed in the vicinity of the DIQ/S 182-PR Universal Transmitter, easily accessible by the user, and**
  - **be labeled as the interrupt facility for the DIQ/S 182-PR Universal Transmitter.**



Rechargeable battery systems should have a deep discharge protection. The DIQ/S 182-PR/24V does not have any built-in deep discharge protection.

Materials required

- Wire end sleeves, suitable for the 24 V AC/DC feed line, with suitable crimping tool
- 1 x screwed cable gland with sealing ring (scope of delivery of the Universal Transmitter).

Tools

- Cable stripping knife
- Wire stripper
- Phillips screwdriver
- Small screwdriver.

Preparing the 24 V AC/DC line

1	Cut off the cable to the required length.
2	Strip the cable insulation for approx. 45 mm.
3	Bare the wires 1 and 2 and fit them with wire end sleeves.

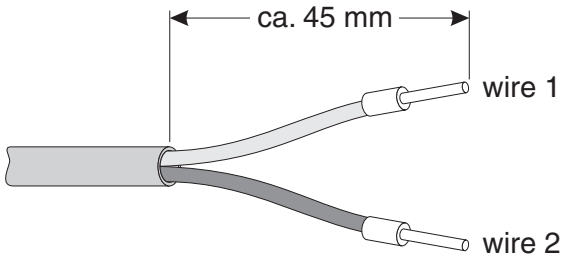

Fig. 3-28 Prepared 24 V AC/DC line.

Connecting the 24 V AC/ DC line

4	Open the enclosure of the Universal Transmitter.

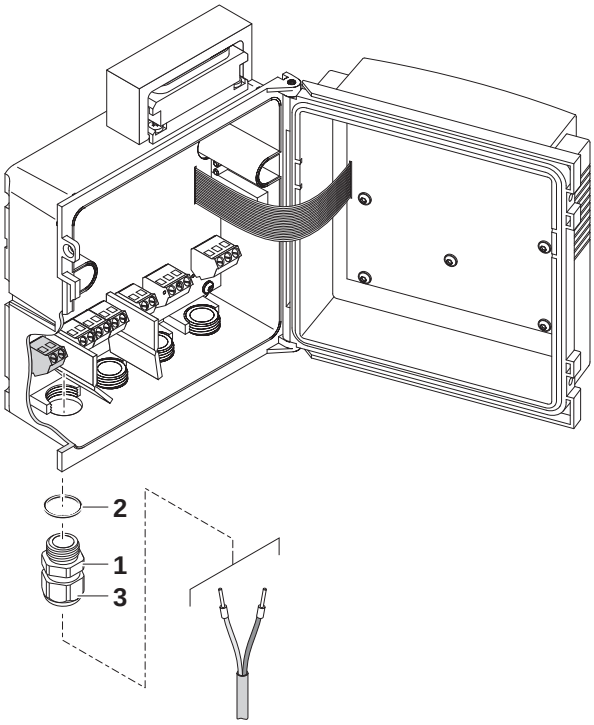

Fig. 3-29 Inserting the 24V AC/DC line

5	Screw a cable gland (pos. 1 in Fig. 3-29) with sealing ring (pos. 2) into the enclosure below the 24 V AC/DC connection.
6	Loosen the coupling ring (pos. 3).
7	Feed the 24 V AC/DC line through the cable gland into the enclosure. When doing so bend the flexible divider (pos. 4) to the right.

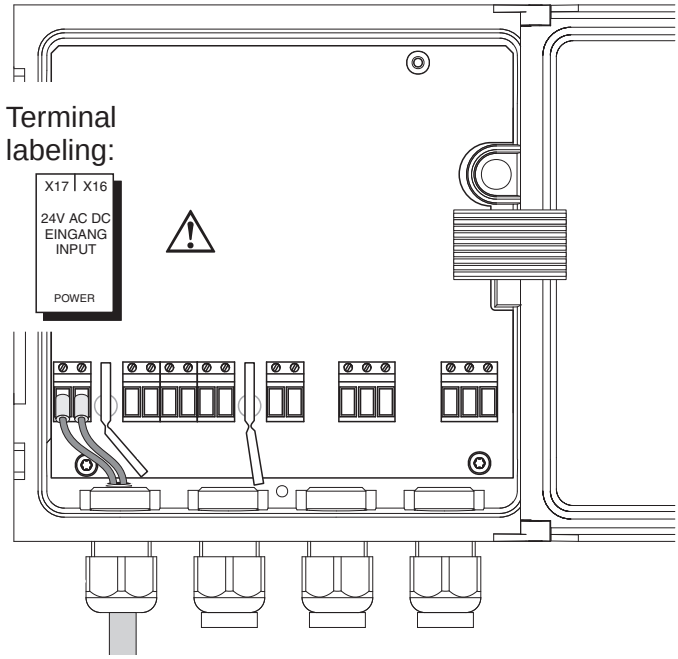

Fig. 3-30 24 V AC/DC connection.

The complete assignment of the terminal strip is shown in section 3.13.

8	Connect wires 1 and 2 to the terminal strip. Make sure that the cable assignment agrees with the specification on the terminal label under the terminal strip.
9	Tighten the coupling ring (pos. 3 in Fig. 3-29).

WARNING
No free wires must be allowed to project into the enclosure. Otherwise there is the danger of short circuits that can cause a fire. Always cut off any wires that are not in use as closely as possible to the cable gland.

10	Close the enclosure of the Universal Transmitter.

3.10 Connections to the relay outputs

3.10.1 General installation instructions



WARNING

If external electrical circuits that are subject to the danger of physical contact are incorrectly connected to the relay contacts, there may be a danger of life threatening electric shock. Electrical circuits are regarded to be subject to the danger of physical contact when there are voltages higher than the Safety Extra Low Voltage (SELV).

Pay attention to the following points during installation:

- **Electrical circuits subject to the danger of physical contact must only be connected by a qualified electrician.**
- **Electrical circuits subject to the danger of physical contact must only be connected when they are voltage-free.**
- **If electrical circuits subject to the danger of physical contact are switched with a relay, no circuit that is not subject to this danger (e. g. the DIQ/CHV module) may be operated on the further relays.**
- **Switching voltages and switching currents on the relay contacts must not exceed the values specified in chapter 9 TECHNICAL DATA. Protect electrical circuits against currents that are too high with an electrical fuse.**
- **Only single-phase consumers can be switched with the relays. Under no circumstances must multiphase consumers be switched with the aid of several relays (example three-phase current driven pumps). Always switch multiphase consumers via a protective relay.**
- **After the Universal Transmitter has been installed, it may only be opened if all external voltages have been switched off beforehand.**

Materials required

- Wire end sleeves, suitable for the connecting wires, with suitable crimping tool
- 4 x screwed cable gland with sealing ring (scope of delivery of the Universal Transmitter).

Tools

- Cable stripping knife
- Wire stripper
- Phillips screwdriver
- Small screwdriver

Connecting lines to the terminal strip

11	Open the enclosure of the Universal Transmitter.

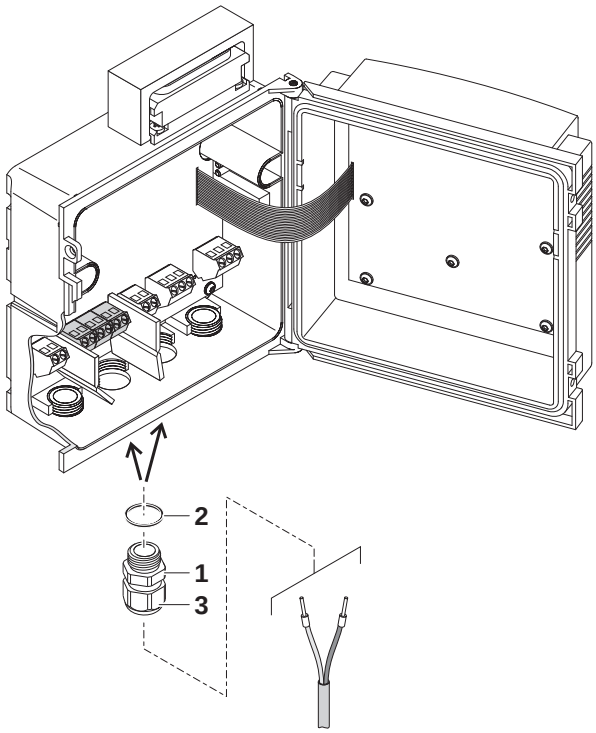

Fig. 3-31 Inserting lines

The complete assignment of the terminal strip is shown in section 3.13.

12	Screw a cable gland (pos. 1 in Fig. 3-31) with the sealing ring (pos. 2) into the enclosure below the respective connections.
13	Loosen the coupling ring (pos. 3).
14	Feed the line through the cable gland in the enclosure.
15	Connect the wires to the terminal strip. While doing so, pay attention to the specifications on the label located under the terminal strip.
16	Tighten the coupling ring (pos. 3).

WARNING
No free wires must be allowed to project into the enclosure. Otherwise, there is a danger that areas safe to contact could come into contact with dangerous voltages. This could result in life

threatening electric shock when working with the Universal Transmitter. Always cut off any wires that are not in use as closely as possible to the cable gland.

17	Close the enclosure of the Universal Transmitter.

3.10.2 Usage of the auxiliary voltage

The Universal Transmitter has a 24 V output (designation, HILFSSPANNUNG or AUXILIARY VOLTAGE on the terminal strip). You can use this auxiliary voltage for the relay-controlled opening of the valve in a DIQ/CHV valve module for the compressed air-driven sensor cleaning function. To do so, you have to connect the auxiliary voltage output, a free relay contact and the valve connection in the DIQ/CHV in series. Bridge a terminal of the auxiliary voltage output with a terminal of a relay output and run a control line from the remaining terminals to the valve module.

NOTE
The auxiliary voltage must not be used for other purposes.

Connection scheme for <u>one</u> sensor with compressed air cleaning

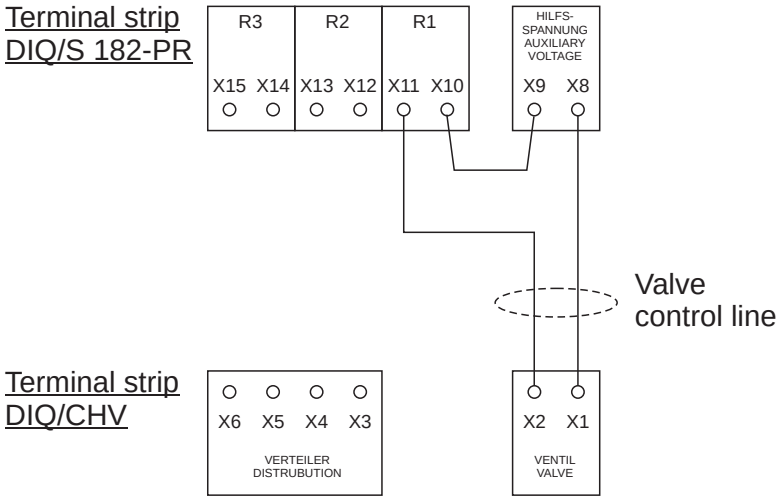

NOTE
Run the bridge below the divider so the bridge does not bump against the circuit board in the lid when the enclosure is closed.

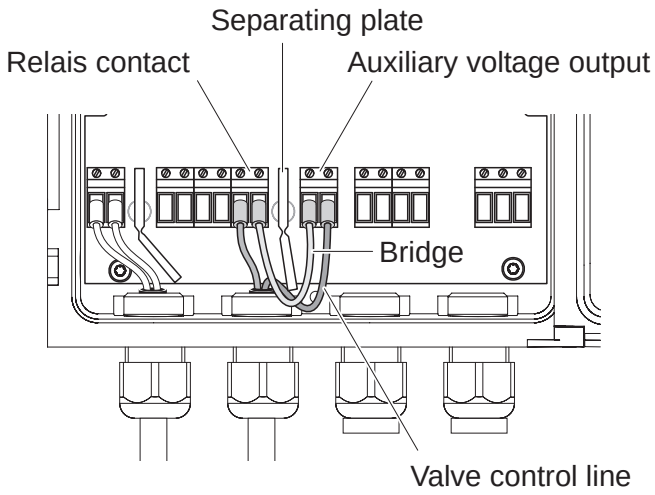

Installation examples with one and two sensors with compressed air cleaning can be found in section 3.12.

3.11 Commissioning

Start checklist and system start

Before starting the system, carry out the system check using the following checklist. Always carry out the check

- before the initial commissioning
- before any further commissioning if the system has been previously extended or modified.

Start checklist

1 Are all system components correctly connected with one another (see section 3.5)?

2 Is the Universal Transmitter and all additional power supply modules correctly connected to the voltage supply (see section 3.8)?

3 Do the line voltage and line frequency agree with the data on the name plate of the Universal Transmitter and all additional power supply modules?

4 Are all IQ sensors ready for measuring, e.g. a D.O. sensor filled with electrolyte solution?

Starting the system

Switch on the voltage supply of the Universal Transmitter and all additional power supply modules. As soon as the system is successfully initialized, the measured value display appears. In the case of IQ sensors that are not yet providing measured values, "Init" appears temporarily

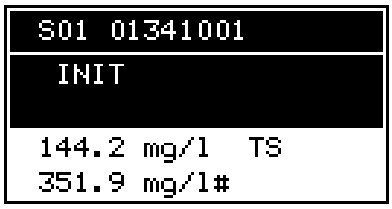

Fig. 3-32 Display during the start phase

Assign a name to each IQ sensor after putting it into operation for the first time so you can identify it more easily. How to assign a sensor name is described in section 5.3 on page 5-2.

If the system start failed, see chapter 8 WHAT TO DO IF ....

3.12 Installation examples

3.12.1 Connecting two sensors without compressed air cleaning

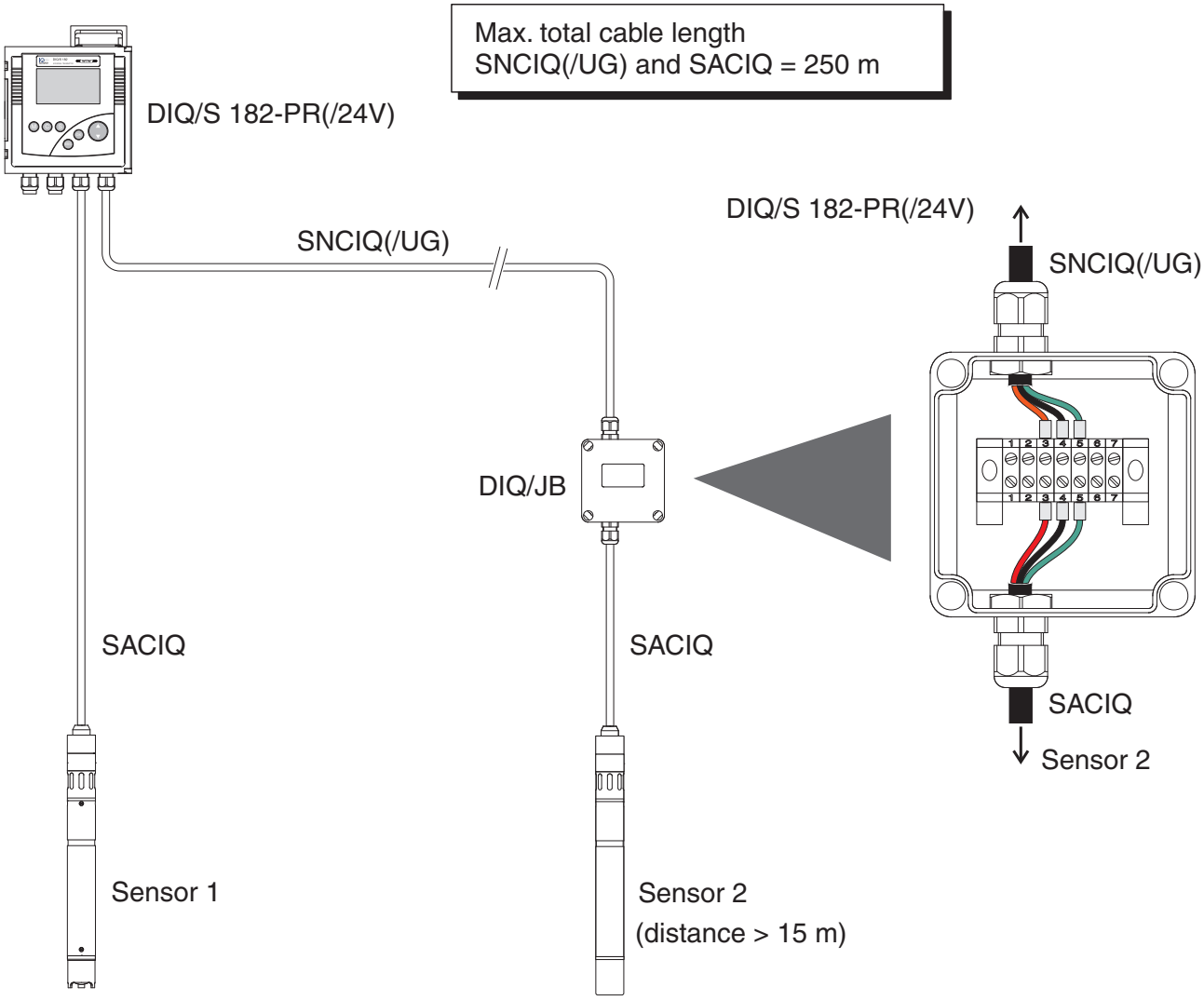

Connection scheme of the DIQ/JB

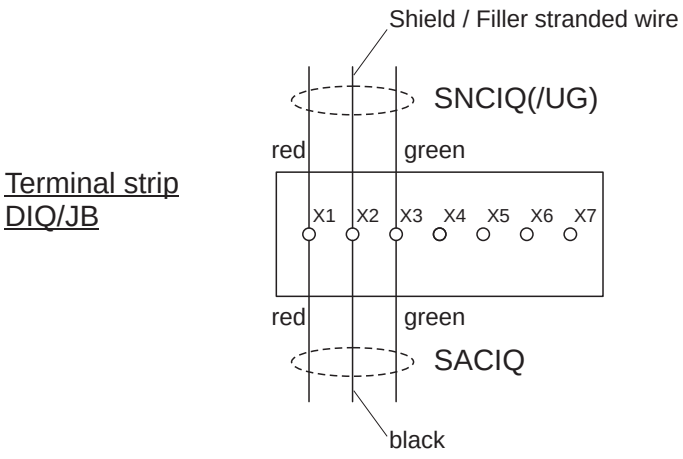

3.12.2 Connecting two sensors with compressed air cleaning

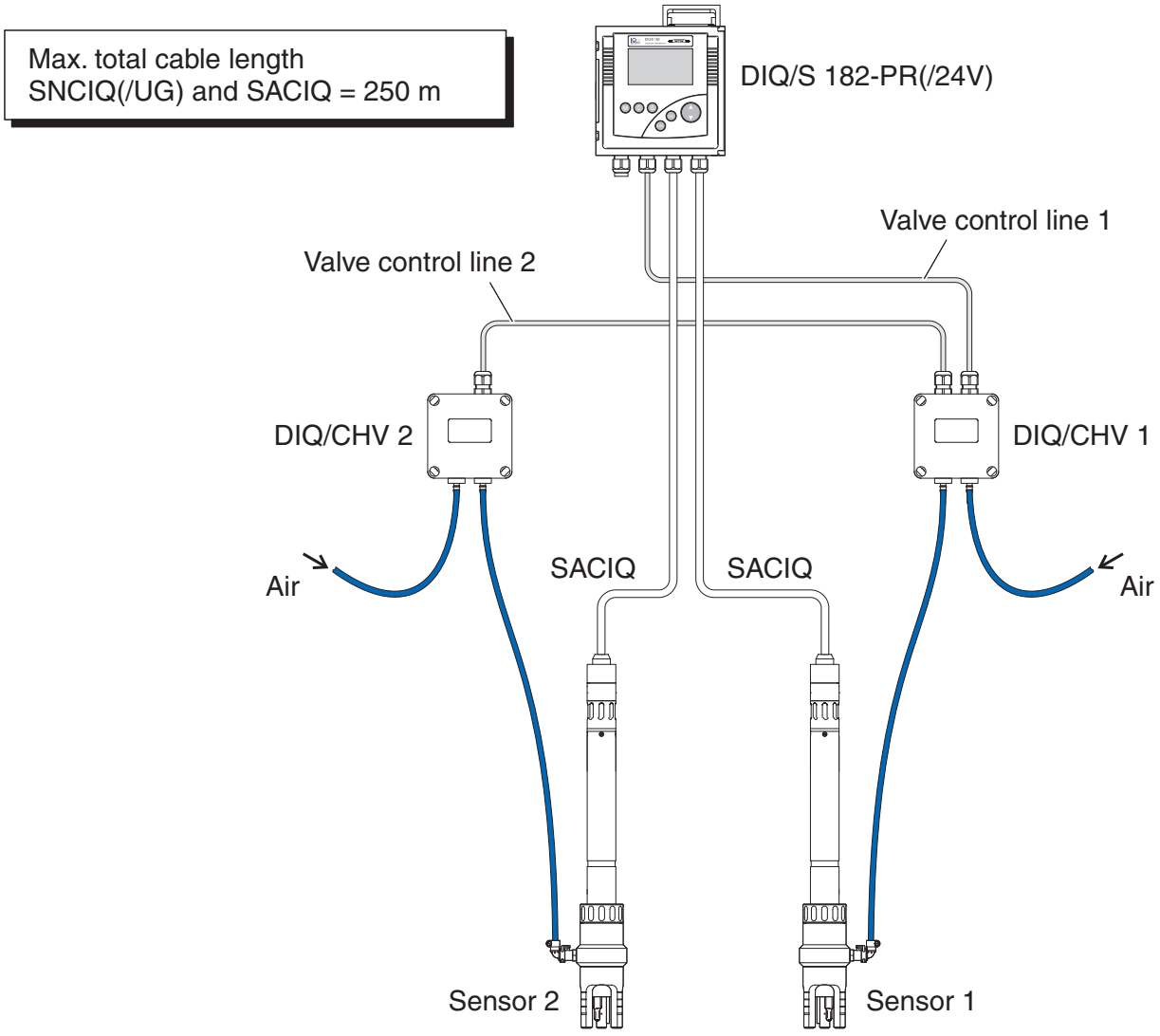

Connection scheme of valve control

Example:
Relay 1 controls the cleaning of sensor 1.
Relay 2 controls the cleaning of sensor 2.

Variant: Relay 1 controls the cleaning of both sensors. Cleaning of both sensors is carried out with the same settings.

WARNING
In this configuration, the free switching contact (here: R3) may be used to switch SELV voltages only.

WARNING
No free wires must be allowed to project into the enclosure. Otherwise, there is a danger that areas safe to contact could come into contact with dangerous voltages. Always cut off any wires that are not in use as closely as possible to the cable gland.

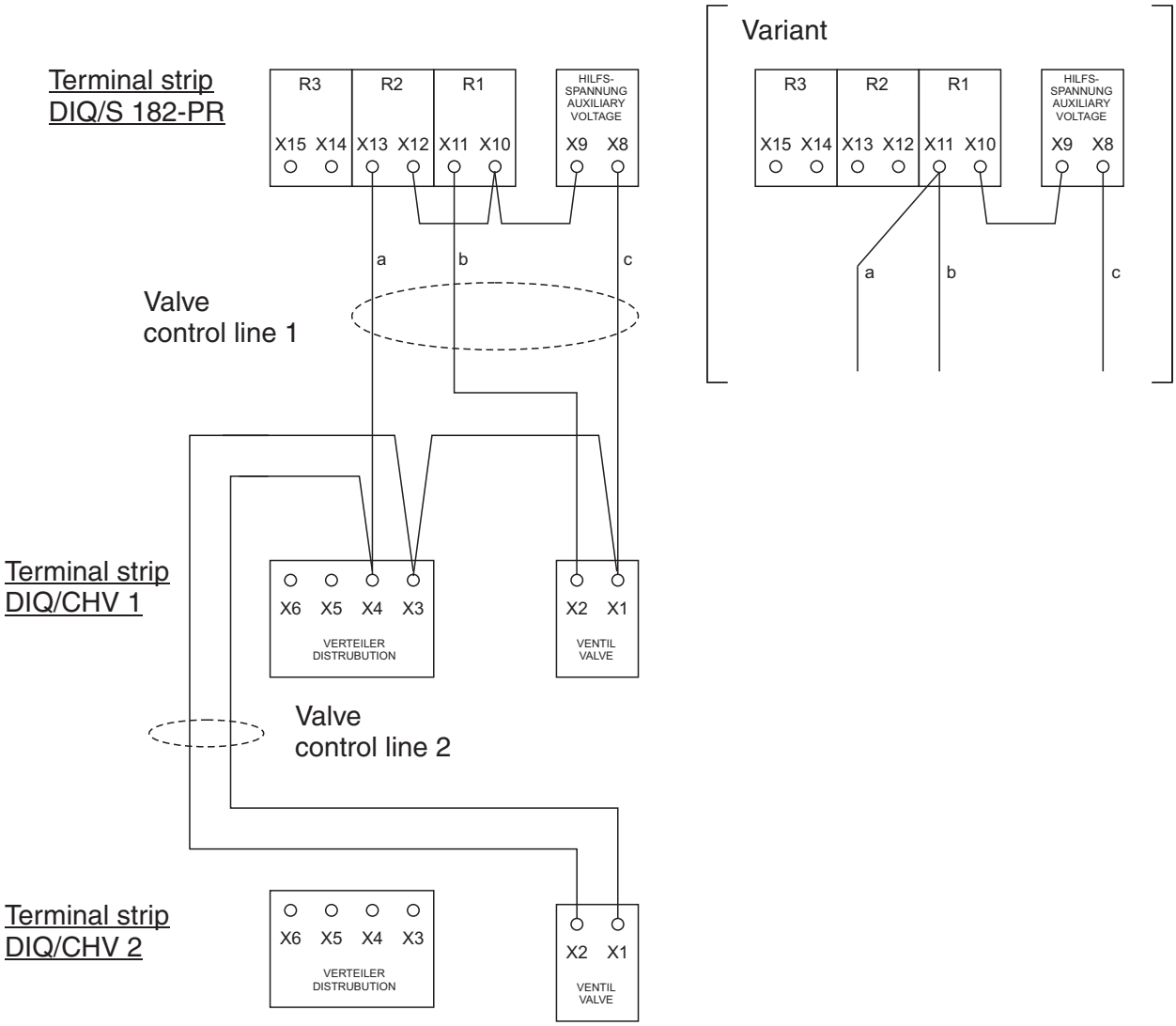
Terminal strip
DIQ/S 182-PR
R3
R2
R1
HILFS-
SPANNUNG
AUXILIARY
VOLTAGE
X15 X14 X13 X12 X11 X10 X9 X8
a
b
c
Valve
control line 1
Variant
Terminal strip
DIQ/CHV 1
X6 X5 X4 X3
VERTEILER
DISTRUBUTION
X2 X1
VENTIL
VALVE
Valve
control line 2
Terminal strip
DIQ/CHV 2

3.13 Figures of the terminal strips

DIQ/S 182-PR

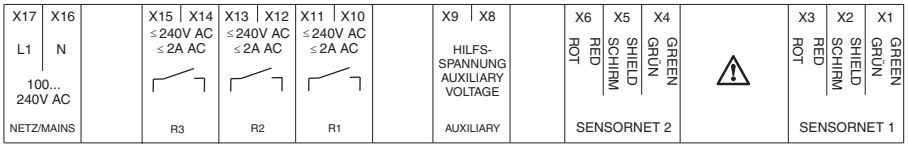

DIQ/S 182-PR/24V

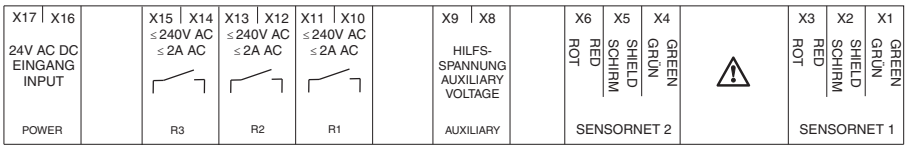

DIQ/JB

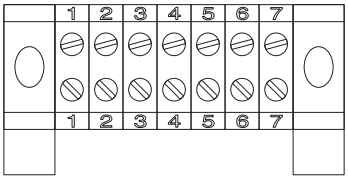

(7 passive, potential-free terminals for line extension or branching)

DIQ/CHV



4 Operation

4.1 Operating elements

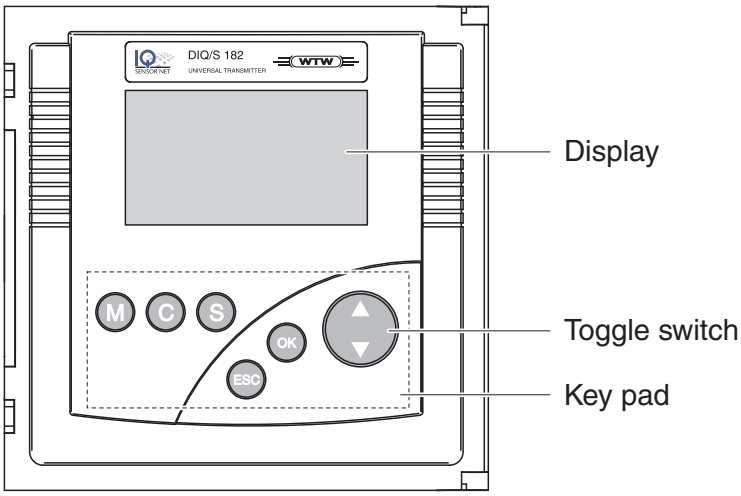

Fig. 4-1 Operating elements of the DIQ/S 182-PR

Functions

Key	Function
Ⓜ	Switches directly to the measured value display from all operating situations
Ⓒ	Starts calibration of the sensor selected in the measured value display
Ⓢ	Opens the *SETTINGS* menu in the measured value and status display
ESC	● Switches to the higher menu level ● Cancels entries without storing them
OK	● Opens the *PROPERTIES* menu in the measured value and status display ● Confirms an entry
▲▼ (toggle switch)	● Selects: – The active sensor (measured value display) – Menu items – List entries – Letters or numerals ● Scrolls through longer menus or texts

4.2 Measured value and status display

With the Ⓜ key you switch to the last selected measured value and status display from any operating situation. Entries that are not completed are ignored while doing so.

By pressing Ⓜ once again you cyclically switch between further display options.

Example: Display options with two connected sensors

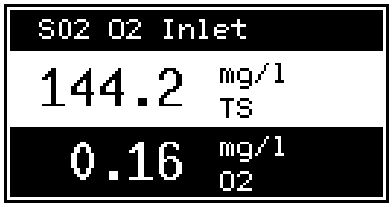

Big double display:
Main measured parameter only.

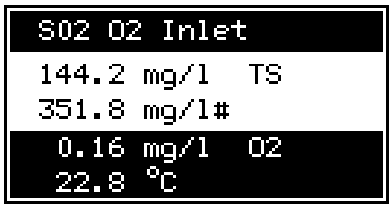

Detailed double display:
Main and secondary measured parameter.

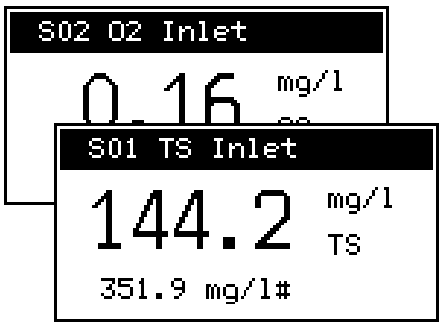

Single display.
The display switches between the connected sensors every 3 seconds.

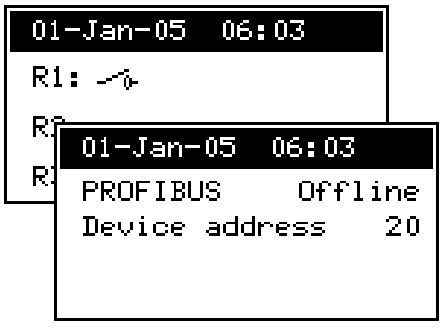

Display of the interfaces.
Either:
Date and time and the current states of the relays.
Or (switchable with ⇕):
State of the PROFIBUS communication.

Operating notes

- Select a sensor in the double display with ⇕. The selected sensor is displayed in reverse video. The number and name of the selected sensor are displayed in the header. In the single display, the sensor being displayed is always the selected sensor at the same time.
- Start a calibration procedure for the selected sensor with Ⓒ. Starting a calibration procedure from the display of interfaces is not possible.

- Select the *PROPERTIES* menu with (OK). With this menu you can put sensors in the maintenance condition and prompt important data (calibration data, error messages, operating states, software versions, etc.).
- Open the *SETTINGS* menu with (S).

Special sensor conditions

The following displays inform you of special states of sensors

Init	Sensor is being initialized ● during commissioning or ● if a new IQ sensor is recognized that is not yet giving measured values
----	Sensor inactive or inadmissible operating conditions
Cal	Sensor is being calibrated
Clean	Cleaning procedure active
Error	No communication with the sensor due to defective connection
OFL	Measuring range undercut or exceeded (overflow)
Display flashes	Sensor in maintenance condition

Error and info symbol

If the info symbol ⓘ or error symbol ⚠ appears in the header, error messages from the sensors or error conditions of the system have occurred. Error messages from the sensors are entered in the log book. The log book is described in detail in section 4.4.3. Error conditions of the system can e.g. be an insufficient operational voltage or malfunctions of the communication and are displayed in the *PROPERTIES / SYSTEM STATUS* menu (see section 4.4.1).

4.3 Working with the *SETTINGS* menu

All settings in the *SETTINGS* menu can be protected by a password against unauthorized changing. For more detailed information on password protection, see section 4.6.

4.3.1 Selection menus

Pressing Ⓢ switches from the measured value display to the *SETTINGS* menu (main menu).

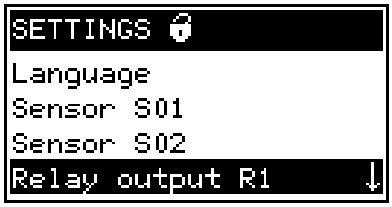

Fig. 4-2 SETTINGS menu (main menu)

Operating notes

- In the main menu, the lock symbol shows the current safety level for the settings
  - Settings not protected by password
  - Settings protected by password (reading possible only)

  For more detailed information on password protection, see section 4.6.
- The arrows ↑/↓ appear automatically if further display contents are above or below the visible display range.
- With the toggle switch Ⓣ you highlight a menu item (displayed in reverse video) and move the visible display range up or down.
- To open a menu item, highlight it and press Ⓞ. The display switches to a further submenu or to a setting table.
- To return to the measured value display, press Ⓜ or Ⓔ.

4.3.2 Setting tables

In the setting tables, you make the actual settings. Two lines together represent each setting. The name of the setting is in the upper line on the left side of the display. The corresponding value is in the line below on the right side.

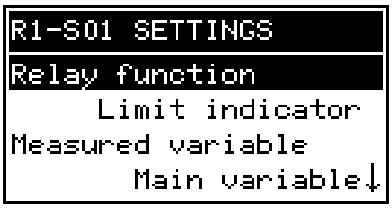

Fig. 4-3 Example of a setting table

Operating notes

- The arrows ↑/↓ appear if further display settings are above or below the visible display range.
- With the toggle switch ⇕ you highlight a setting (displayed in reverse video) and move the visible display range up or down.
- To edit a setting highlight it and press OK. The line below is highlighted and switches to the entry mode. Depending on the operating situation, a new submenu or a table with further relevant settings can open up.
- Break off an action and change to the next higher level with the ESC key.
- Move directly to the measured value display with M.

To accept all settings, you have to highlight the *Save and quit* menu item at the lower end of the setting table and press OK. If you exit the setting table via M, ESC/*Beenden* or the *Beenden* menu item, all changes are ignored.

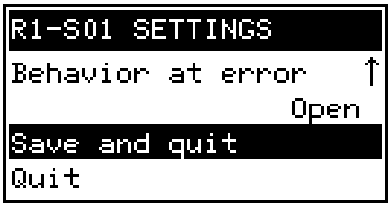

figure 4-4 Save and quit

4.3.3 Entry mode

In the entry mode, you can change individual values or enter a character string. Depending on the value type, change a value as follows

- **Fixed values of a selection list** (e.g. sensor measuring ranges): This is the most frequent form of an entry. Select the required option with the toggle switch ⇕ and confirm the selection with OK. The display switches back to the setting table.

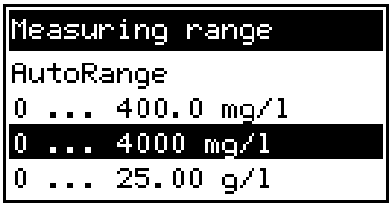

figure 4-5 Example of a selection list

- **Character strings** (text and numerals):

  The following letters, numerals and special characters can be entered: **AaBb..Zz0..9µ%&/()+-=><!?_ °**.

  Entries are made character after character. Select the first character with the toggle switch ⇕ and press OK. The entry mark moves to the next position and indicates ↵. Select the next character with the toggle switch ⇕. When you have selected the required sequence of characters select ↵ as the following character and press OK. The entry is completed with this and the display switches back to the setting table.

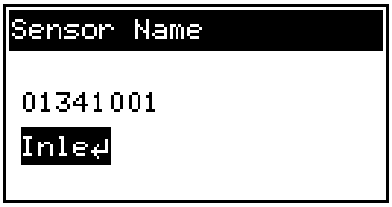

figure 4-6 Example of text entry

If you want to correct a previously selected character while entering, select the thin arrow to the left ← and press (OK). This moves the entry mark by one digit to the left. Thus you can go back to the required character. All characters on its right side, however, have to be entered once again.

If you want to restart entering the characters, select the thick arrow to the left ← and press (OK).

- **Numerals**:
  Entering numerals is made in the same way as entering characters.

  The following numerals can be entered: **`0..9-`**.

  Entering" **`-`**" or "." is only allowed where it makes sense, e.g. "**`-`**" at the first position only.

Save and quit

On principle, all settings done in the entry mode are only taken over after you selected the *Save and quit* item in the relevant setting table and pressed (OK). If you exit the setting table via (M), (ESC) or the *Quit* menu item, all changes are ignored.
Exceptions: Date/time, air pressure and password.

4.4 *PROPERTIES* menu

4.4.1 Overview

Pressing (OK) switches from the measured value display to the *PROPERTIES* menu.

In the *PROPERTIES* menu, you can prompt calibration data and various information on system components. Moreover, you can switch on and off the maintenance condition of a sensor.

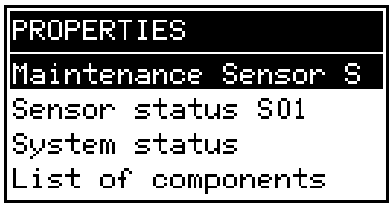

Fig. 4-7 PROPERTIES menu

Submenus/functions

- *Maintenance Sensor* **Sxx** With this function, you switch on and off the maintenance condition of a sensor (see section 4.4.2)
- *Sensor status* ***Sxx***
  Here you can prompt the following data of a sensor (see section 4.4.3):
  - Type, series number and software version
  - Data of the last calibration
  - Error and info messages
- *System status*
  Here you can prompt the following data of the system:
  - Series number and software version of the Universal Transmitter
  - Status of the operational voltage (☺ = OK / ☹ = faulty)
  - Status of communication (☺ = OK / ☹ = faulty)
  - Current states of interfaces

  If the operational voltage or communication are faulty, the flashing error symbol ⚠ appears in the header of the measured value display. The error symbol ⚠ automatically disappears when the malfunction has been eliminated.
- *List of components*
  Here is a list of all connected sensors.

4.4.2 Maintenance condition

When an IQ sensor is calibrated, cleaned, serviced or repaired, the maintenance condition for the relevant IQ sensor should always be switched on.

In the maintenance condition

- apart from the measured value display, the system does not react to the current measured value or the condition of the selected IQ sensor
- IQ sensor errors do not prompt changes in the conditions of linked outputs.

The following diagram gives you an overview of when an IQ sensor is in the maintenance condition.

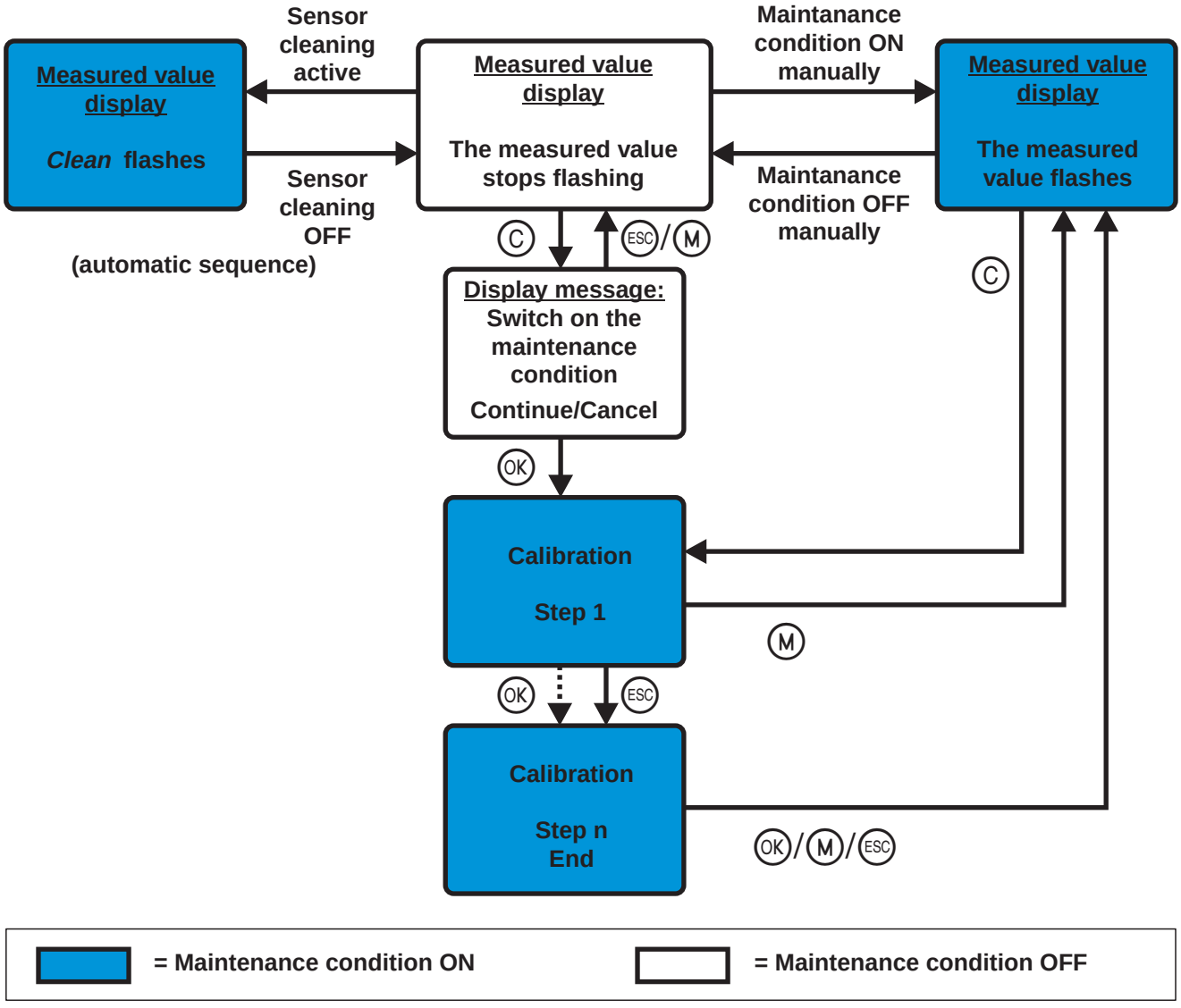

Recommended proceeding for cleaning, maintenance and repair

1	Switch on the maintenance condition for the IQ sensor. The measured value display flashes.
2	Pull the sensor out of the sample.
3	Carry out the cleaning, maintenance or repair (removal and replacement) of the sensor.
4	Submerse the sensor in the sample again.
5	Wait until the measured value does no longer change.
6	Switch off the maintenance condition for the sensor. The display of the sensor in the measured value display does no longer flash.

Automatic switch-on of the maintenance condition

The maintenance condition for IQ sensors is automatically activated

- during calibration. After calibration the IQ sensor remains in the maintenance condition until the maintenance condition is switched off manually (see section 4.5)
- during a compressed-air cleaning cycle. After the cleaning cycle is finished the maintenance condition is automatically switched off again.

4.4.3 *Sensor status* Sxx

In the *SENSOR STATUS Sxx* menu you can prompt the following information on a sensor:

- Type and series number
- Software status
- Error and info messages ("log book")
- Data of the last calibration (only for sensors that can be calibrated)

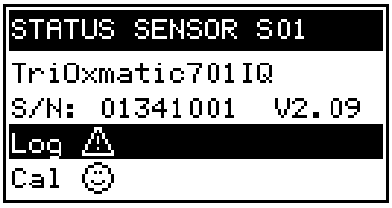

Fig. 4-8 SENSOR STATUS Sxx

Log book

The log book is a list of messages related to a sensor. If there is a new message the info or error symbol in the header of the measured value display flashes:

⚠	Flashes if a new or unacknowledged error message is present in the log book that requires immediate action.
ⓘ	Flashes if a new or unacknowledged informational message is present in the log book.

If there are info and error messages present at the same time, the error symbol ⚠ flashes (more important).

The flashing of the info or error symbol only stops after all detailed message texts in the log book have been opened and marked with a tick (✓). The operating sequence to do this is described on page 4-13.

The error symbol also flashes if the operational voltage or communication in the system are faulty. You can check this in the *PROPERTIES / SYSTEM STATUS* menu (see section 4.4.1).

Calibration data

You can view the data of the last calibration under the *Cal* menu item. Sensors that have not yet been calibrated do not have this menu item. The symbol in the *Cal* line quotes the validity state:

☺ = valid

☹ = invalid

The content and form of the calibration data depend on the sensor type.

Log book messages

Each log book message in the log book consists of one line. The latest message is on the first position. They are not yet marked with a tick, i.e. acknowledged.

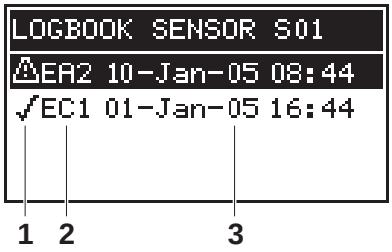

Fig. 4-9 Log book

1	Message type (error or info symbol) of an unacknowledged message, or tick (✓) with an acknowledged message
2	Message code
3	Date and time of the message

The log book shows the current status at the point of time it was opened. If new messages arrive while the log book is open, these do not appear in the log book. The new messages are only included when you switch to the measured value and status display.

Structure of the message code

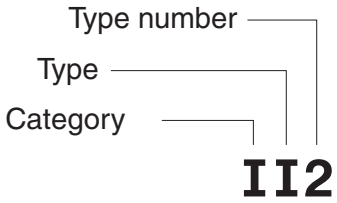

Fig. 4-10 Message code

Pos.	Information	Explanation
1	Category	● Info message (I) ● Error message (E)
2	Type	● Calibration (C) ● Installation and commissioning (I) ● Instructions for service and repair (S) ● Application instructions (A)
3	Type number	Each type contains subtypes (0..9A..Z)

Only the last message of each message code is ever displayed. If a new message arrives with a message code that already exists in the log book, the older message is overwritten.

Detailed message text

You can view the detailed message text when you acknowledge the message. It contains a precise description of the message codes and, if required, instructions for any further actions. The detailed message texts can also be found in the respective sensor operating manual.

Proceeding: Open log book, acknowledge messages and view detailed messages

1	Open the *PROPERTIES* menu. To do so, press OK in the measured value display.

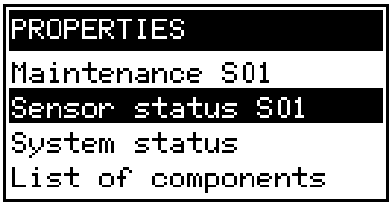

2	Select *Sensor status Sxx* (xx = required sensor) and press OK.

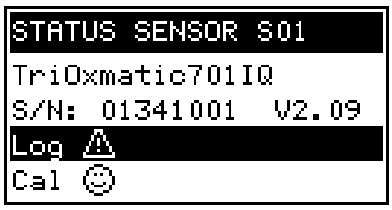

3	Select the *Log...* menu item and press (OK). The log book is displayed.

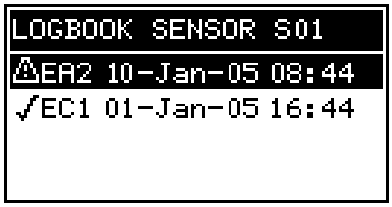

4	Highlight the message to be acknowledged and press (OK). The detailed message text is displayed. Scroll through the text with the toggle switch (▲▼).

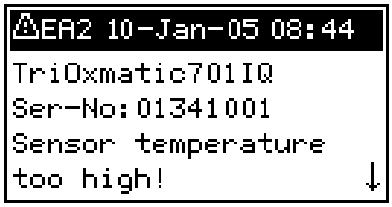

5	Press (OK). Thus you acknowledge the message (✓).

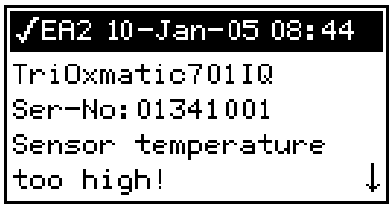

6	Press (OK) once again. With this you return to the log book and can view and acknowledge further messages as necessary.
7	To exit the log book press (ESC). Return directly to the measured value and status display with (M).

4.5 Calibration of sensors

Sensors can be protected by a password against unauthorized calibration. For more detailed information on password protection, see section 4.6.

General proceeding

1	Switch to the measured value display with (M).
2	Select the sensor to be calibrated with (▲▼) (in the single display, the sensor being displayed is always selected at the same time).
3	Call up calibration with (C). The message, *During the calibration procedure, the linked outputs are frozen,* appears. The maintenance condition is switched on the next time the (OK) key is pressed. Return to the measured value display without switching on the maintenance condition with (M) or (ESC).

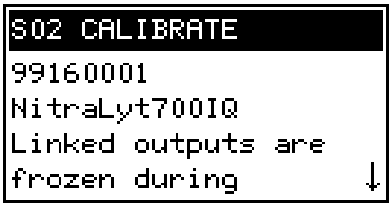

By activating the maintenance condition, linked outputs remain in their present state. The measured value or status display of the sensor flashes in the measured value display.

4	Confirm with (OK). The maintenance condition is active. The following proceeding is sensor type specific. The display guides you through all steps. Exactly follow the instructions. A message of the success of the calibration and the determined calibration data appear at the end.

Up to this point you can cancel the calibration procedure with the (ESC) key at any time. The system continues to work with the old calibration data. The maintenance condition, however, has to be switched off again in any case.

5	Confirm the calibration data with (OK). Calibration is completed with this. The following display message describes the further steps to put the sensor into operation again.



Putting the sensor into operation after calibrating

6	Confirm with (OK). The display returns to the measured value display (the measured value flashes as the sensor is still in the maintenance condition).
7	If calibration was successful, immerse the sensor in the test sample.
8	Wait for a stable measured value.
9	Switch off the maintenance condition (highlight sensor and press (OK) three times). The measured value has stopped flashing.

If calibration was not successful, this is indicated by "----" on the display and a corresponding message with remedial actions appears in the log book. Follow the instructions and repeat calibration.

4.6 Passwords

You can assign and activate two passwords for the System 182.

- **Settings password**
  protects all settings in the *SETTINGS* menu.
  If the password is active, all settings can be viewed but not changed. The password query appears on leaving a setting table with the *Save and quit* command. Resetting the system configuration to default is also protected.

- **Calibration password**
  protects against unauthorized calibration.
  If this password is active, the password query appears on calling up calibration with Ⓒ. If no valid password is entered, calibration is blocked.

Configuring passwords

Activating/deactivating and changing passwords is done in the *SETTINGS -> System* menu.

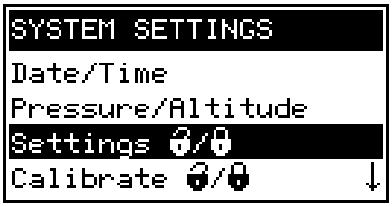

Fig. 4-11 SYSTEM SETTINGS menu

Operating notes

- The settings password is configured with the *Settings* 🔓 / 🔒 menu item.
- The calibration password is configured with the *Calibrate* 🔓 / 🔒 menu item.
- Any activating, deactivating or changing action requires the entry of the relevant current password.

5 The *SETTINGS* menu

5.1 Overview of the *SETTINGS* menu

Pressing Ⓢ switches from the measured value display to the *SETTINGS* menu (main menu).

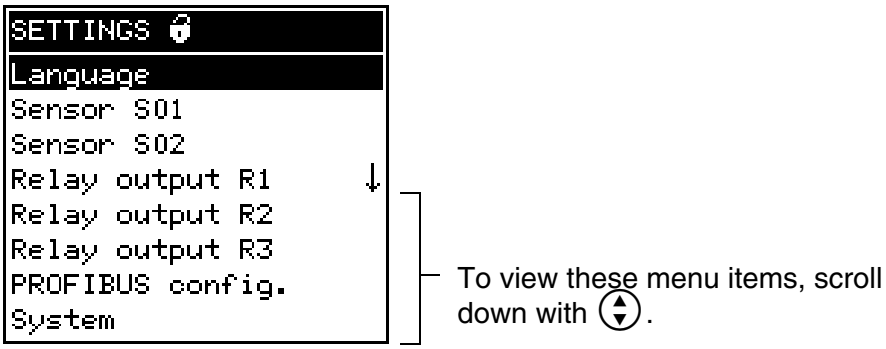

Fig. 5-1 Submenus in the SETTINGS menu

The individual submenus are described in the following paragraphs.

5.2 *Language*

In this menu, you can set the system language.

Proceeding: selecting the language

1	Open the *SETTINGS* menu with Ⓢ.
2	Select and confirm the *Language* menu item with ▲▼ and OK. The *LANGUAGE* display opens.

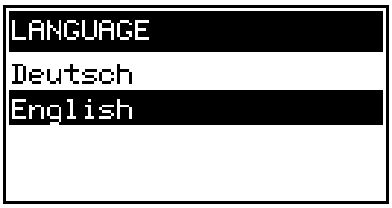

3	Select the required language from the list with ▲▼ and confirm with OK. The selection is taken over immediately. The display switches to the higher menu level.
4	Switch to the measured value display with Ⓜ.

If the selected system language is not available in a sensor, all displays of this sensor appear in the standard language English. To activate the selected system language for this component, a software update of the component is required. Contact WTW.

5.3 Sensor S01/S02

In this menu, you can assign a name of your choice to a sensor and adjust the sensor so it optimally meets the requirements of your application (measured parameter, measuring range, etc.).

All settings are specific for the respective sensor type. They can only be modified if the sensor is connected and communicates with the Universal Transmitter properly. Otherwise, the dataset is inactive. How to deal with inactive datasets is described below.

General steps for editing sensor settings are given below. The *Sensorname* menu item is always on the first position of the setting table. Details of further sensor settings can be found in the chapter, COMMISSIONING of the sensor operating manual.

Proceeding: carrying out settings

5	Open the *SETTINGS* menu with (S).
6	Using (▲▼) and (OK), select and confirm the *Sensor S0x* menu item (corresponding to sensor 1 or sensor 2). The following note appears: *If the measuring mode or measuring range is changed, the links of the sensor are erased.*
7	If you want to continue press (OK). The setting table of the sensor is displayed.

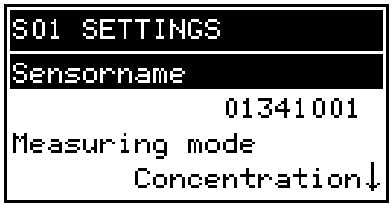

8	Edit the setting table as described in section 4.3.2.

To accept all settings, you have to highlight the *Save and quit* menu item at the lower end of the setting table and press (OK). If you exit the setting table via (M), (ESC)/*Beenden* or the *Beenden* menu item, all changes are ignored.

Inactive sensor datasets

An inactive dataset for an IQ sensor arises if the Universal Transmitter receives no signals from an already registered IQ sensor. The *Error* display appears on the measured value display instead of a measured value.

An inactive dataset can be reactivated by assigning it, e.g. to an IQ sensor of the same type (see section 8.3.2). All settings are retained. If you no longer require these data, you can erase them. All the settings belonging to this IQ sensor as well as any links with outputs are deleted by this action.

Proceeding: deleting inactive datasets

1	Open the *SETTINGS* menu with (S).
2	Using (▲▼) and (OK), select and confirm the *Sensor S0x* menu item (corresponding to sensor 1 or sensor 2). If the dataset is inactive the following display appears:

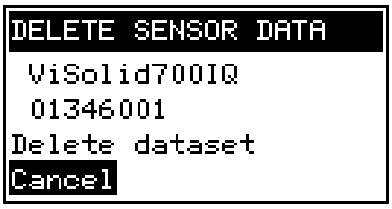

3	Select *Delete dataset* with (↻) and confirm with (OK). The dialog window for the security prompt appears.
4	Select *Delete dataset* with (↻) and confirm with (OK). The inactive sensor is erased.

5.4 Relay output R1/R2/R3

In these menus you can link sensors with the relay outputs of the Universal Transmitter and adjust the outputs. The various setting options are described in detail in the chapter 6 RELAY OUTPUTS menu.

5.5 PROFIBUS config.

You can set the PROFIBUS address in this menu (see operating manual "IQ SENSOR NET Field bus linking").

5.6 System

The settings in the *SYSTEM* menu comprise:

- *Date/Time*
- *Pressure/Altitude*
  This setting is important if you want to carry out D. O. measurements with the System 182.
  (adjustable range: 500 ... 1100 mbar or 0 ... 5955 m altitude).
- *Settings* 🔓 / 🔒
  Here you can configure the password for the settings.
  For details on the passwords refer to section 4.6.
- *Calibrate* 🔓 / 🔒
  Here you can configure the password for calibration.
  For details on the passwords refer to section 4.6.
- *Display contrast*
  Here you can set the display contrast for optimum readability.
- *Delivery state*
  Here you can reset all settings to default. Only the date, time and contrast setting for the display will remain stored. If the settings password is active, a password prompt appears before the reset. In any case a security prompt appears to prevent an inadvertent reset.

Delivery condition

Settings	Default values
Language	English
Pressure/Altitude	1013 mbar / 0 m
Settings password	1000 / inactive
Calibration password	1000 / inactive

Settings	Default values
Sensor settings	Sensor dependent (see settings tables in the respective sensor operating manual). Note: Calibration of the sensor is stored in the sensor and is retained when the system configuration is reset.
Relay outputs	no function, all links are erased
PROFIBUS address	20

6 Relay outputs

6.1 General information

The DIQ/S 182-PR Universal Transmitter has three relay outputs and one PROFIBUS output.

Functions for relay outputs

- *System monitoring*
- *Sensor monitoring*
- *Limit indicator*
- *Frequency output*
- *Pulse-width output*
- *Sensor controlled*
- *Cleaning*
- *Manual control*

Relay outputs can be configured as opener or closer.



You can view the current states of the relay outputs in the measured value and status display (see section 4.2).

6.2 Linking and adjusting: general proceedings

6.2.1 Linking relay outputs

Linking options

You have the following options of linking relay outputs:

- *Sensor S01*
  The output is linked with sensor 01
- *Sensor S01*
  The output is linked with sensor 02
- *Sensor S01&S02*
  The output is linked to both sensors S01 and S02.
- *System*
  Select this option if you want to use the output for system monitoring (details, see section 6.4.2).

Proceeding: linking outputs

Proceed as follows if the output was not yet linked. If you want to change a link you have to erase the existing link first.

1	Open the *SETTINGS* menu with (S).
2	Using (▲▼) and (OK), select and confirm the *Relay output* Rx menu item (corresponding to sensor 1, 2 or 3). A list with all linking options is displayed.

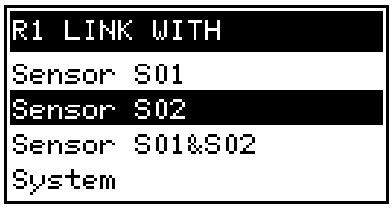

3	Select the required option with (▲▼) and confirm with (OK). The output is linked. The link is displayed in the header when the setting of the output is edited.

6.2.2 Deleting a link with an output

If you no longer need a link you can erase the link.

Proceeding: erasing a link

1	Open the *SETTINGS* menu with (S).
2	Using (▲▼) and (OK), select and confirm the *Relay output* Rx menu item (corresponding to sensor 1, 2 or 3).

```
R1-S02
Delete link
Set output
     Limit indicator
```

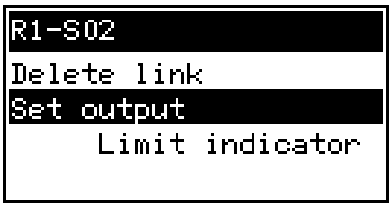

3	Using (▲▼), select *Delete link* and confirm with (OK). A security prompt appears.
4	Using (▲▼), select *Delete link* and confirm with (OK). The link is deleted.

6.2.3 Setting outputs

Proceeding: setting an output

1	Open the *SETTINGS* menu with Ⓢ.
2	Using ▲▼ and OK, select and confirm the *Relay output* Rx menu item (corresponding to sensor 1, 2 or 3).

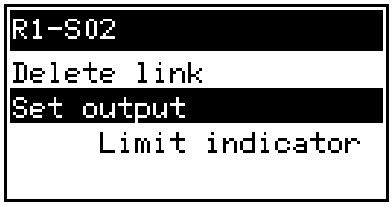

3	Confirm the selection *Set output* with OK. The setting table of the output is displayed.

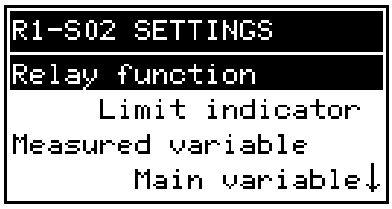

4	Edit the setting table as described in section 4.3.2.

To accept all settings, you have to highlight the *Save and quit* menu item at the lower end of the setting table and press OK. If you exit the setting table via Ⓜ, ESC/*Quit* or the *Quit* menu item, all changes are ignored.

6.3 Basic information on relay functions

In this chapter, you will find general basic information concerning the following relay functions:

- Event monitoring (see section 6.3.1)
- Limit indicator (see section 6.3.2)
- Proportional output (see section 6.3.3)

6.3.1 Event monitoring

When using a relay for event monitoring, a relay action (*Open*, *Close*) occurs when the monitored event takes place.

This function is suitable, e.g. for the monitoring of errors in the system. If an event takes place, the relay works as an alarm contact.



For monitoring functions, use the relay preferably as an opener. In the case of an error, the relay opens. As a result, the monitoring function operates even if, e.g. the supply voltage fails.

6.3.2 Limit indicator

With a limit indicator, a relay switches when a specified limiting value is exceeded or undercut.

Limit indicators can be used in the following way:

- Monitoring a limiting value using a relay:
  when a limiting value (upper or lower limiting value) is exceeded or undercut, a relay switches. The *Open* or *Close* relay actions are possible in each case (see page 6-6).
- Monitoring two limiting values using two relays:
  If the upper limiting value is exceeded or undercut, a relay switches, and if the lower limiting value is exceeded or undercut, another relay switches. The *Open* or *Close* relay actions are possible in each case (see page 6-6).



If the simple monitoring function (*Open*, *Close*) with one or two relays is not sufficient, use proportional output (see section 6.3.3).

Monitoring limiting values using one or two relays

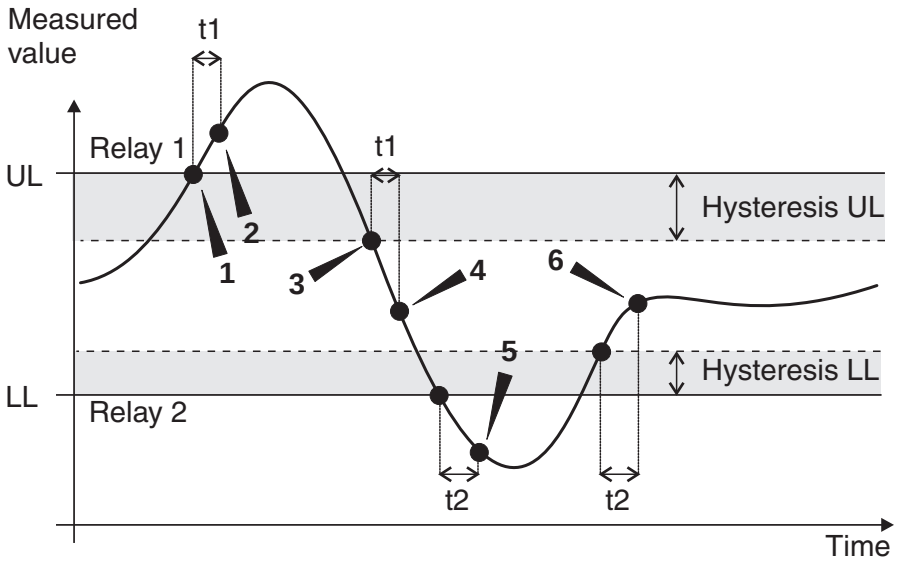

Fig. 6-1 Switching points for relays with the function of a limit indicator

1	Upper limit value (relay 1) exceeded
2	Selected switching delay t1 for relay 1 expired Relay 1 switches
3	Hysteresis for upper limiting value (relay 1) undercut
4	Selected switching delay t1 for relay 1 expired Relay 1 switches back
5	Lower limit value (relay 2) undercut Selected switching delay t2 for relay 2 expired Relay 2 switches
6	Hysteresis for lower limiting value (relay 2) exceeded Selected switching delay t2 for relay 2 expired Relay 2 switches back

A switching delay (t) can be set up for each relay for switching processes. This is the time period for which a limiting value must be exceeded before the relay switches. This prevents frequent switching if the measured values are close to the limiting value.

6.3.3 Proportional output

In the case of proportional output, a relay switches cyclically on and off in a defined measured value range (proportional range). At the same time, the relay switches with a:

- duration of operation that corresponds to the measured value (pulse-width output, see page 6-9) or
- switching frequency (frequency output, see page 6-10).

Proportional outputs can be used in the following way:

- Output with one relay:
  An output range is defined with a *Start value* and an *End value*. No output takes place above and below the output range (see page 6-8).
- Output with two relays:
  An output range is defined for each relay with a *Start value* and an *End value*. One relay outputs in the upper output range and a further relay in the lower output range (see page 6-8).

Output with one relay

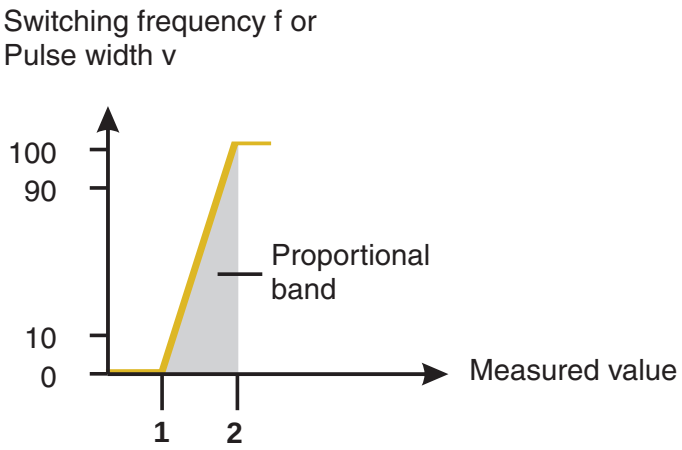

Fig. 6-2 Output with one relay

Output with two relays

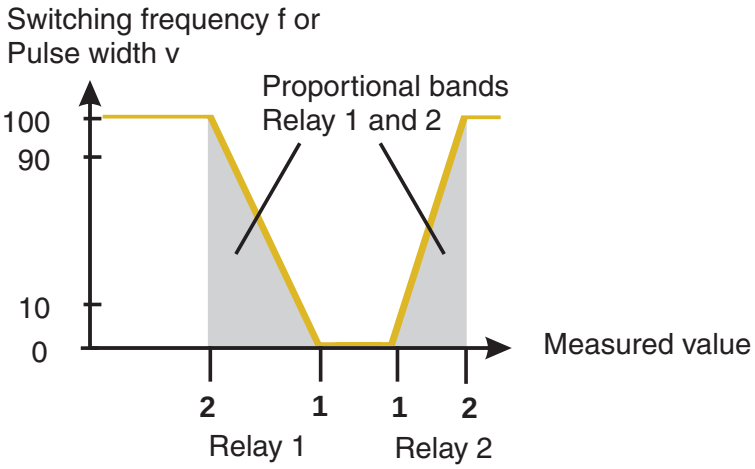

Fig. 6-3 Output with two relays

1	*Start value* Measured value with a minimum pulse width or switching frequency
2	*End value* Measured value with a maximum pulse width or switching frequency

Pulse width output

The output via the pulse width is used, e.g. for controlling valves.

Pulse-width regulation changes the duration of operation (ton) of the output signal. Depending on the position of the measured value in the proportional range, the relay is operated for a longer or shorter period.

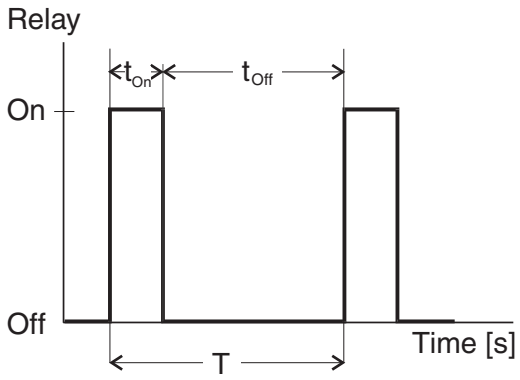

Fig. 6-4 Relay output of the pulse-width output

The cycle duration (T) is made up of the turn-on and turn-off switching duration (t_{on}, t_{off}) of the relay together. While the selected cycle duration (T) remains constant, the turn-on duration (t_{on}) changes depending on the measured value and, with it, the pulse width (v). The pulse width can be set from 0 % to 100 %.

$v = (t_{on} / T) * 100\ \%$

v = pulse width, T = cycle duration, t_{on} = turn-on duration

- If the measured value is at the end of the proportional range (*End value*), the turn-on duration (t_{on}) is long, the turn-off duration is short. This means the relay operates for a longer period.
- If the measured value is at the beginning of the proportional range (*Start value*), the turn-on duration (t_{on}) is short, and the relay operates for a correspondingly shorter period.

If the duration of the closing or opening pulse is shorter than 0.1 s, the relay remains open or closed for the complete cycle duration.

Frequency output

Switching frequency output is used, e.g. for controlling dosing pumps.

In contrast to the pulse-width output, not the pulse width is modulated with frequency output but the switching frequency of the output signal. Depending on the position of the measured value in the proportional range, the relay is switched more often or less often.

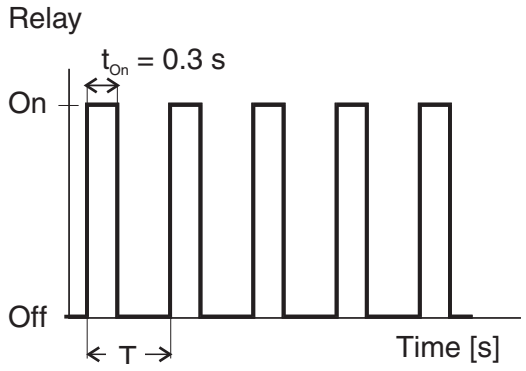

Fig. 6-5 Relay output of frequency output

While the selected switching duration (t_{on} = 0.3 s) always remains constant, the switching frequency at which the relay switches changes depending on the measured value.

- If the measured value is at the end of the proportional range (*End value*), the switching frequency is higher.
- If the measured value is at the beginning of the proportional range (*Start value*), the switching frequency is low.

Characteristic curves

Through the selection of the *Start value* and *End value*, the proportional output can be operated with a positive or negative characteristic curve.

- Positive characteristic curve:
  Select the
  End value to be greater than the *Start value*.
  The turn-on duration or frequency increases with an increasing measured value (see page 6-12).
- Negative characteristic curve:
  Select the
  End value to be smaller than the *Start value*.
  The turn-on duration or frequency decreases with an increasing measured value (see page 6-13).

The maximum values for the pulse width or switching frequency are assigned to the *End value* value and the minimum values for turn-on duration or frequency are assigned to the *Start value* value.

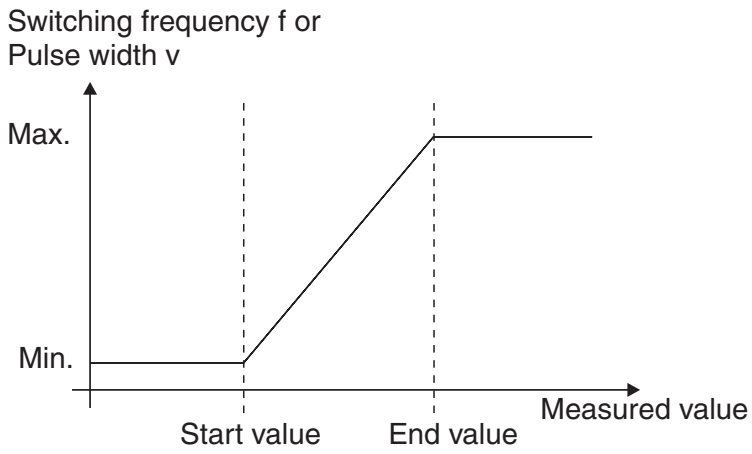

Fig. 6-6 Positive characteristic curve

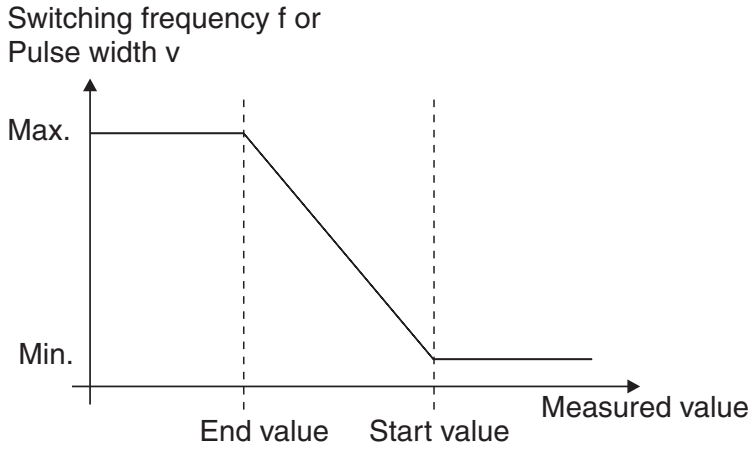

Fig. 6-7 Negative characteristic curve

Positive characteristic curve

The proportional output range begins above the initial value. If the proportional range is undercut or exceeded, the selected behavior comes into force.

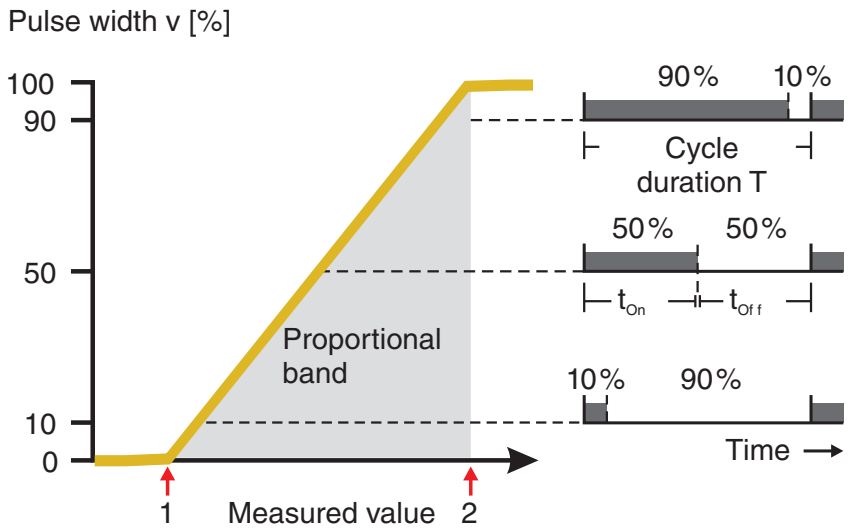

Fig. 6-8 Pulse width output

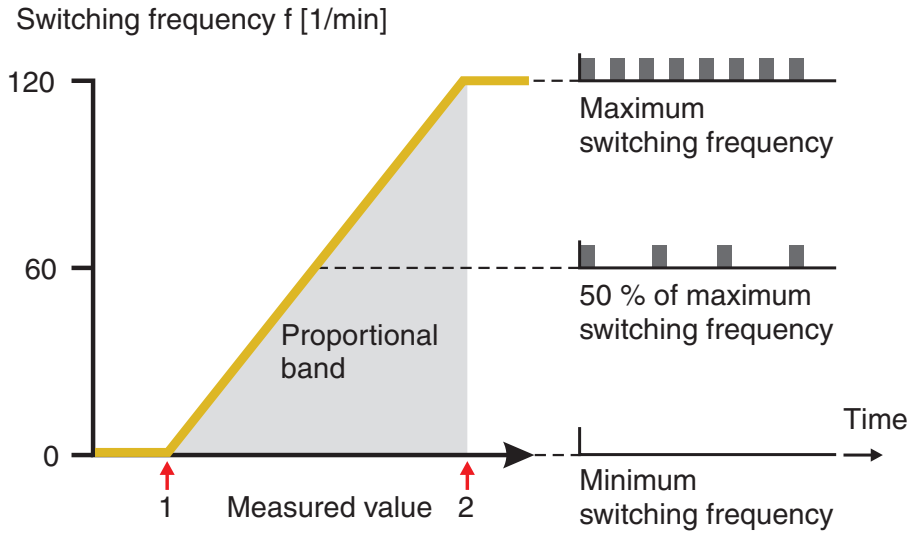

Fig. 6-9 Frequency output

1	*Start value* Measured value with a minimum pulse width or switching frequency
2	*End value* Measured value with a maximum pulse width or switching frequency

Negative characteristic curve

The proportional output range begins below the initial value. If the proportional range is undercut or exceeded, the selected behavior comes into force.

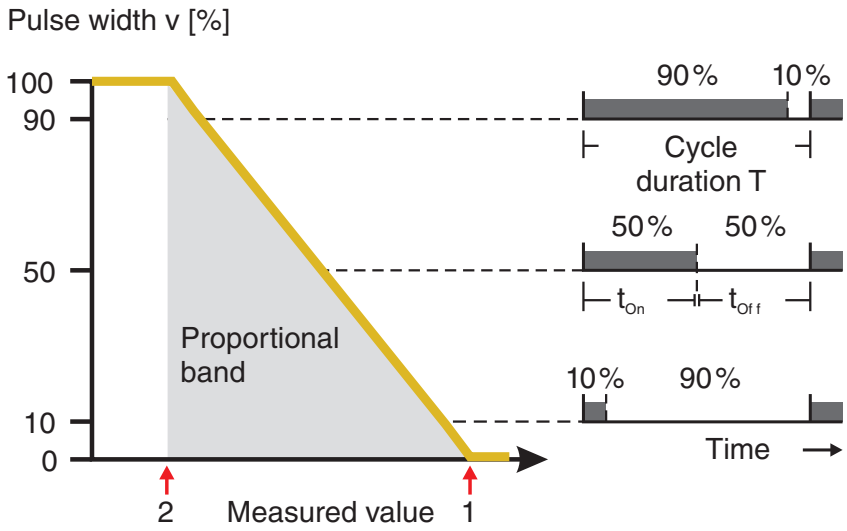

Fig. 6-10 Pulse width output

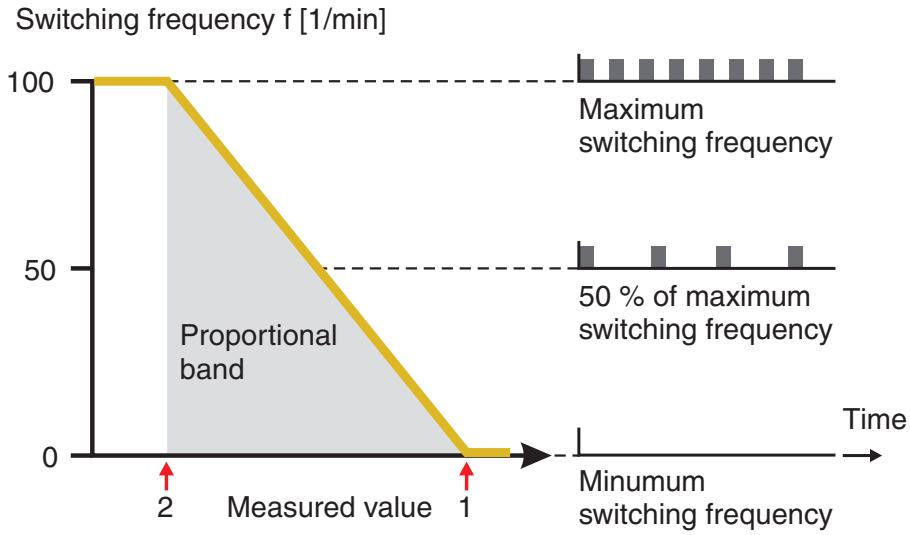

Fig. 6-11 Frequency output

1	*Start value* Measured value with a minimum pulse width or switching frequency
2	*End value* Measured value with a maximum pulse width or switching frequency

6.4 Setting table for relays

6.4.1 Functions and settings

To set a relay its function has to be selected first. Then the relevant setting table is displayed:

Relay function and relevant setting tables

Function	Setting table
No function	The relay output is not used.
System monitoring	see section 6.4.2
Sensor monitoring	see section 6.4.3
Limit indicator	see section 6.4.4
Frequency output	see section 6.4.5
Pulse-width output	see section 6.4.6
Sensor controlled	see section 6.4.7
Cleaning	see section 6.4.8
Manual control	see section 6.4.9

6.4.2 *System monitoring*

Function

The *System monitoring* enables monitoring system errors.

To set up the *System monitoring* function for a relay output you have to select the *System* option when linking the relay output (see section 6.2.1).

It can be used to monitor the following system errors:

Settings

Settings	Selection	Explanations
Power failure	*On* *Off*	The *Power failure On* function monitors the supply voltage in the DIQ/S 182-PR. If the voltage falls below a critical value, the relay switches.
Collective error	*On* *Off*	The *Collective error* function simultaneously monitors the proper function of all sensors. (for details see below this table)
Action	*Open*	For all functions of the *System monitoring*, the relay action is set to *Open*.

Collective error message

In the case of a *Collective error* message, the relay opens if one of the following malfunctions occurs:

- One of the sensors properly registered at the controller does not supply a valid main measured value
- One of the sensors properly registered at the controller does not supply a valid secondary measured value

In any case, the relay remains open for 10 seconds and only closes when the malfunction is no longer present.

In the following cases, the relay does not open despite an invalid measured value:

- The sensor is being calibrated
- The sensor is in the maintenance condition
- The sensor is being cleaned with the aid of a valve module in the system (compressed air operated cleaning system).

6.4.3 *Sensor monitoring*

Function

The *Sensor monitoring* function enables to monitor sensor errors and the maintenance condition.

In order to set up the *Sensor monitoring* function for a relay output, the relay output must be linked with a sensor (see section 6.2.1).

Settings

Setting	Selection	Explanation
Errors	*All*	All sensor errors (special ones and general ones) are monitored and can prompt a relay action.
	Special	Special sensor errors are monitored and can prompt a relay action.
	Off	Sensor errors are not monitored.
Mainten. condition	*On* *Off*	Switching on and off the maintenance condition is monitored and can prompt a relay action.
Action	*Open*	For all functions of the *Sensor monitoring*, the relay action is set to *Open*.



Preferably set up the relay output as an opener for monitoring functions.

Sensor messages include errors and information that are registered by the sensor.

Special sensor errors

The special sensor errors are sensor-dependent. Details of this are given in the component operating manual of the respective sensor.

General sensor errors

Init	can prompt a relay action for a short time, depending on the starting behavior of the system
----	Invalid measured value, or defective sensor
Error	Communication with sensor interrupted
OFL	Measuring range undercut or exceeded (overflow)

6.4.4 *Limit indicator*

Function

The characteristic of the limit indicator is laid down in the *Limit value UL*, *Limit value LL*, *Hysteresis UL* and *Hysteresis LL* settings. The fundamentals of the function are described in the introductory chapter (see section 6.3.2).

In order to set up the *Limit indicator* function for a relay output, the relay output must be linked with a sensor (see section 6.2.1).

Settings

Setting	Selection/Values	Explanation
Limit values	*UL main variable* *LL main variable* *UL adjoining var.* *LL adjoining var.*	*Main variable* designates the actual measured parameter of the sensor (e.g. pH, oxygen, etc.). *Adjoining variable* designates an additional measured parameter (e.g. temperature).
Limit value UL	*within the measuring range (sensor-dependent)*	Any upper or lower limiting value
Limit value LL		
Hysteresis UL	*0 - 10 % of the measuring range*	Hysteresis for upper or lower limiting value
Hysteresis LL		
Behavior at error	*Open* *Close* *Unchanged*	The relay opens, closes, or remains unchanged in case of system errors or sensor errors (see page 6-25).
Action	*Open* *Close*	Relay action
Switching delay	*0 ... 3600 s*	The time period for which a limiting value must be exceeded before the relay operates. Prevents frequent switching for measured values that are close to the limiting value.

6.4.5 *Frequency output*

Function

The characteristic of the frequency output is laid down in the *Start value*, *End value*, *Frequency (f) min.* and *Frequency (f) max.* settings. The fundamentals of the function are described in the introductory chapter (see section 6.3.3).

In order to set up the *Frequency output* function for a relay output, the relay output must be linked with a sensor (see section 6.2.1).

Settings

Setting	Selection/Values	Explanation
Measured variable	*Main variable* *Adjoining variable*	*Main variable* designates the actual measured parameter of the sensor (e.g. pH, oxygen, etc.). *Adjoining variable* designates an additional measured parameter (e.g. temperature).
Start value	*within the measuring range (sensor-dependent)*	Minimum spacing: 5 % of the measuring range
End value		
Frequency (f) min.	*0 to 120 1/min*	Minimum spacing: 10 1/min
Frequency (f) max.		
Frequency with error	*0 to 120 1/min*	In case of system errors or sensor errors (see page 6-25), the relay switches with the frequency specified.
Action	*Open* *Close*	Relay action

Characteristic curve

If a value is entered for *End value* that is greater than the *Start value*, the output has a positive characteristic curve.

In order to obtain a negative characteristic curve, a value must be entered for *End value* that is smaller than the value for *Start value*.

6.4.6 *Pulse-width output*

Function

The characteristic of the pulse width output is laid down in the *Start value*, *End value*, *Pulse width (v) min.* and *Pulse width (v) max.* settings. The fundamentals of the function are described in the introductory chapter (see section 6.3.3).

In order to set up the *Pulse-width output* function for a relay output, the relay output must be linked with a sensor (see section 6.2.1).

Settings

Setting	Selection/Values	Explanation
Measured variable	*Main variable* *Adjoining variable*	*Main variable* designates the actual measured parameter of the sensor (e.g. pH, oxygen, etc.). *Adjoining variable* designates an additional measured parameter (e.g. temperature).
Start value	*within the measuring range (sensor-dependent)*	Minimum spacing: 5 % of the measuring range
End value		
Pulse width (v) min.	*0 ... 100 %*	Minimum spacing: 10 % of the *Cycle duration (T)*
Pulse width (v) max.		
Cycle duration (T)	*5 ... 100 s*	Length of the switching period T $T = (t_{on} + t_{off})$
Error pulse width	*0 ... 100 %*	In case of system errors or sensor errors (see page 6-25), the relay switches with the pulse-width specified.
Action	*Open* *Close*	Relay action

Characteristic curve

You can specify the minimum and maximum pulse width (v). This determines the steepness of the characteristic curve of the output.

6.4.7 Sensor-controlled cleaning

With the *Sensor controlled* function, the relay is controlled by a linked sensor.

Requirements

- Controller version from 2.80
- Sensor that transmits signals to trigger a cleaning cycle, e.g. UV/VIS sensor

Settings

Setting	Selection/Values	Explanation
Pulse length	*Automatic*	The duration of the air cleaning process is programmed in the sensor. The relay automatically takes over the cleaning duration from the sensor.
	0,5 s *1 s* *2 s* *3 s*	The relay finishes the cleaning after the selected interval.



Settings of the cleaning process can be done in the *SETTINGS* menu of the respective sensor.

6.4.8 *Cleaning*

Function

The *Cleaning* function enables the time controlled automatic start of the sensor cleaning function with the aid of a relay of the Universal Transmitter. The relay controls the DIQ/CHV valve module and switches on or off the compressed air for the CH sensor cleaning head.

In order to set up the *Cleaning* function for a relay output, the relay output must be linked with a sensor (see section 6.2.1).

The assigned relay always works as a closer.

The cleaning cycle consists of *Cleaning duration* and *Adjustment time*.

During the cleaning cycle the *Clean* display flashes. The outputs linked with this sensor are frozen. The maintenance condition is active.

After the *Cleaning duration*, the relay is opened. During the following *Adjustment time* the outputs remain blocked.
The outputs linked with this sensor are only released when the cleaning cycle is completed. The *Clean* display disappears. The maintenance condition is finished.

Testing the operativeness

You can test the operativeness of the cleaning system as follows: manually open or close the relay with the *Manual control* function (see section 6.4.9) and, while doing so, check the behavior of the cleaning system.

Alternatively, you can test the operativeness of the cleaning system by checking the performance of the function at the start time set up (reference time ± interval). To perform a test immediately, you can set the reference time so that the next cleaning cycle will start in a few minutes (settings: see following table).

Settings

Setting	Selection/Values	Explanation
Reference time (h)	*0 ... 23 h*	Time at which a cleaning cycle is started. Further cleaning cycles will be performed at the times specified by the cleaning interval.
Reference time (min)	*0 ... 60 min*	
Interval unit	*1 .. 7 d* *1 .. 24 h* *5 .. 60 min*	Selection of range and unit for the *Cleaning interval*.
Cleaning interval	*1/2/3/4/5/6/7 d* *or:* *1/2/3/4/6/8/12/24 h* *or:* *5/10/15/20/30/60 min*	Repeat interval for the cleaning function: Time between the start time of a cleaning cycle and the start time of the next cleaning cycle*.
Cleaning duration	*0 ... 300 s*	Duration of the cleaning
Adjustment time	*0 ... 900 s*	Time extension to allow the sensor to adjust to the test sample after cleaning.

* With short *cleaning intervals*, the adjustable values for the *Cleaning duration* and *Adjustment time* are limited. The following values apply:

Cleaning interval	***Cleaning duration***	***Adjustment time***
≤ 10 min	max. 60 s	max. 120 s
≤ 20 min	max. 180 s	max. 300 s



With this, the cleaning times are fixed. They only change when the *reference time* is changed.



The reference time and all further cleaning times relate to the date and time of the system clock. The setting of the system clock can be found in section 5.6.

Example

Setting		Result
Reference time (h):	12	Reference time: 12:00 hours
Reference time (min):	0	This specifies the following start times:
Interval unit:	*Hours (h)*	04:00, 12:00 and 20:00 hours
Cleaning interval:	8 h	

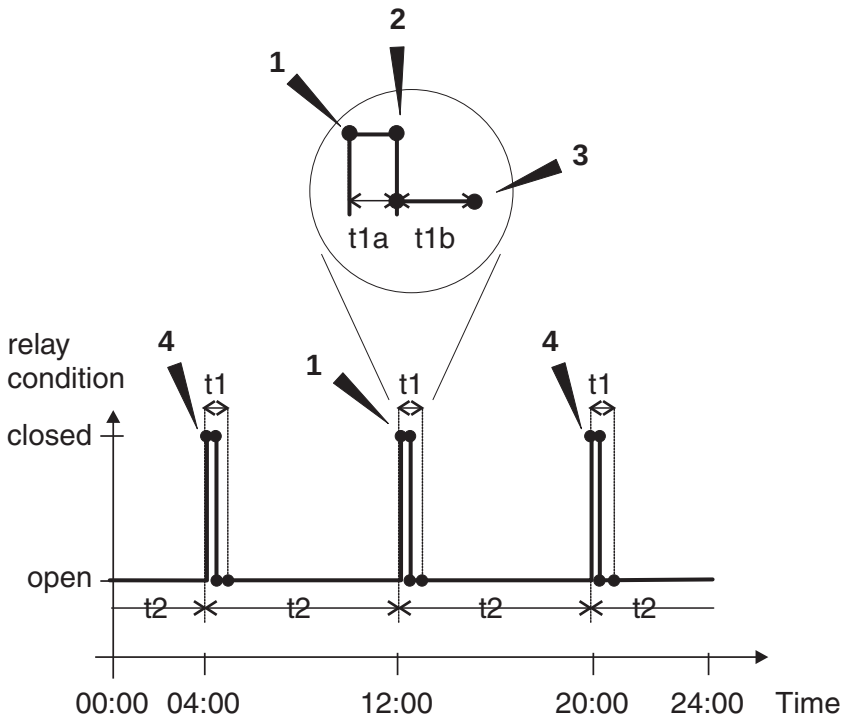

Fig. 6-12 Cleaning cycle

1	Reference time Start of a cleaning cycle (**t1**) Start of the specified *Cleaning duration* (**t1a**)
2	End of the specified *Cleaning duration* (**t1a**) Start of the specified *Adjustment time* (**t1b**)
3	End of the specified *Adjustment time* (**t1b**) End of the cleaning cycle (**t1**)
4	Reference time ± *Cleaning interval* (**t2**) Start of a cleaning cycle
t1	Cleaning cycle = *Cleaning duration* (**t1a**) *Adjustment time* **(t1b**) Linked outputs are frozen.
t2	*Cleaning interval*

Canceling the cleaning

A running cleaning cycle is canceled:

- Automatically
  - If the sensor switches to the inactive condition during the cleaning cycle
- Manually
  - By pressing Ⓒ
  - By switching on the maintenance condition

Each time the cleaning cycle is canceled, the relay opens immediately.

If the cleaning cycle is canceled automatically, the outputs linked to the sensor are released immediately.
If the cleaning cycle is canceled manually, the sensor is in the maintenance condition. The linked outputs are only released after the maintenance condition was terminated manually.

The next cleaning cycle will be performed at the time set up.



In case of a power failure, all relays open. The cleaning cycle is canceled. The outputs linked with the sensor change to the non-active condition (see section 6.5.2). As soon as the power is available, the outputs are released again. The next cleaning cycle will be performed at the time set up.

6.4.9 *Manual control*

Function

With the *Manual control* function, you can test the operativeness of an instrument that is connected to the relay. To do so, close or open the relay manually and, while doing so, check the behavior of the connected instrument.

Setting	Selection/Values	Explanation
Relay function	*Manual control*	The selected relay action is carried out with *Speichern u. Beenden*.
Action	*Open* *Close*	Relay action



The settings for other functions in the *Relay function* menu, as for example *Frequency output* and *Pulse-width output*, are retained while the *Manual control* is carried out.

6.5 Behavior of linked relay outputs

6.5.1 Behavior in case of error

For linked relay outputs, you can specify the behavior in case of errors. Depending on the use of the output, the behavior in case of errors is set in the following menus:

Output	menu
Limit indicator	*Behavior at error* (see section 6.4.4)
Frequency output	*Frequency with error* (see section 6.4.5)
Pulse-width output	*Error pulse width* (see section 6.4.6)

The specified behavior occurs with the following errors.

- The system is in the maintenance condition or displays *Init*, ----, *Cal*, *Clean*, *Error* or *OFL*.
  The meaning of these displays is given in section 4.2 of this operating manual.
- The supply voltage is too low.

6.5.2 Behavior in non-operative condition

An output is non-operative when no function is activated for the output. The relay contact is open in the non-operative condition.

An output becomes non-operative in case of

- Power failure
  (As soon as the supply voltage is sufficient again, the non-operative condition of the outputs ends. The outputs function as specified by the user again.)
- Erasing a link to a sensor
- Changing the *Messmodus* sensor setting for a linked sensor
- Changing the *Messbereich* sensor setting for a linked sensor



Before editing sensor settings a note appears on the display to inform you that links will be erased when you change the *Messmodus* or *Messbereich* sensor setting.

7 Maintenance and cleaning

7.1 Maintenance

Maintenance activities

Component	Maintenance
IQ sensors	Depending on the type of sensor (see the component operating manual of the sensor)
DIQ/S 182-PR, DIQ modules, MIQ modules	No maintenance required

7.2 Cleaning

DIQ/S 182-PR, DIQ modules, MIQ modules

Clean components mounted in the open of gross contamination as necessary. We recommend to clean the worst of the dirt on the enclosure and the area around it each time before opening in order to prevent gross contamination from entering the open enclosure.

To clean the module, wipe the enclosure surfaces with a damp, lint-free cloth. If compressed air is available on site, blow off the worst of the dirt beforehand. Keep the enclosure closed while doing so.

NOTE

Do not use high-pressure water blasters for cleaning (danger of water penetration!). Also do not use aggressive cleaning agents such as alcohol, organic solvents or chemical detergents. These types of cleaning agent can attack the surface of the housing.

IQ sensors

The cleaning of the IQ sensors depends greatly on the respective application. Instructions for this are given in the respective component operating manual.

8 What to do if ...

8.1 Information on errors

Log book

The DIQ/S 182-PR system performs a comprehensive cyclical self test during operation. While doing so, the system identifies all states that deviate from normal operation and enters corresponding messages in the log book (information or error message).

With the aid of the log book, you can call up instructions on how to clear the error directly on the terminal. The log book is described in detail in section 4.4.3 Sensor status Sxx.



Information on possible errors in IQ sensors and MIQ output modules is given in the chapter WHAT TO DO IF ... of the respective component operating manual.

8.2 Error causes and remedies



Errors of the PROFIBUS communication are dealt with in detail in the IQ SENSOR NET Fieldbus linking manual.

The system does no longer react on entries

Cause	Remedy
– System error	Reset the system: – Switch off the power supply and switch it on again after 10 s

"Error" in the measured value display

Cause	Remedy
– Communication with the IQ Sensor interrupted	– Check the cable connection
– Error in the IQ sensor	– Disconnect the IQ sensor and reconnect it after 10 s

The selected system language was not activated for a sensor

Cause	Remedy
– A system language was selected that is not available in the sensor. The English language was activated instead of the selected system language.	– Contact WTW, a software update is required for the respective components

8.3 Replacing system components

8.3.1 Replacing passive components

Passive components include all components that the controller cannot recognize.
These include:

- MIQ power supply modules
- DIQ/JB
- DIQ/CHV
- Cables (SNCIQ, SACIQ).



WARNING
If the DIQ/S 182-PR Universal Transmitter is opened and the MIQ/PS power supply module is operating, there is a danger to life due to possible hazard of electric shock from line voltage. Before opening the Universal Transmitter, switch off the system and, if necessary, all external relay circuits that present a hazard of electric shock and secure the system against being switched on again.

Only ever replace components when the system is switched off. Defective components are removed in the reverse order to the installation (see chapter 3 INSTALLATION).

8.3.2 Adding and replacing IQ sensors

Inactive datasets of IQ sensors

If an IQ sensor is removed from the system, its settings remains stored in the Universal Transmitter as an inactive dataset. A dataset contains the following information:

- Serial number of the IQ sensor (and, with it, the type of sensor)
- Display position
- All sensor settings
- All characteristics of the link with an output.

If no suitable inactive dataset is available, a newly connected IQ sensor is recognized and added automatically.

The DIQ/S 182-PR Universal Transmitter can display and administrate up to two main measured parameters. If necessary, an inactive dataset has to be erased to be able to add a new sensor.

To erase inactive datasets, see page 5-3.

The current calibration data of the IQ sensor is always stored in the sensor. If an IQ sensor is connected that is ready for operation and calibrated, this can be used immediately without the need for recalibration.

If an IQ sensor is connected to the system when an inactive dataset is present, the following cases are possible:

Case 1:

The serial number of the IQ sensor is identical with the serial number of an inactive dataset.	The connected IQ sensor is automatically assigned to the inactive dataset and starts to operate again. Example: Maintenance or repair. This mechanism ensures that all IQ sensors retain their settings and links if an IQ sensor was removed for maintenance, or if the system was temporarily switched off.

Case 2:

The type of sensor is identical with the type of sensor in an inactive dataset (or several inactive datasets), but the serial numbers differ.	Operator intervention is required here. The connected IQ sensor can: – be assigned to the inactive dataset (or one of the inactive datasets). Example: Replacing an IQ sensor. Make sure that the substitute sensor has at least the software status of the inactive IQ sensor. – be included in the list of sensors as a new component (if the maximum number of possible sensors is not yet included). The operating sequence to do this is described below.



It is always possible to replace components and assign a substitute if the software state of the substitute component is as high as or higher than the software version of the original component. Otherwise the component will not be admitted as the replacement component.

Operating sequence in case 2

1	Connect the IQ sensor.
2	Change to the measured value display with Ⓜ. The component database is updated. The following display appears (example):

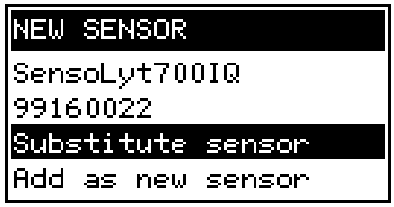

3	Select the required option with ⓐ and confirm with ⓄⓀ. – If *Sensor neu aufnehmen* was selected, the system changes directly to the measured value display. As soon as the IQ sensor is ready for operation, it delivers a measured value. – If *Sensor als Ersatz zuweisen* was selected, a list with the assignable sensors or inactive datasets appears.

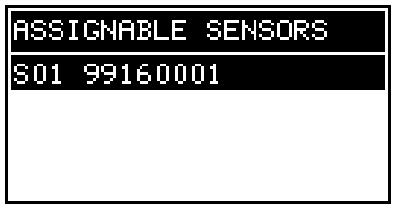

4	Select the required sensor with ⓐ and confirm with ⓄⓀ. The system changes to the measured value display. The IQ sensor takes over all settings of the inactive dataset. As soon as the IQ sensor is ready for operation, it delivers a measured value.

9 Technical data

9.1 DIQ/S 182-PR

Dimensions

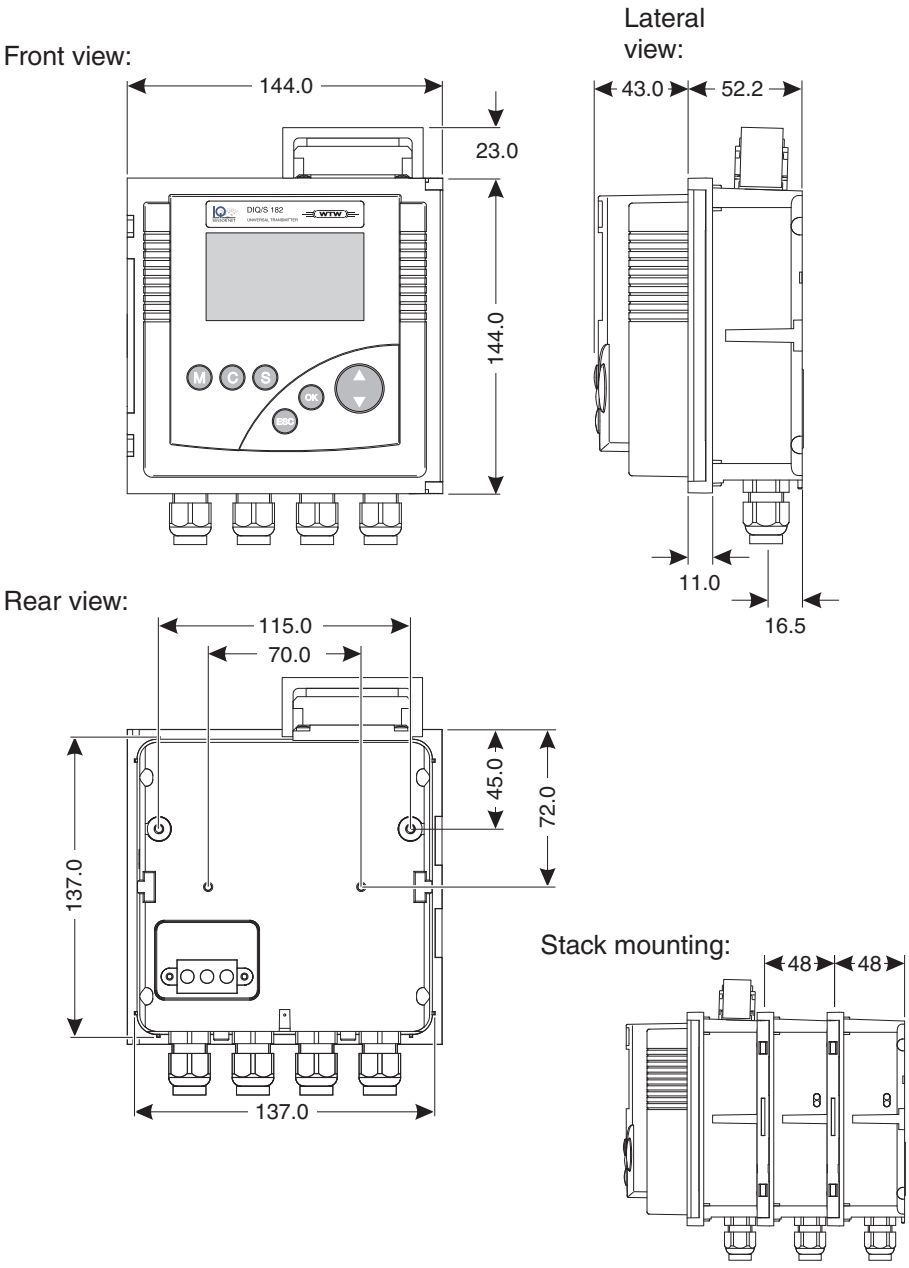

Fig. 9-1 Dimension drawing of the DIQ/S 182-PR (dimensions in mm)

Test marks

cETLus, CE

Mechanical construction

Enclosure material	Polycarbonate with 20 % glass fiber
Weight	Approx. 0.7 kg
Type of protection	– IP 66 – corresponds to NEMA 4X The DIQ/S 182-PR Universal Transmitter is not suitable for Conduit Connection

Ambient conditions

Temperature	
Operation	- 20 °C ... + 55 °C (-4 ... 131 °F)
Storage	- 25 °C ... + 65 °C (-13 ... 149 °F)
Relative humidity	
Yearly average	≤ 90 %
Dew formation	Possible
Site altitude	Max. 2000 m above sea level

Electrical data DIQ/S 182-PR (line power version)

Power supply	Nominal voltage:100 ... 240 VAC ± 10 % Frequency:50/60 Hz according to DIN IEC 60038 Line power connection: 2 pin, N and L Line cross-section of mains connection: Europe:1.5 ... 4.0 mm^2 USA:AWG 14 ... 12 Fuse rating on the operator side: max. 16 A
Protective class	II
Overvoltage category	II
Power consumption	max. approx. 12 W

Electrical data DIQ/S 182-PR/24V (24 V AD/DC version)

Supply	Nominal voltage:24 V AC/DC ± 10 % protective low voltage SELV (Safety Extra Low Voltage) AC frequency:50/60 Hz according to DIN IEC 60038 Connection:2 pin Line cross-section of connections: Europe:1.5 ... 4.0 mm^2 USA:AWG 14 ... 12 Fuse rating on the operator side: max. 16 A
Power consumption	max. approx. 12 W

Electrical connections DIQ/S 182-PR (line power version)

Terminal strip inside the enclosure:

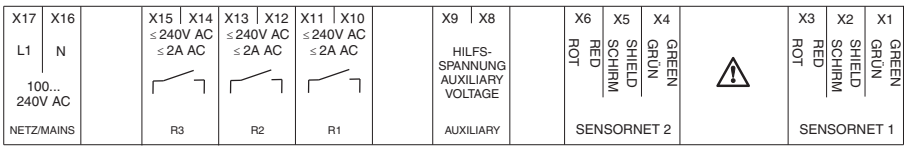

Electrical connections DIQ/S 182-PR/24V (24 V AC/DC version)

Terminal strip inside the enclosure:

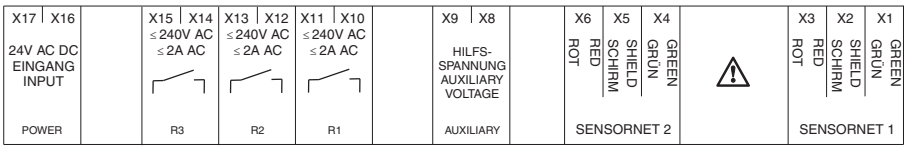

Relay (3 x)

Output	Galvanically separated
Max. switching voltage	240 VAC or 24 VDC
Max. switching current	2 A (AC and DC)
Installation requirements	Fuse rating on the operator side: max. 2 A
Relay functions	Programmable as: – Opener or closer – Limit monitor – Monitoring of the warning and error signals of the DIQ/S 182-PR – Proportional frequency output – Proportional pulse width output

Terminals

Terminal type	Screw-type terminal strip, accessible by opening the lid	
Terminal ranges	Solid wires:	0.2 ... 4.0 mm^2 AWG 24 ... 12
	Flexible wires:	0.2 ... 2.5 mm^2

Cable glands

Suitable for cable diameter	4.5 ... 10 mm or 7 ... 13 mm

PROFIBUS connection

9-pin SUB-D socket on the top of the enclosure, compatible with Phoenix connector (IP 67).

EMC product and system characteristics

EN 61326	EMC requirements for electrical resources for control technology and laboratory use – Resources for industrial areas, intended for indispensable operation – Interference emission limits for resources of class B
System lightning protection	Extended protective characteristics as opposed to EN 61326
FCC, class A	

Any combination of the DIQ/S 182-PR with IQ SENSOR NET products in a user-specific system achieves the listed EMC characteristics.

Instrument safety

Applicable norms	– EN 61010-1 – UL 61010-1 – CAN/CSA C22.2#61010-1

9.2 MIQ modules

Technical data on special MIQ modules are given in the respective operating manuals.

Dimensions

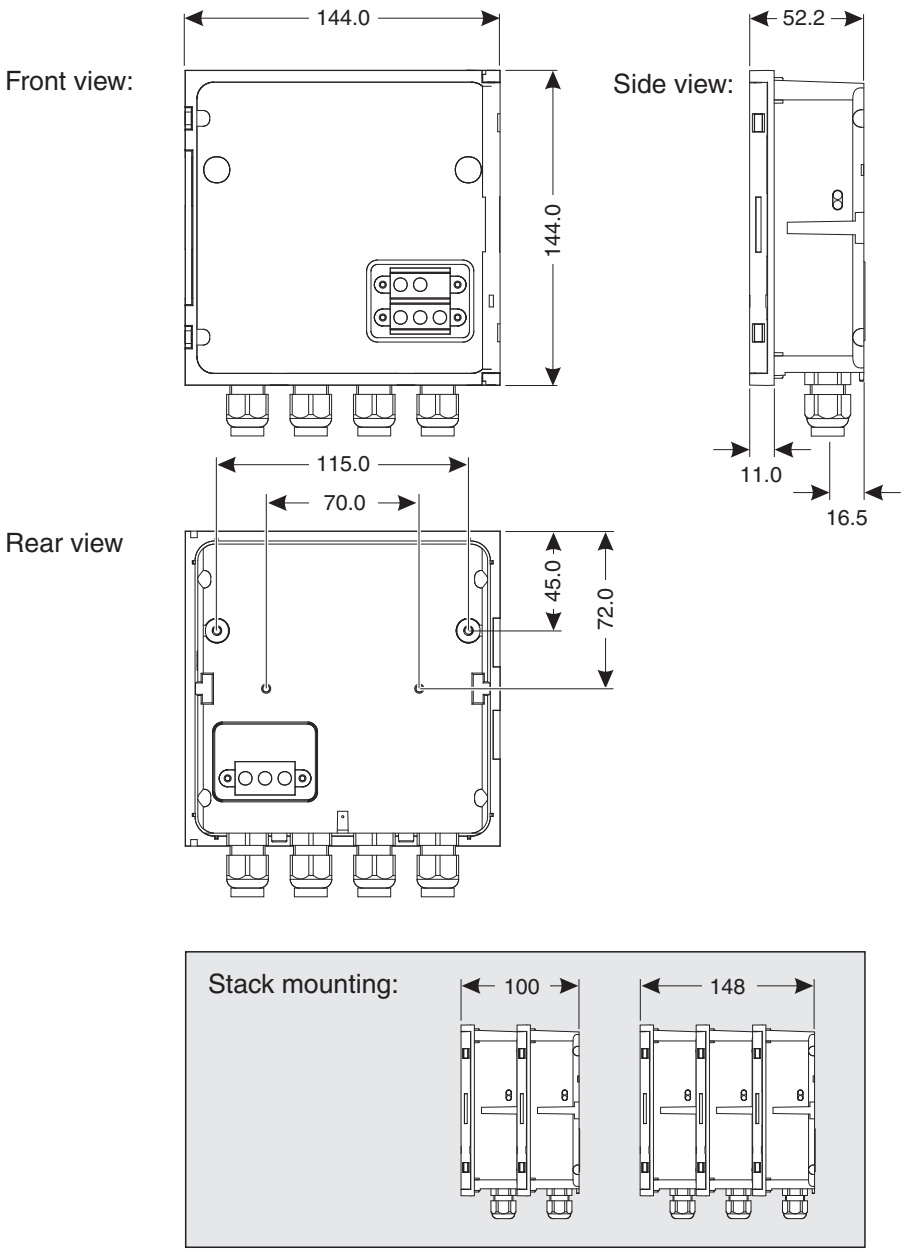

Fig. 9-2 Dimension drawing of MIQ module (dimensions in mm)

Mechanical construction	Maximum number of MIQ modules in a module stack	2 plus Universal Transmitter DIQ/S 182-PR
	Enclosure material	Polycarbonate with 20 % glass fiber
	Weight	Approx. 0.5 kg (type-dependent)
	Type of protection	– IP 66 – In accordance with NEMA 4X MIQ modules are not suitable for conduit connection
Terminal connections	SENSORNET connections	At least two in each MIQ module.
	Further connections	Module-dependent
	Terminal type	Screw-type terminal strip, accessible by opening the lid
	Terminal ranges	Solid wires: 0.2 ... 4.0 mm^2 AWG 24 ... 12 Flexible wires: 0.2 ... 2.5 mm^2
Cable glands	Suitable for cable diameter	4.5 ... 10 mm or 7 ... 13 mm

9.3 DIQ/JB

Dimensions

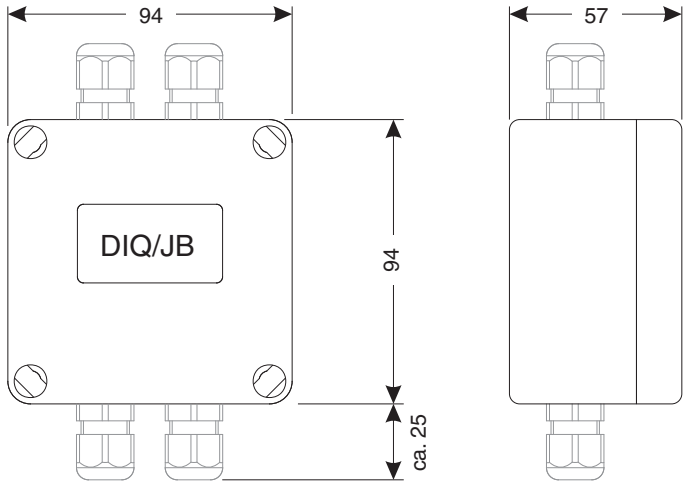

Fig. 9-3 Dimension drawing of DIQ/JB (dimensions in mm)

Mechanical construction

Enclosure material	Polystyrene
Weight	Approx. 0.2 kg
Type of protection	IP 66

Electrical connections

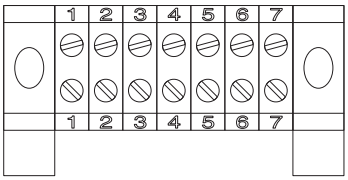

(7 passive, potential free terminals for line extension or branching)

Terminals

Terminal type	Screw-type terminal strip	
Terminal ranges	Solid wires:	0.2 ... 4.0 mm^2 AWG 24 ... 12
	Flexible wires:	0.2 ... 2.5 mm^2
Cable feeds	Prepared openings for installing two screwed cable glands M16 x 1.5 both on the upper and underside	

9.4 DIQ/CHV

Dimensions

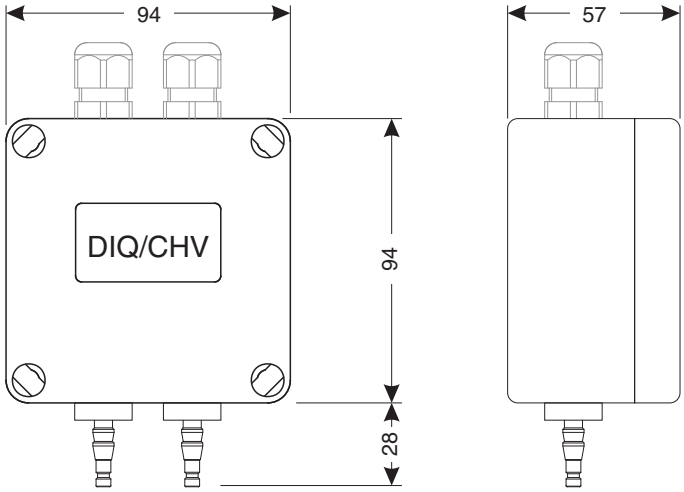

Fig. 9-4 Dimension drawing of DIQ/CHV (dimensions in mm)

Mechanical construction

Enclosure material	Polystyrene
Weight	Approx. 0.3 kg
Type of protection	IP 66

Electrical connections

- 1 x valve switching contact
- 4 x potential-free terminals to connect interface lines

Terminal strip inside the enclosure:



Terminals

Terminal type	Screw-type terminal strip	
Terminal ranges	Solid wires:	0.2 ... 4.0 mm^2 AWG 24 ... 12
	Flexible wires:	0.2 ... 2.5 mm^2
Cable feeds	Prepared openings for installing two screwed cable glands M16 x 1.5 on the upper side	

Valve circuits

Switching voltage	Approx. 22 V
Max. switching current	Approx. 40 mA

NOTE

The valve may only be operated with the auxiliary voltage of the DIQ/S 182-PR Universal Transmitter.

Compressed air

Required air quality	Dry, free of dust and oil
Operating pressure	Max. $7x10^5$ Pa (7 bar) absolute
Connections on the DIQ/CHV	6 mm hose nozzles

9.5 Space required by mounted components

Wall mounting and top hat rail mounting

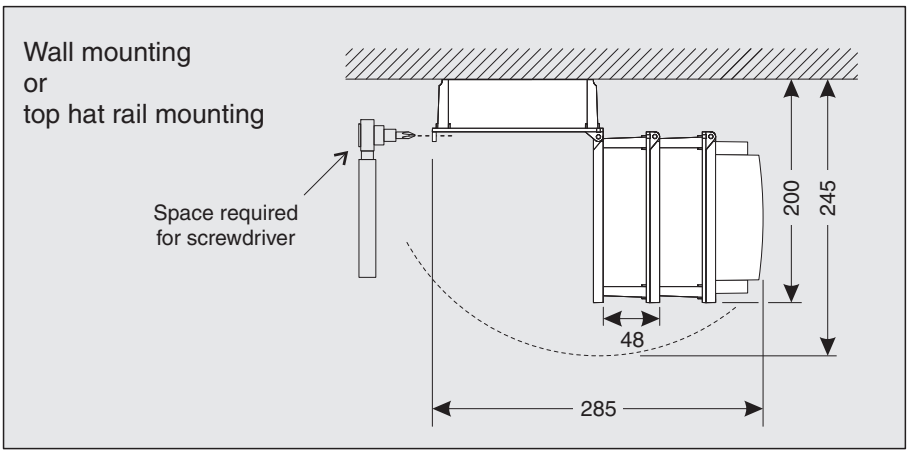

Fig. 9-5 Space required for wall and top hat rail mounting: (dimensions in mm)

Panel mounting

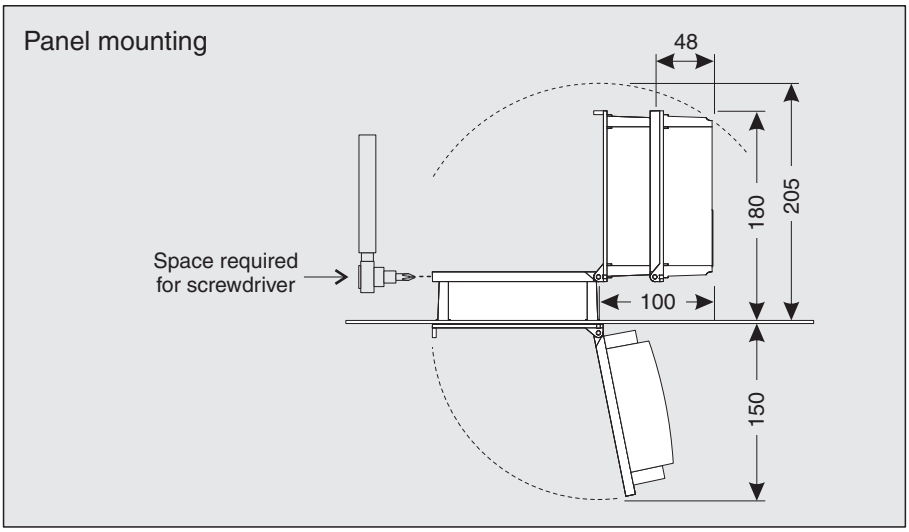

Fig. 9-6 Space required for panel mounting (dimensions in mm)

10 Accessories and options

Description	Model	Order no.
IQ SENSOR NET cable - please specify the required length in m with your order	SNCIQ SNCIQ/UG	480 046 480 047
IQ sensor connection cable		
– 1.5 m	SACIQ-1.5	480 040
– 7.0 m	SACIQ-7.0	480 042
– 15.0 m	SACIQ-15.0	480 044
– Special length up to max. 100 m	SACIQ-SO	480 041V
– 20 m (seawater version)	SACIQ-20.0 SW	480 045
– 25 m (seawater version)	SACIQ-25.0 SW	480 066
– 50 m (seawater version)	SACIQ-50.0 SW	480 060
– 75 m (seawater version)	SACIQ-75.0 SW	480 067
– 100 m (seawater version)	SACIQ-SO SW	480 062
– Special length (seawater version)	SACIQ-SO SW	480 064V
Set with four cable glands for cable sheath diameter of 7 to 13 mm	EW/1	480 051
Branching module	DIQ/JB	472 005
Valve module	DIQ/CHV	472 007
Set for mounting of one or two DIQ modules to a WTW mounting stand	MS/DIQ	472 009
Sun shield for the DIQ/S 182-PR	SSH/IQ	109 295
Set for wall mounting of the DIQ/S 182-PR or an MIQ module	WMS/IQ	480 052
Set for panel mounting of the DIQ/S 182-PR or an MIQ module; switch panel aperture 138 x 138 mm according to DIN 43700 or IEC 473 (max. thickness 15 mm)	PMS/IQ	480 048
Set for mounting of the DIQ/S 182-PR or an MIQ module on a 35 mm top hat rail according to EN 50022	THS/IQ	480 050



Other accessories for the System 182 are given in the WTW catalog or on the Internet.

11 Index

A

Air pressure 5-4
Altitude 5-4
Ambient conditions 9-2
Auxiliary voltage
  Terminal strip 3-46
  Usage 3-40

C

Calibration
  Calibration data 4-12
  General proceeding 4-15
Calibration data 4-12
Cleaning
  compressed air-driven 6-21
  of module enclosures 7-1
Compressed air cleaning 6-21
Configuring passwords 4-17
Contact base 3-8, 3-11
Contrast (display) 5-4

D

Date/time 5-4
Delivery condition 5-4
Dimensions
  DIQ/S 182 9-1
  DIQCHV 9-8
  DIQJB 9-7
  MIQ modules 9-5
Display contrast 5-4

E

Effects of the weather 3-20
Electrical data
  DIQ/S (24 V version) 9-3
  DIQ/S (line power version) 9-2
EMC characteristics 9-4
erasing a link 6-3
Error symbol 4-3, 4-11

F

Frequency output (relay) 6-18

I

Inactive dataset 5-3, 8-3
Info symbol 4-3, 4-11

K

Key functions 4-1

L

Language 5-1
  Setting 5-1
  System language 5-1
Lightning protection
  External protective measures 3-4
  Installation guidelines 3-3
  Internal protective measures 3-4
Limit indicator (relay) 6-17
Line length, maximum 3-14, 3-18
Line power connection
  24 V version 3-35
  Line power version 3-31
Linking outputs 6-2
Log book 8-1
  open 4-13
  Structure 4-12

M

Maintenance activities 7-1
Maintenance condition
  automatic activation 4-10
  during calibration 4-10
  during compressed air cleaning 4-10
  during maintenance 4-10
  General information 4-9
Measured values
  Double display 4-2
  Single display 4-2
Message code 4-13
Message text 4-13
Mounting
  Connecting MIQ modules 3-6
  Distributed mounting 3-14

O

Operating elements 4-1

P

Password
Calibration 4-17
Settings 4-17
Power failure 1-3
Pulse width output (relay) 6-19

R

Relay
Behavior in case of error 6-25
Behavior in non-operative condition ..6-25
Display of states 4-2
Functions and settings 6-14
Terminal strip 3-46
Replacement
of IQ sensors 8-3
of passive components 8-2

S

Sensor conditions, special ones 4-3
Sensor connection cable SACIQ 3-18
Sensor monitoring (relay) 6-16
Sensor status 4-11
Sensor-controlled cleaning 6-20
SENSORNET connection 3-17
SENSORNET connection (terminal strip) 3-46
SNCIQ cable 3-14
SNCIQ/UG earth cable 3-14
Special user qualifications 2-3
Stack expansion
backwards 3-11
forwards 3-8
Start checklist 3-42
Starting the system 3-42
Status
sensor 4-11
System 4-8
System language 5-1
System monitoring (relay) 6-15
System status 4-8

T

Target group 2-2
Terminal strips (figures) 3-46
Time 5-4
Toggle switch 4-1
Types of installation 3-20

12 Appendix (store separately if required)

12.1 Forgotten the password?

Proceeding: prompting the password

1	Open the *SETTINGS* menu with (S).
2	Depending on the password to be prompted, use (▲▼) and (OK) to select and confirm the menu item, *Settings* 🔓 / 🔒 or *Calibrate* 🔓 / 🔒. The following display appears:



or

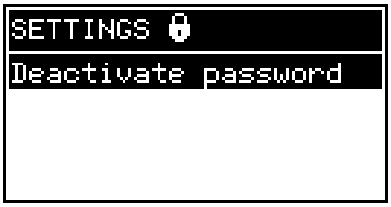

3	First press (C), then press (S). The current password is displayed.



4	Quit the display of the password with (OK).

12.2 Default passwords

In the default condition of the Universal Transmitter both passwords are set to 1000.

Xylem |ˈzīləm|

1) Das Gewebe in Pflanzen, das Wasser von den Wurzeln nach oben befördert;
2) ein führendes globales Wassertechnikunternehmen.

Wir sind 12.000 Menschen, die ein gemeinsames Ziel eint: innovative Lösungen zu schaffen, um den Wasserbedarf unserer Welt zu decken. Im Mittelpunkt unserer Arbeit steht die Entwicklung neuer Technologien, die die Art und Weise der Wassernutzung und Wiedernutzung in der Zukunft verbessern. Wir bewegen, behandeln, analysieren Wasser und führen es in die Umwelt zurück, und wir helfen Menschen, Wasser effizient in ihren Haushalten, Gebäuden, Fabriken und landwirtschaftlichen Betrieben zu nutzen. In mehr als 150 Ländern verfügen wir über feste, langjährige Beziehungen zu Kunden, bei denen wir für unsere leistungsstarke Mischung aus führenden Produktmarken und Anwendungskompetenz, unterstützt durch eine Tradition der Innovation, bekannt sind.

Weitere Informationen darüber, wie Xylem Ihnen helfen kann, finden Sie auf xyleminc.com

WTW
a xylem brand

Wissenschaftlich-Technische Werkstätten GmbH

Dr.-Karl-Slevogt-Straße 1
D-82362 Weilheim
Germany

Tel: +49 881 183-0
Fax: +49 881 183-420
E-Mail: info@wtw.com
Internet: www.wtw.com