GOULDS WATER TECHNOLOGY
xylem

Repair parts
RSES R22

Effluent, sewage and grinder

Wastewater pumps

xylem
Let's Solve Water

Index

3885 (WE – – – L, M, H, HH) 3
2ED 5
3886/3887 (WS – B, BF, BHF) 8
3887BF (WS – BF) 9
3887BHF (WS – – – – BHF) 9
2WD/3WD 10
3888D3/D4 (WS – – – D3, D4) 12
3888V3/V4 (WS___V3,V4) 14
3SDX/4SDX 16
1GD 18
4NS/4XD 20
RGS2012 22
AGS 23
1GA/2GA 24
Oil volumes 24

Model 3885 – WE Series

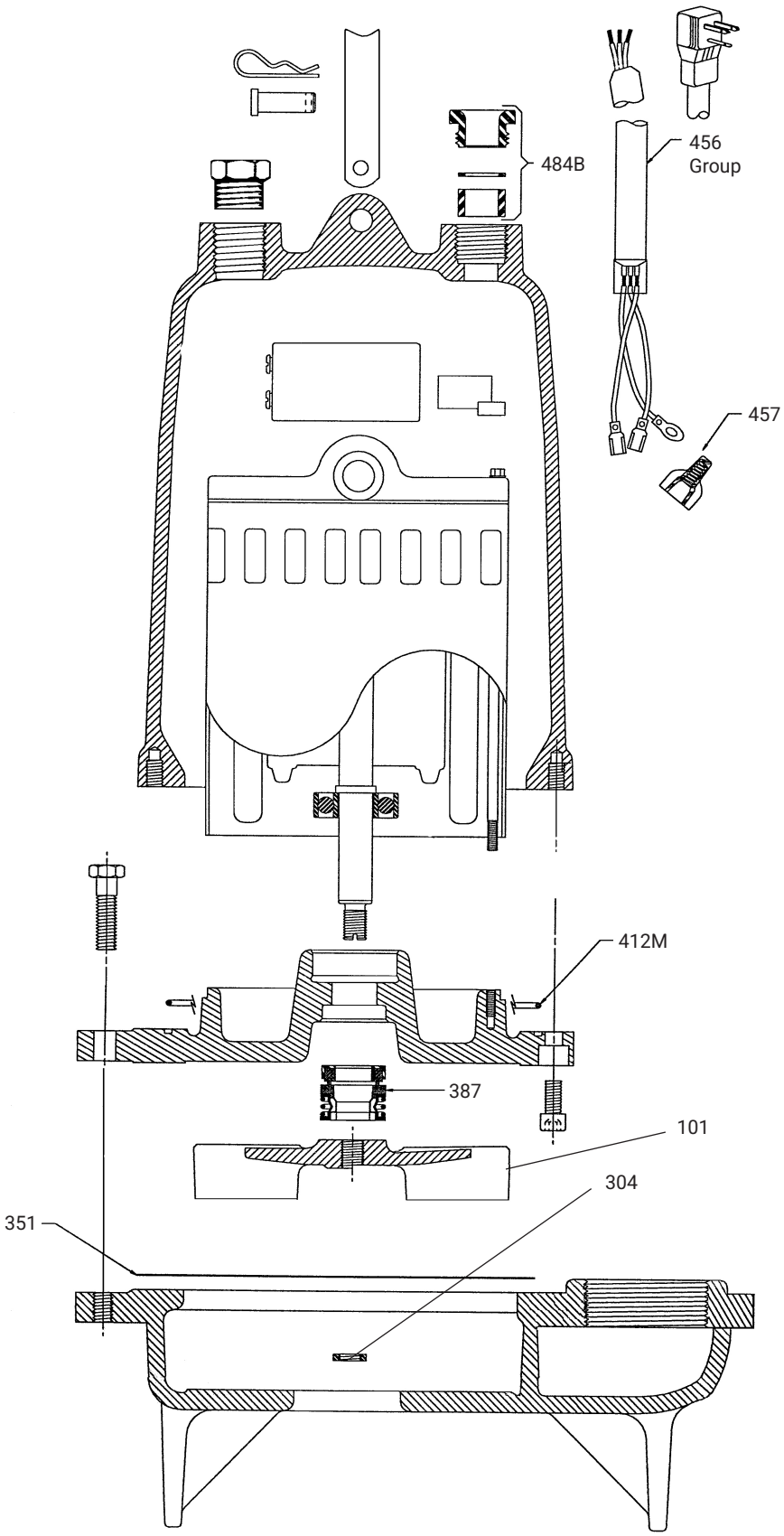

Model 3885

Item no.	Part description	Quantiy required	Repair parts order number
351/387/412M	Repair kit (gasket/shim set/ mechanical seal/o-ring)	1	WEREPKIT
457/484B/456	20 ft. Power cable kit 1PH: 1/3HP, 115V; standard with plug/ strain relief assembly	1	WWPOWKIT1
	20 ft. Power cable kit 1PH: 1/2HP, 115V; standard with plug/ strain relief assembly		WWPOWKIT2
	20 ft.Power cable kit 1PH: 1/3HP and 1/2HP, 208V and 230V; standard with plug/strain relief assembly		WWPOWKIT3
	20 ft. Power cable kit 1PH: 3/4HP and 1HP, 208V and 230V; standard with plug/strain relief assembly		WWPOWKIT4
	20 ft. Power cable kit 1PH: 1 - 1/2HP, 208V and 230V; with bare leads/strain relief assembly		WWPOWKIT5
	20 ft. Power cable kit 1PH: 2HP, 230V; with bare leads/wire nuts/strain relief assembly		WWPOWKIT6
	20 ft. Power cable kit 3PH: 1/2HP-2HP, 200-230/460/575V; with bare leads/wire nuts/strain relief assembly		WWPOWKIT7

Item no.	Part description	Quantiy required	Repair parts order number					
			1/3HP	1/2HP	3/4HP	1HP	1- 1/2HP	2HP
101	Impeller	1	2K158	2K220	2K219	2K218	2K217	2K840
	Impeller- high head "HH"		N/A	2K225	N/A	N/A	2K221	N/A
304	Impeller locknut-all	1	13K286					
412M	O-ring - motor cover	1	4K252					

Model 2ED

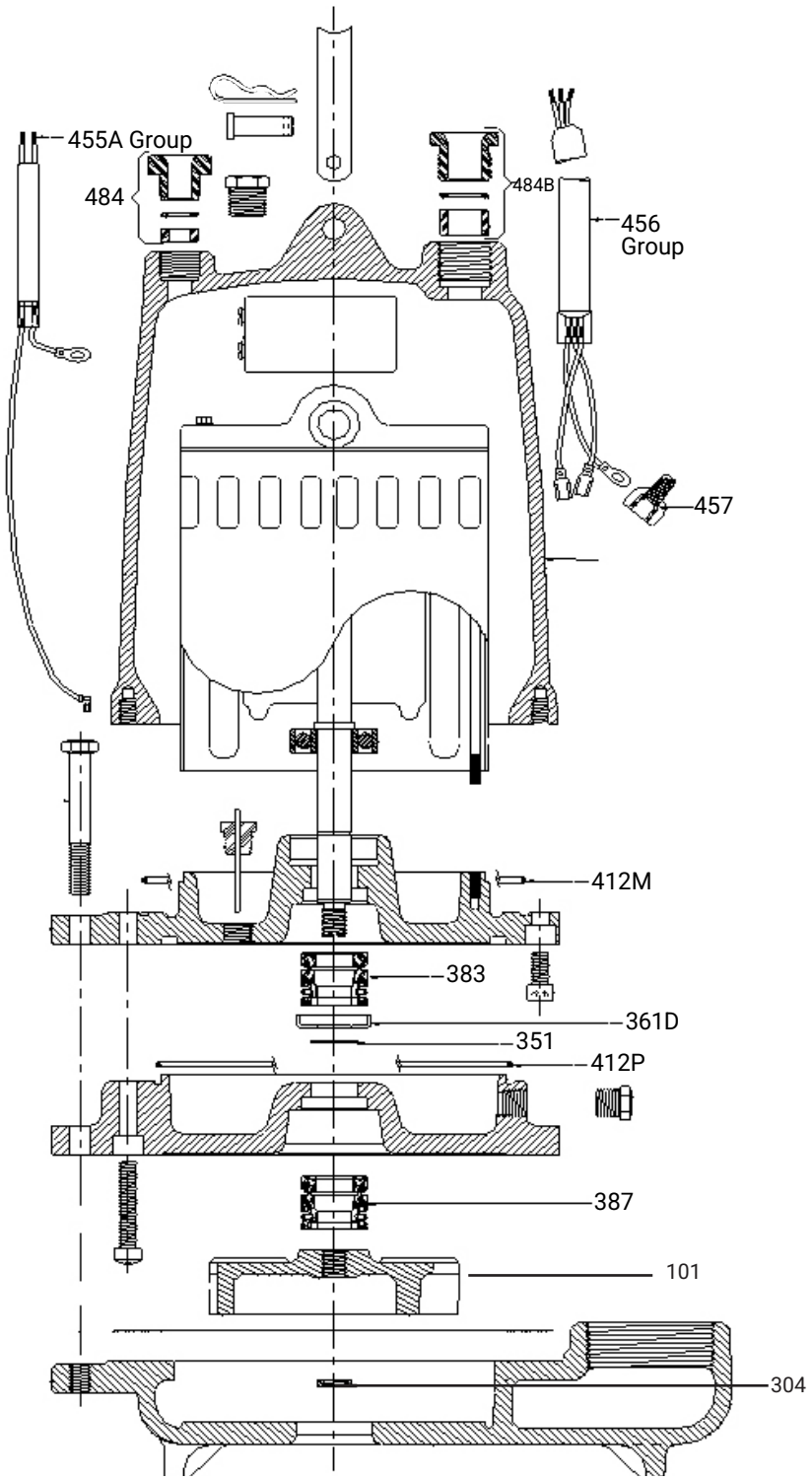
455A Group
484
484B
456
Group
457
412M
383
361D
351
412P
387
101
304

Model 2ED

Item no.	Part description	Quantiy required	Repair parts order number
351/361/361D/383, 387/412M/412P	Repair kit-gasket/shim set/retaining ring/seal retainer/ mechanical seals/o-rings	1	2EDREPKIT
456/457/484B	20 ft. Power cable kit 1PH: 1/3HP, 115V; standard with plug/ strain relief assembly	1	WWPOWKIT1
	20 ft. Power cable kit 1PH: 1/2HP, 115V; standard with plug/ strain relief assembly		WWPOWKIT2
	20 ft. Power cable kit 1PH: 1/3HP and 1/2HP, 208V and 230V; standard with plug/strain relief assembly		WWPOWKIT3
	20 ft. Power cable kit 1PH: 1 1/2HP, 208V and 230V; with bare leads/strain relief assembly		WWPOWKIT5
	20 ft. Power cable kit 3PH: 1/2HP-1 1/2HP, 200-230/460/575V; with bare leads/wire nuts/strain relief assembly		WWPOWKIT7
455A/457/484	20 ft. mechanical seal sensor: standard/wire nuts/strain relief assembly	1	WWSENKIT1
	20 ft. seal/heat sensor: optional for 3-phase models/wire nuts/strain relief assembly	1	WWSENKIT2

Item no.	Part description	Quantiy required	Repair parts order number					
			1/3HP	1/2HP	3/4HP	1HP	1 - 1/2HP	2HP
101	Impeller	1	2K158	2K220	2K219	2K218	2K217	2K840
	Impeller- high head "HH"		N/A	2K225	N/A	N/A	2K221	N/A
304	Impeller locknut-all	1	13K286					
412M	O-ring - motor cover	1	4K252					

Models 3886, 3887 (WS_B, WS_BF, WS_BHF)

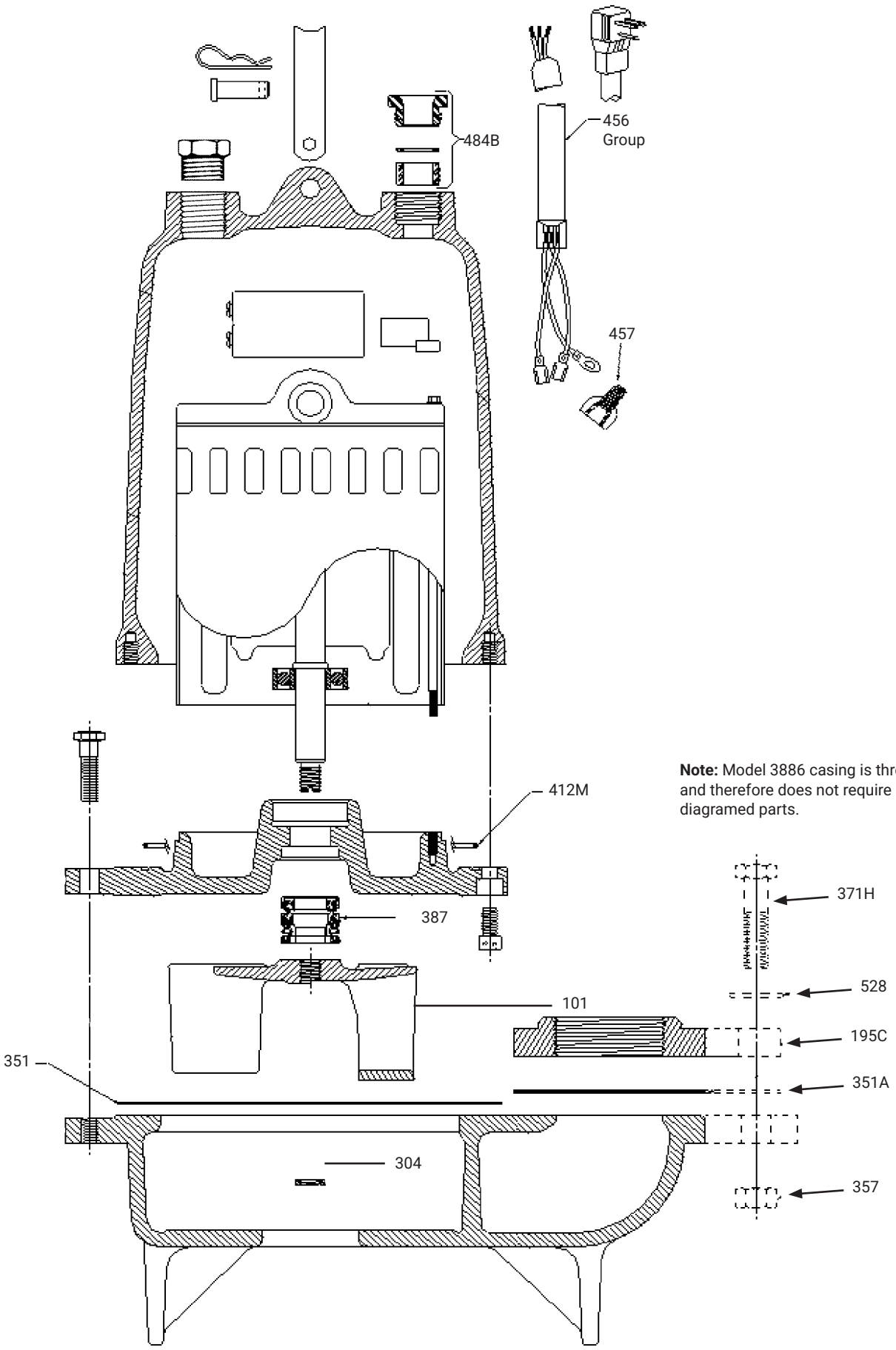

Note: Model 3886 casing is threaded 2" NPT and therefore does not require some of the diagramed parts.

Model WSB

Item no.	Part description	Quantiy required	Repair parts order number
351/387/412M	Repair kit (gasket/mechanical seal/o-ring)	1	WSBBFREPKIT
457/484B/456	20 ft. Power cable kit 1PH: 1/3HP, 115V; standard with plug/ strain relief assembly	1	WWPOWKIT1
	20 ft. Power cable kit 1PH: 1/2HP, 115V; standard with plug/ strain relief assembly		WWPOWKIT2
	20 ft. Power cable kit 1PH: 1/3HP and 1/2HP, 208V and 230V; standard with plug/strain relief assembly		WWPOWKIT3
	20 ft. Power cable kit 1PH: 3/4HP and 1HP, 208V and 230V; standard with plug/strain relief assembly		WWPOWKIT4
	20 ft. Power cable kit 3PH: 1/2HP-1HP, 200-230/460/575V; with bare leads/wire nuts/strain relief assembly		WWPOWKIT7

Model 3887 (WS_BF)

Item no.	Part description	Quantiy required	Repair parts order number
351/387/412M	Repair kit (gasket/mechanical seal/o-ring)	1	WSBBFREPKIT
457/484B/456	20 ft. Power cable kit 1PH: 1/3HP, 115V; standard with plug/ strain relief assembly	1	WWPOWKIT1
	20 ft. Power cable kit 1PH: 1/2HP, 115V; standard with plug/ strain relief assembly		WWPOWKIT2
	20 ft. Power cable kit 1PH: 1/3HP and 1/2HP, 208V and 230V; standard with plug/strain relief assembly		WWPOWKIT3
	20 ft. Power cable kit 1PH: 3/4HP and 1HP, 208V and 230V; standard with plug/strain relief assembly		WWPOWKIT4
	20 ft. Power cable kit 3PH: 1/2HP-1HP, 200-230/460/575V; with bare leads/wire nuts/strain relief assembly		WWPOWKIT7
371H/528/195C/ 351A/357	discharge flange kit- standard 2"	1	A1-2 KIT
	discharge flange kit- optional 3"		A1-3 KIT

Model 3887 (WS_BHF)

Item no.	Part description	Quantiy required	Repair parts order number
351/387/412M	Repair kit (gasket/mechanical seal/o-ring)	1	WSBHFREPKIT
457/484B/456	20 ft. Power cable kit 1PH: 1/3HP, 115V; standard with plug/ strain relief assembly	1	WWPOWKIT1
	20 ft. Power cable kit 1PH: 1/2HP, 115V; standard with plug/ strain relief assembly		WWPOWKIT2
	20 ft. Power cable kit 1PH: 1/3HP and 1/2HP, 208V and 230V; standard with plug/strain relief assembly		WWPOWKIT3
	20 ft. Power cable kit 1PH: 3/4HP and 1HP, 208V and 230V; standard with plug/strain relief assembly		WWPOWKIT4
	20 ft. Power cable kit 1PH: 2HP, 230V; with bare leads/wire nuts/strain relief assembly		WWPOWKIT6
	20 ft. Power cable kit 3PH: 1/2HP-2HP, 200-230/460/575V; with bare leads/wire nuts/strain relief assembly		WWPOWKIT7
371H/528/195C/ 351A/357	discharge flange kit- standard 2"	1	A1-2 KIT
	discharge flange kit- optional 3"		A1-3 KIT

Model WSB

Item no.	Part description	Quantiy required	Repair parts order number			
			1/3HP	1/2HP	3/4HP	1HP
101	Impeller	1	2K268	2K239	2K240	2K241
304	Impeller locknut-all	1	13K286			
412M	O-ring - motor cover	1	4K252			

Model 3887 (WS_BF)

Item no.	Part description	Quantiy required	Repair parts order number			
			1/3HP	1/2HP	3/4HP	1HP
101	Impeller	1	2K268	2K239	2K240	2K241
304	Impeller locknut-all	1	13K286			
412M	O-ring - motor cover	1	4K252			

Model 3887 (WS_BHF)

Item no.	Part description	Quantiy required	Repair parts order number					
			1/3HP	1/2HP	3/4HP	1HP	1 1/2HP	2HP
101	Impeller	1	2K858	2K856	2K854	2K852	2K800	2K798
304	Impeller locknut-all	1	13K286					
412M	O-ring - motor cover	1	4K252					

Model 2WD/3WD

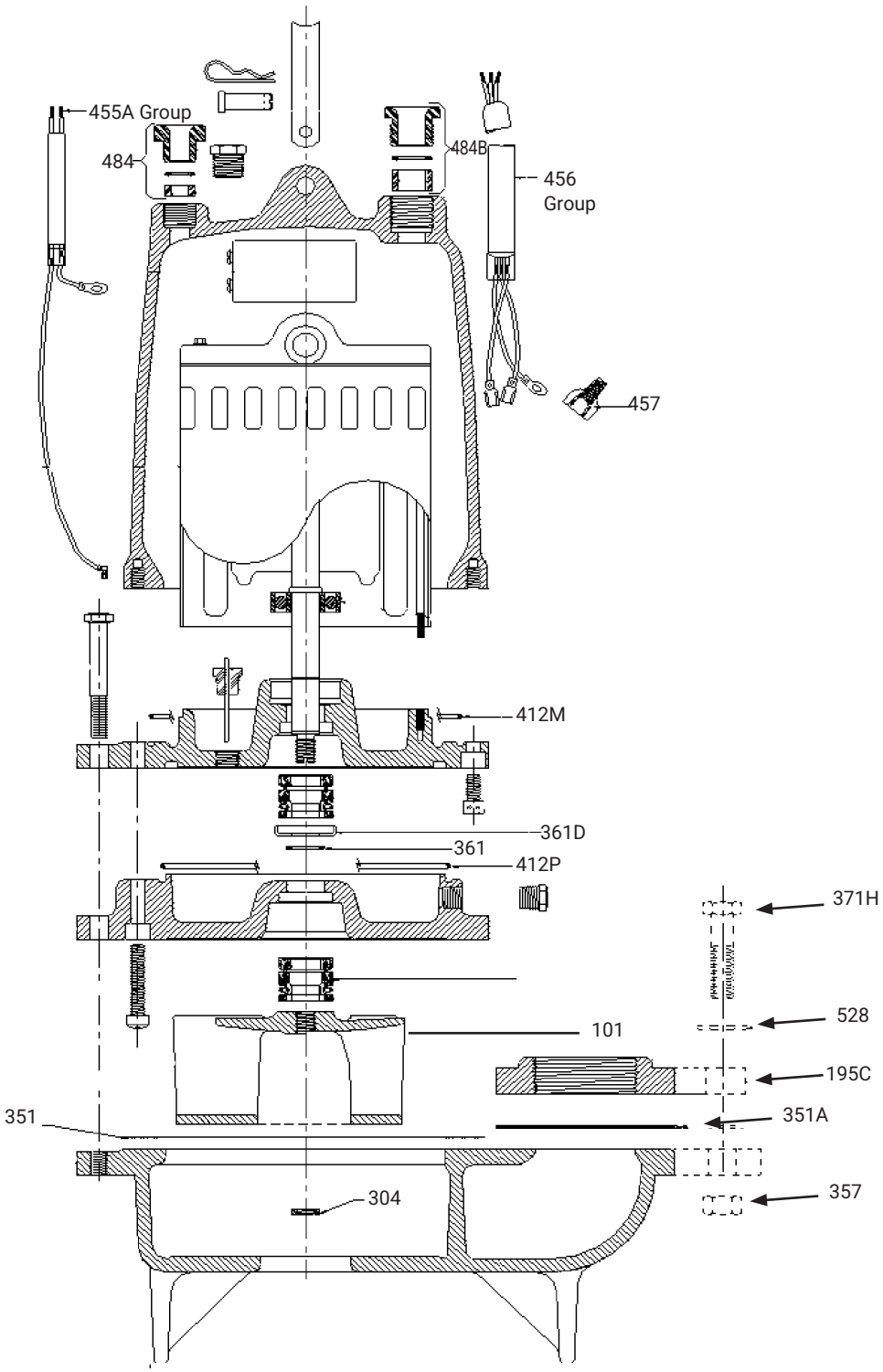

Model 2WD/3WD

Item no.	Part description	Quantiy required	Repair parts order number
351/361/361D/ 412M/412P	Repair kit:gasket/retaining ring/seal retainer/mechanical seals/o-rings	1	2WDREPKIT
456/457/484B	20 ft. Power cable kit 1PH: 1/3HP, 115V; standard with plug/ strain relief assembly	1	WWPOWKIT1
	20 ft. Power cable kit 1PH: 1/2HP, 115V; standard with plug/ strain relief assembly		WWPOWKIT2
	20 ft. Power cable kit 1PH: 1/3HP and 1/2HP, 208V and 230V; standard with plug/strain relief assembly		WWPOWKIT3
	20 ft. Power cable kit 1PH: 1HP, 208V and 230V; with bare leads/strain relief assembly		WWPOWKIT5
	20 ft. Power cable kit 3PH: 1/2-1HP,200-230/460/575V with bare leads/wire nuts/strain relief assembly		WWPOWKIT7
455A/457/484	20 ft. Mechanical seal sensor: standard for all models/wire nuts/strain relief assembly	1	WWSENKIT1
	20 ft. Seal/heat sensor: optional for 3-phase models/wire nuts/strain relief assembly	1	WWSENKIT2
371H/528/195C/ 351A/357	discharge flange kit- standard 2"	1	A1-2 KIT
	discharge flange kit- optional 3"		A1-3 KIT

Item no.	Part description	Quantiy required	Repair parts order number			
			1/3HP	1/2HP	3/4HP	1HP
101	Impeller 3500 RPM	1	2K858	2K856	2K854	2K852
	Impeller 1750 RPM		2K268	2K239	2K240	2K241
304	Impeller locknut-all	1	13K286			
412M	O-ring - motor cover	1	4K252			

Models 3888D3/3SD, 3888D4/4SD

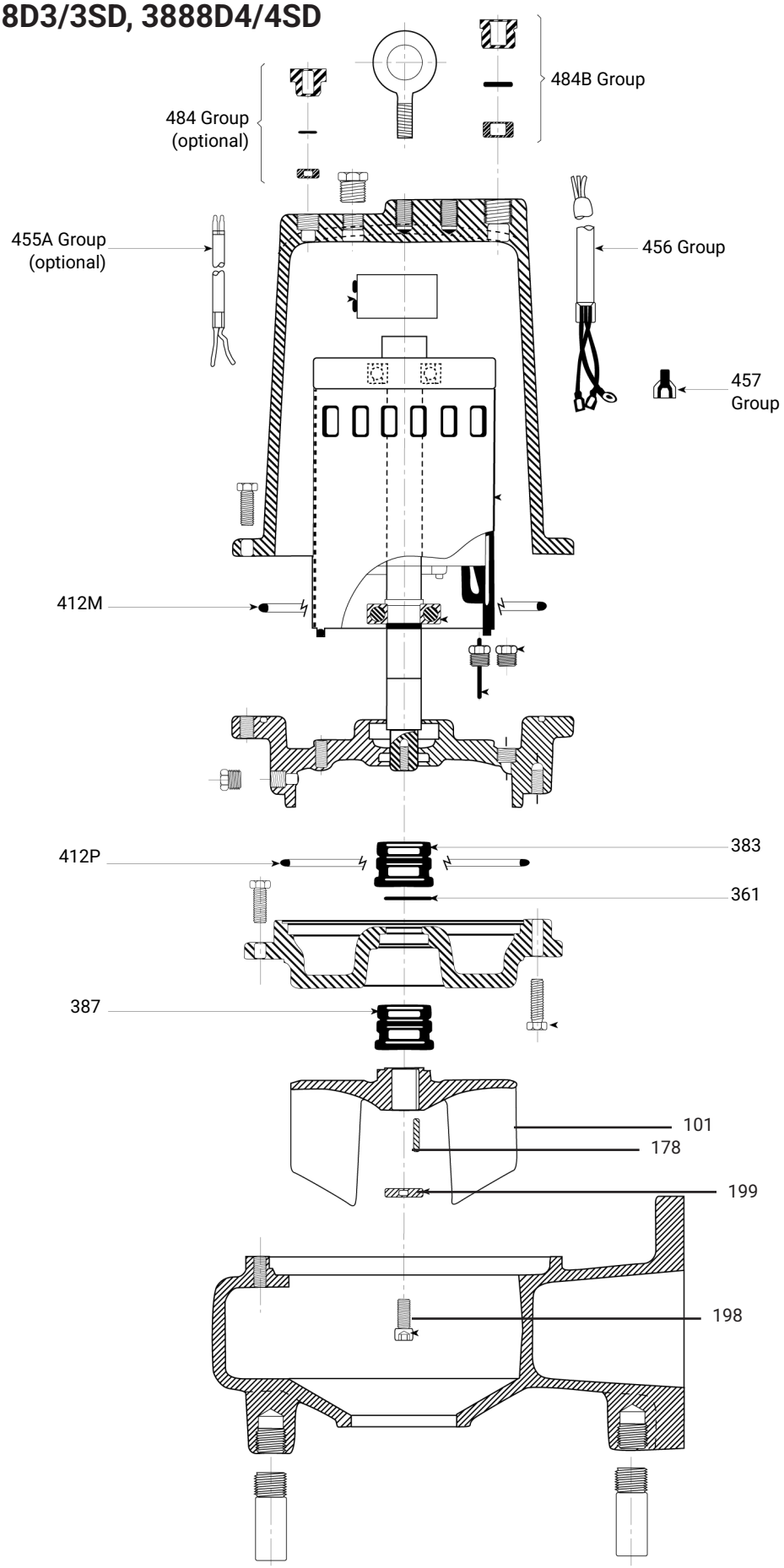

Models 3888D3/3SD, 3888D4/4SD

Item no.	Part description	Quantiy required	Repair parts order number
361/383/387/ 412M/412P	Repair kit (retaining ring/mechanical seal/o-rings)	1	3888SDREPKIT
457/484B/456	20 ft. Power cable kit 1PH: 1.1/2HP and 2HP, 230V, standard with bare leads/wire nuts/strain relief assembly	1	WWPOWKIT6
	20 ft. Power cable kit 1PH: 2HP,3HP and 5HP, 208V, standard with bare leads/wire nuts/strain relief assembly	1	WWPOWKIT8
	20 ft. Power cable kit 3PH:1.1/2HP, 2HP,3HP(except 200V) and 5HP,460V,575V-bare leads/wire nuts/strain relief assembly	1	WWPOWKIT7
	20 ft. Power cable kit 3PH:3HP,200V,5HP 200/230V and all 7.1/2HP- bare leads/wire nuts/strain relief assembly	1	WWPOWKIT9
455A/457/484	20 ft. Mechanical seal Sensor: Standard on 3SD and 4SD. (N/A on 3888D3 nor 3888D4)/wire nuts/strain relief assembly	1	WWSENKIT1
	20 ft. Seal/heat sensor: Optional on 3SD and 4SD/wire nuts/strain relief assembly	1	WWSENKIT2

Item no.	Part description	Quantiy	Repair parts order number					
			1 1/2HP M	1 1/2HP	2HP	3HP	5HP	7 1/2HP
`101, 178, 198, 199, 412M	Impeller kit 3888D3/3SD	1	D3IMPKIT1	D3IMP-KIT2	D3IMP-KIT3	D3IMP-KIT4	D3IMP-KIT5	N/A
	Impeller kit 3888D4/4SD	1	D4IMPKIT1	D4IMP-KIT2	D4IMP-KIT3	D4IMP-KIT4	D4IMP-KIT5	D4IMP-KIT6

**impeller kis include impeller, impeller bolt, impeller key, impeller washer and o-ring for bearing housing to motor cover*

Vortex 3888V3, 3888V4

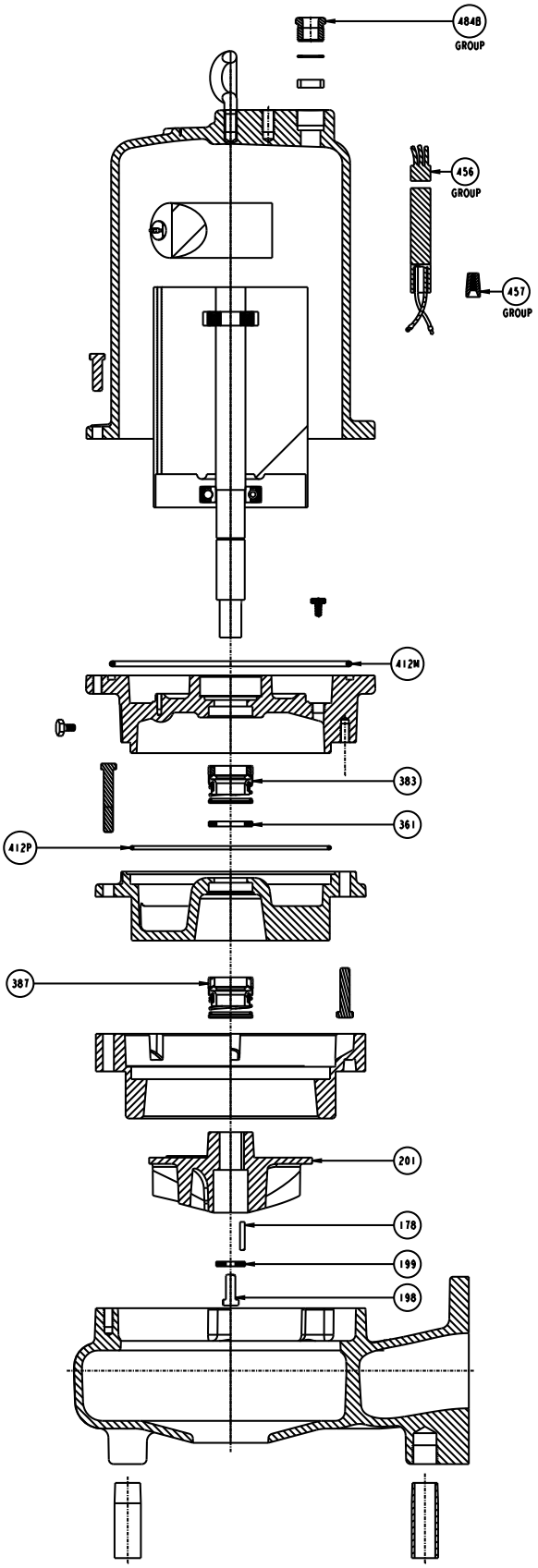

Vortex 3888V3, 3888V4

Item no.	Part description	Quantiy required	Repair parts order number
361/383/387/ 412M/412P	Repair kit (retaining ring/mechanical seal/o-rings)	1	3888SDREPKIT
457/484B/456	20 ft. Power cable kit 1PH: 1.1/2HP and 2HP, 230V, standard with bare leads/wire nuts/strain relief assembly	1	WWPOWKIT6
	20 ft. Power cable kit 1PH: 2HP,3HP and 5HP, 208V, standard with bare leads/wire nuts/strain relief assembly	1	WWPOWKIT8
	20 ft. Power cable kit 3PH:1.1/2HP, 2HP,3HP(except 200V) and 5HP,460V,575V-bare leads/wire nuts/strain relief assembly	1	WWPOWKIT7
	20 ft. Power cable kit 3PH:3HP,200V,5HP 200/230V and all 7.1/2HP- bare leads/wire nuts/strain relief assembly	1	WWPOWKIT9

Item no.	Part description	Quantity	Repair part order no.				
			1 1/2HP	2 HP	3HP	5HP	7.5HP
101, 178, 198, 199, 412M, 201	Impeller kit 3888V3	1	V3IMPKIT1	V3IMPKIT2	V3IMP-KIT3	V3IMP-KIT4	N/A
	Impeller kit 3888V4	1	N/A	V4IMPKIT1	V4IMP-KIT2	V4IMP-KIT3	V4IMP-KIT4

**impeller kis include impeller, impeller bolt, impeller key, impeller washer and o-ring for bearing housing to motor cover*

ModelS 3SDX/4SDX

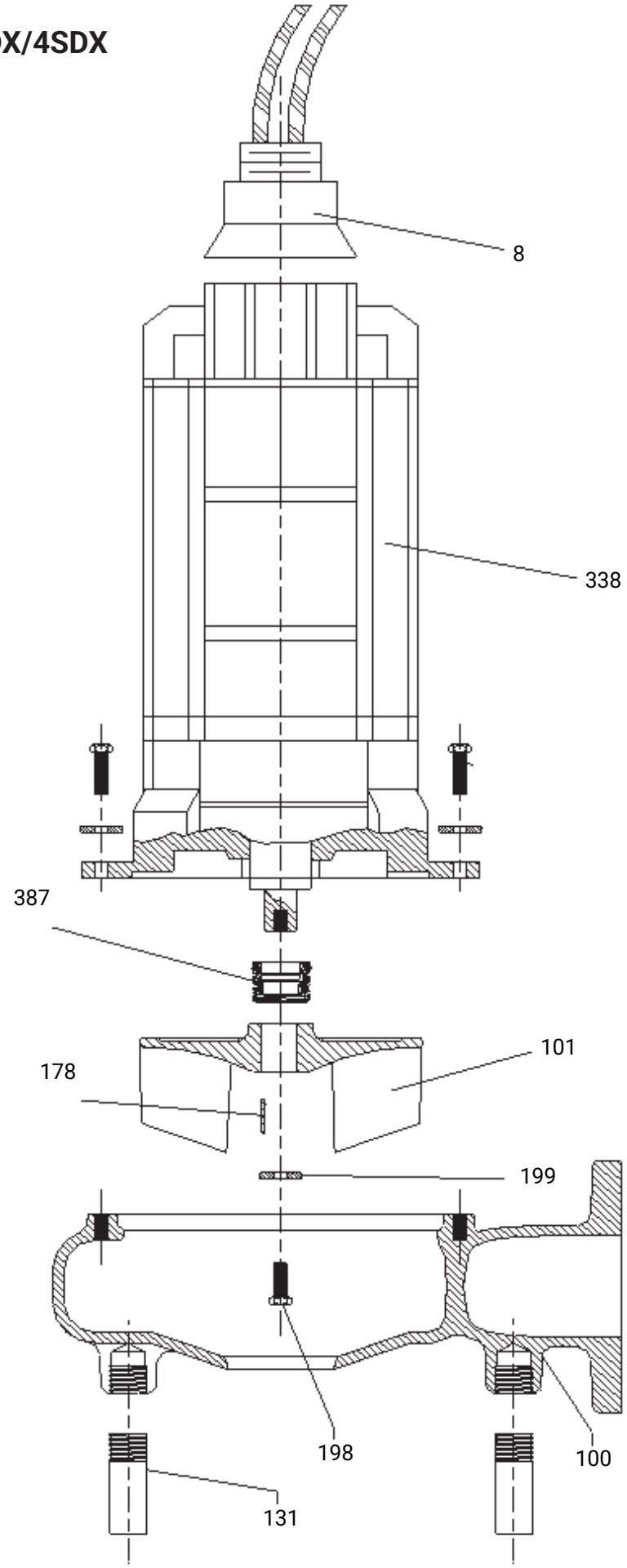

ModelS 3SDX/4SDX

Item no.	Part description		Material	Qty. reqd.	Repair parts order number					Max. Wt. (lbs.)
					1750 RPM					
					1½ HP	2 HP	3 HP	5 HP	7½ HP	
100	Casing – 3SDX		Cast iron	1	1K429					35.0
	Casing – 4SDX				1K428					53.0
101	Impeller – 3SDX		Cast iron	1	2K918 $5^{13}/_{16}$"	2K916 $6^{1}/_{8}$"	2K914 6¾"	2K912 $7^{5}/_{8}$"	2K910 $8^{5}/_{16}$"	–
	Impeller – 4SDX		Cast iron		N/A	2K904 $5^{11}/_{16}$"	2K906 $6^{5}/_{16}$"	2K908 $7^{1}/_{8}$"	2K532 $7^{11}/_{16}$"	–
131	Foot - standard		Steel	3	4K42					–
	Foot - optional		Cast iron	1 Kit	4K625					–
178	Impeller key		AISI 300 SS	1	4K11					–
198	Impeller bolt		17-4 PH	1	13K48					–
199	Impeller washer		AISI 300 SS	1	13L39					–
338	Motor	1-phase, 230V	Stainless steel	1	278-72 12	278-72 22	278-72 32	N/A	N/A	180TY 200 lbs. Air Filled
		3-phase, 200V			278-72 13	278-72 23	278-72 33	278-72 43	278-72 53	
		3-phase, 230V			278-72 14	278-72 24	278-72 34	278-72 44	278-72 54	
		3-phase, 460V			278-72 15	278-72 25	278-72 35	278-72 45	278-72 55	
		3-phase, 575V			278-72 16	278-72 26	278-72 36	278-72 46	278-72 56	
387	Mechanical seal – standard		Carbon/Ceramic	1	10K137 (180TY)					–
	Mechanical seal – optional		Silicon/Silicon	1	10K134 (180TY)					
	Mechanical seal – optional		Silicon/Tungsten	1	10K135 (180TY)					

Reliance	Part description	Material	Quantity	Repair no.	Motor frame
Motor repair parts	Mechanical seal kit - upper and lower	Carbon/Ceramic	1 set	10K183	180TY
	Bearing kit – upper and lower	Steel	1 set	4K700	
	O-ring kit	BUNA-N	1 set	5K422	

Item no.	Models 3SDX/4SDX, power and control cap/cables	Type and AWG size	Standard length	Optional lengths	Wt. (lbs./5 ft.)
			25'	50'	
8	1-Ph: 1½, 2 and 3 HP, 230V, 180TY	SOW, SOOW – 8/4	9K359	9K360	–
	3-Ph: 5 HP, 200-230/460V, 180TY	SOW, SOOW – 12/4	9K365	9K366	–
	3-Ph: 7½ HP, 200-230/460V, 180TY	SOW, SOOW – 10/4	9K367	9K368	–
	3-Ph: 5 and 7½ HP, 575V, 180TY	SOW, SOOW – 14/4	9K363	9K364	–
	3-Ph: 1½, 2 and 3 HP, 200, 230, 460, 575V, 180TY	SOW, SOOW – 14/4	9K363	9K364	–

Control cable is AWG size 18/5 - SOW.

Model 1GD

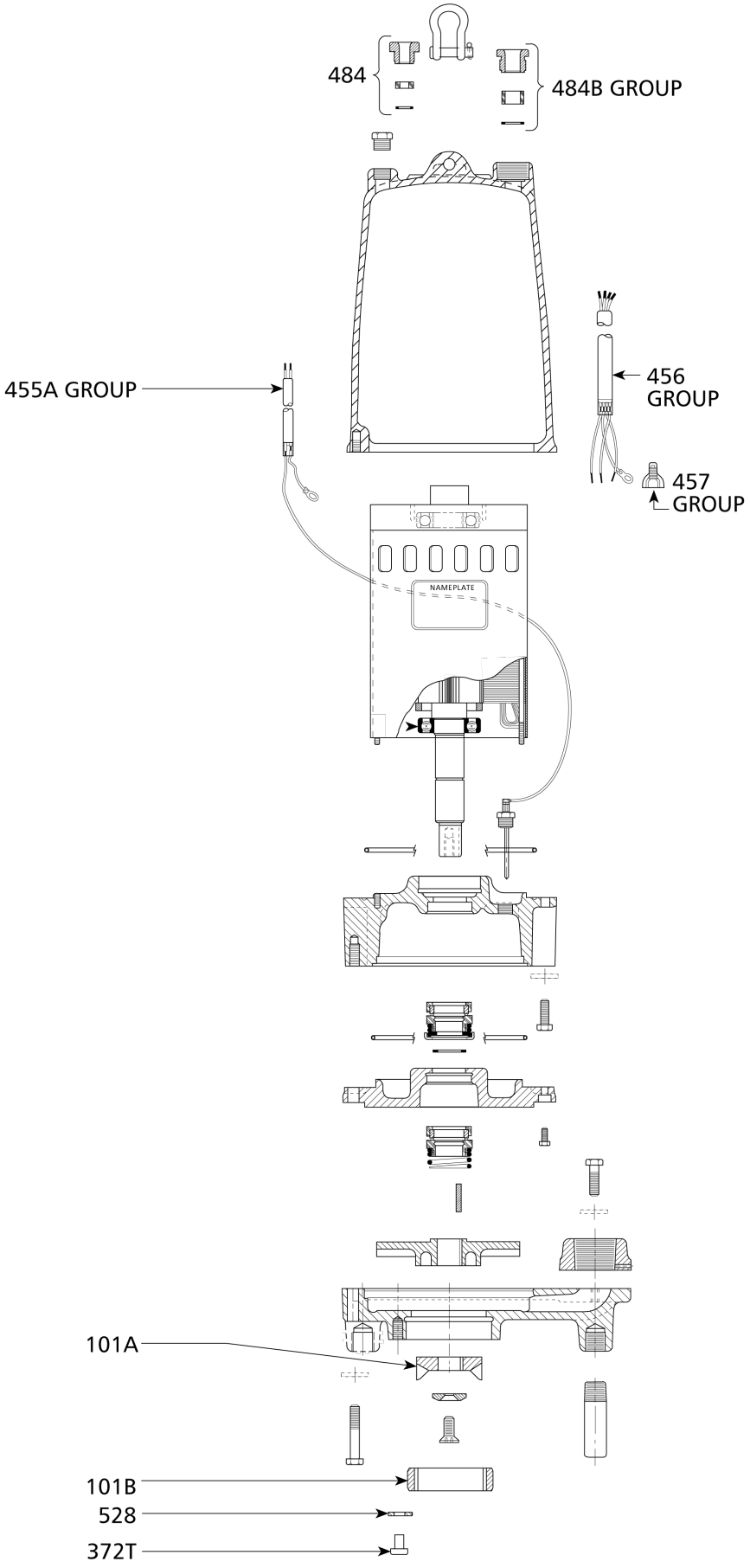
484
484B GROUP
455A GROUP
456
GROUP
457
GROUP
NAMEPLATE
101A
101B
528
372T

Model 1GD

Item no.	Part description	Quantiy required	Repair parts order number
101A/101B/ 372T/528	Cutter/cutter ring/hex cap screw-cutter ring retainer/washer-cutter ring retainer	1	1GDCUTKIT
456/457/484B	20 ft. Power cable kit-1 and 3PH:2HP,200-230/460/575V with bare leads/wire nuts/strain relief assembly	1	WWPOWKIT7
455A/457/484	20 ft. Mechanical seal sensor: optional	1	WWSENKIT1
	20 ft. Heat sensor: 3-phase only (optional)/wire nuts/strain relief assembly	1	WWSENKIT1
	20 ft. Mechanical seal/heat sensor: 3-phase only (optional)/ wire nuts/strain relief assembly	1	WWSENKIT2

Models 4NS/4XD with reliance motors

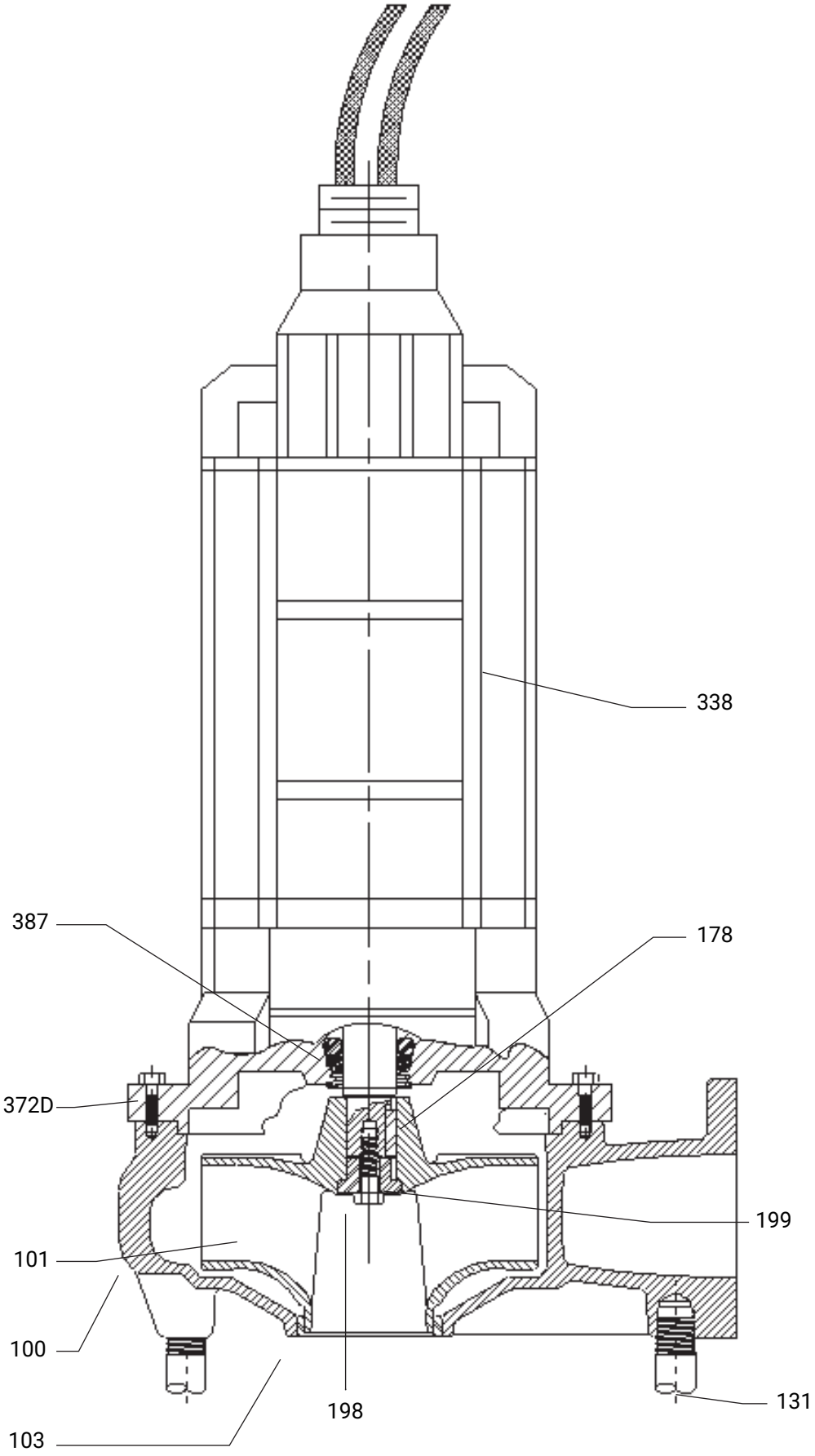

Models 4NS/4XD with reliance motors

Item no.	Part description		Material	Qty. reqd.	Repair parts order number									Max. wt. (lbs.)
					1750 RPM							1150 RPM		
					7½ HP	10 HP	15 HP	20 HP	25 HP	30 HP	40 HP	7½ HP	10 HP	
100	Casing – with wear ring		Cast iron	1	1K326									75.0
101	Impeller – 4NS/4XD		Cast iron		2K781 7½"	2K779 8"	2K776 9"	2K774 9¾"	2K772 10⅜"	2K771 10¾"	2K770 11"	2K773 10⅛"	2K770 11"	21.5-28.0
103	Casing wear ring		Bronze	1	4K264									2.0
131	Foot - standard		Steel	3	4K42 (New)									2.0
	Foot - optional		Cast iron	1 Kit	4K625									–
178	Impeller key		AISI 300 SS	1	4K392									–
198	Impeller bolt		AISI 300 SS	1	13K275									–
199	Impeller washer		AISI 300 SS	1	4K431									–
338	Motor	3-phase, 200V	Replace 279-26 with 279-27 for UL listed explosion proof motor. index suffixes are the same.	1	279-261 (210TY)	279-2611 (210TY)	279-2621 (210TY)	279-2631 (210TY)	279-2641 (250TYS)	279-2651 (250TYS)	279-2661 (250TYS)	279-2671 (210TY)	279-2681 (210TY)	**210TY** 315 lbs. Air Filled **250TYS** 750 lbs. Air Filled
		3-phase, 230V			279-262 (210TY)	279-2612 (210TY)	279-2622 (210TY)	279-2632 (210TY)	279-2642 (250TYS)	279-2652 (250TYS)	279-2662 (250TYS)	279-2672 (210TY)	279-2682 (210TY)	
		3-phase, 400V			279-263 (210TY)	279-2613 (210TY)	279-2623 (210TY)	279-2633 (210TY)	279-2643 (250TYS)	279-2653 (250TYS)	279-2663 (250TYS)	279-2673 (210TY)	279-2683 (210TY)	
		3-phase, 460V			279-264 (210TY)	279-2614 (210TY)	279-2624 (210TY)	279-2634 (210TY)	279-2644 (250TYS)	279-2654 (250TYS)	279-2664 (250TYS)	279-2674 (210TY)	279-2684 (210TY)	
		3-phase, 575V			279-265 (210TY)	279-2615 (210TY)	279-2625 (210TY)	279-2635 (210TY)	279-2645 (250TYS)	279-2655 (250TYS)	279-2665 (250TYS)	279-2675 (210TY)	279-2685 (210TY)	
372D	Hex cap screw - Casing to motor		AISI 300 SS	8	13K45									–
387	Mechanical seal – standard		Carbon/ceramic	1	10K157				10K160			10K157		–
	Mechanical seal – optional		Silicon/silicon	1	10K158				10K161			10K158		
	Mechanical seal – optional		Silicon/tungsten	1	10K159				10K162			10K159		

Power and control cap/cables for reliance motors

Type and AWG size	Standard length 25'	Optional lengths 50'	Wt. (lbs./5 ft.)
SOW, SOOW 14/4	9K423	9K431	–
SOW, SOOW 12/4	9K424	9K432	–
SOW, SOOW 10/4	9K425	9K433	–
SOW, SOOW 8/4	9K426	9K434	–
SOW, SOOW 6/4	9K427	9K435	–
SOW, SOOW 4/4	9K428	9K436	–
SOW, SOOW 2/4	9K429	9K437	–
SOW, SOOW 1/0/4	9K430	9K438	–

Control cable is AWG size 18/5 - SOW-A, SO.

Reliance	Part description	Material	Quantity	Repair no.	Motor frame	Repair no.	Motor frame
Motor repair parts	Mechanical seal kit – upper & lower	Carbon/ceramic	1 Set	10K181	210TY	10K182	250TY
	Bearing kit – upper & lower	Steel	1 Set	4K698		4K699	
	O-ring kit	BUNA-N	1 Set	5K420		5K421	

Model RGS2012

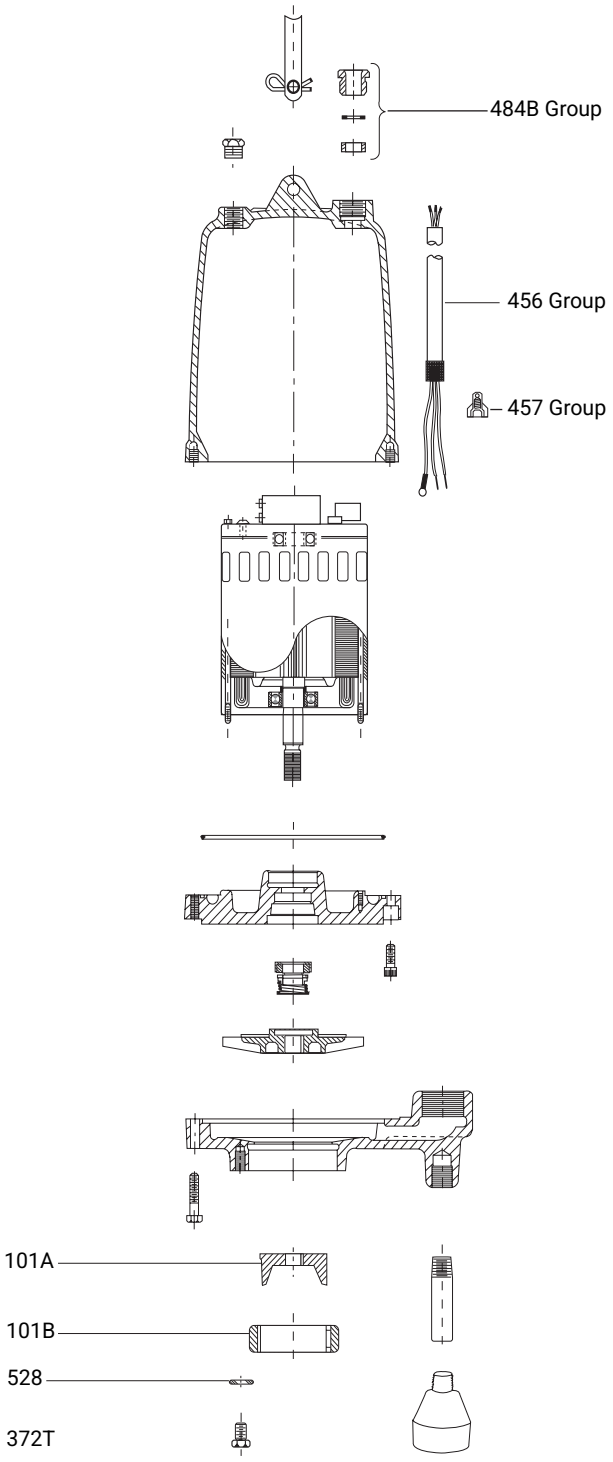

Item no.	Part name	Qty.	Repair parts order number
101A/101B/ 372T/528	Cutter ring assembly	1	RGSCUTKIT
456/457/ 484B	20 ft. Power cord assembly	1	RGSPOWKIT

Model AGS05/AGS10

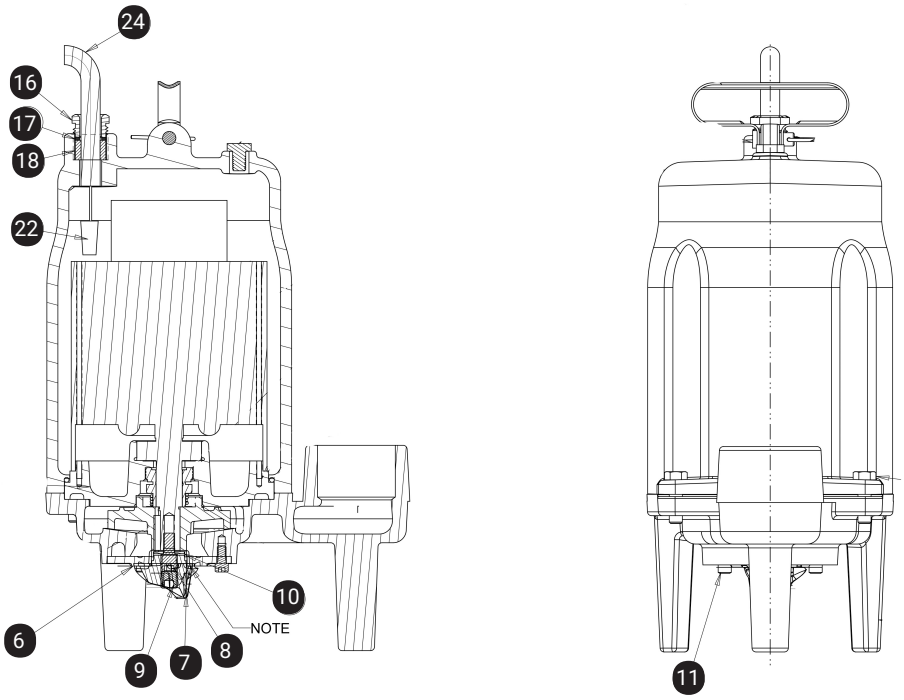

Model AGS2012

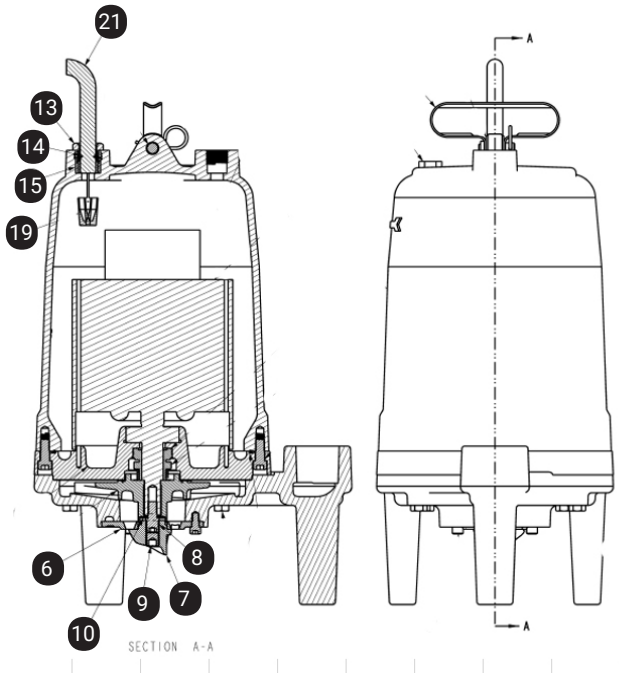

Item no.	Part description	Quantiy required	AGS0511	AGS0512	AGS1011	AGS1012	AGS2012
6/7/8/9/10/11	Cutter ring assembly	1	15L64				
(AGS05/AGS10) 16/17/18/22/24	20 ft. Power Cord assembly	1	AGSPOWKIT1	AGSPOWKIT2	AGSPOWKIT1	AGSPOWKIT2	N/A
(AGS20)13/14/ 15/19/21			N/A				AGSPOWKIT3

NOTE: 0.004" -0.006" clearance between cutter wheel and cutter ring

Models 1GA/2GA

Pump	Impeller code	Phase	Impeller	Repair kit	Inner seal	Outer seal	Cutter wheel	Cutter ring
3 HP	H	1	2K1227	5K481	10K201	10K208	4K812	4K814
3 HP	L	1	2K1228					4K818
5.4 HP	G	1	2K1229	5K482	10K202	10K207	4K813	4K817
5.4 HP	K	1	2K1230					4K816
9.4 HP	F	1	2K1460	5K480	10K204	10K205		4K1608
9.4 HP	J	1	2K1225					4K819
4 HP	C	3	2K1222	5K505	10K201	10K206	4K812	4K814
6 HP	B	3	2K1223	5K482	10K202	10K207	4K813	4K817
6 HP	E	3	2K1224					4K816
11 HP	A	3	2K1226	5K480	10K204	10K205		4K817
11 HP	D	3	2K1460					4K816

Repair Kit includes: seals, o-rings and bearings

Effluent, sewage and grinder oil volumes

Model	Oil volume - motor housing	Oil volume - seal housing
	Quarts	Quarts
3885 (WE's)	3.90	N/A
2ED's	3.90	0.40
3886 (WS—B)	3.90	N/A
3887BF (WS—BF)	3.90	N/A
3887BHF (WS–BHF)	3.90	N/A
2/3WD's	3.90	0.40
3888D3 (WS——D3)	7.00	1.70
3888V3 (WS___V3)	7.00	1.70
3SD's	7.00	1.70
3888D4 (WS——D4)	7.00	1.50
4SD's	7.00	1.50
3888D4 (WS——D4) - 7½ HP	6.00	1.50
3888V4 (WS___V4) 7 1/2 HP	6.00	1.50
4SD's - 7½ HP	6.00	1.50
RGS2012	3.90	N/A
1GD - single-phase	3.55	0.90
1GD - three-phase	3.90	0.90
AGS	3.90	N/A

Noco T-32 oil is standard.

Note: Normally a minimum of a 1" air gap at the top of the motor/seal housing should be maintained due to thermal expansion of the oil.

4K432 oil specification: 5 gallon can of ASTM 150 turbine oil
Comparable brand names:

Sunoco	Sunvis 932
Mobil	DTE Light
Texaco	Regal RandO 32
Shell	Turbo 32
Gulf	Harmony 32
Amoco	Am. Industries Oil 32
Exxon	Nuto 32
Chevron	GST 32

Please contact Customer Service for part information: Phone (866) 325-4210 or Fax (888) 322-5877 (toll free).

Notes

Xylem Inc.
2881 East Bayard Street Ext.,
Suite A
Seneca Falls, NY 13148

Phone: (866) 325-4210
Fax: (888) 322-5877
xylem.com/goulds

This information is subject to change without notice. All information presented herein is believed reliable and in accordance with accepted engineering practices. Xylem makes no warranties as to the completeness of this information. Users are responsible for evaluating individual product suitability for specific applications. Xylem assumes no liability whatsoever for any special, indirect or consequential damages arising from the sale, resale or misuse of its products.

© 2026 Xylem Inc. or its affiliate. All rights reserved. Xylem is a registered trademark of Xylem Inc. or one of its subsidiaries. Goulds Water Technology is a registered trademark of ITT Manufacturing Enterprises LLC and is used under license. All other trademarks or registered trademarks are the property of their respective owners.

RSES R22 9/2026

xylem
Let's Solve Water