xylem



McDonnell & Miller

Electronic Low Water Cut-Offs (LWCO)





McDonnell & Miller
xylem



Simplify your boiler controls with McDonnell & Miller

When it comes to boiler controls … simplicity, safety and reliability are key factors. Xylem's McDonnell & Miller brand offers all of these important factors in one of the most advanced lines of electronic low water cut-off (LWCO) controls available today. Featuring the GuardDog® RB-24SE, RB-122E, and the boilerwize® FPC-1000 models, this all-star line-up uses patented technology to protect against low water conditions, ensuring safety and reliability. These probe-type LWCO controls are backward compatible and can be used as primary or secondary protection for residential, commercial, and industrial applications.

Designed to protect hot water and steam boilers from low water conditions, these controls help prevent catastrophic outcomes like system failure, explosions, fires, and even loss of life.

Additionally, the boilerwize FPC-1000 is the first field-configurable LWCO that can operate at 24V, 120V, in auto or manual mode for both steam and hot water boilers. It's an easy replacement for almost all electronic LWCO devices on the market today, allowing you to use the FPC-1000 to cover a wide range of installations with less inventory.

So, when you're ready to do MORE with LESS, simplify with McDonnell & Miller's innovative electronic LWCO product line!

Electronic LWCO features:

- **Self-cleaning probe** – Proprietary probe-type minimizes scale build-up and extends recommended cleaning intervals to every five (5) years instead of annually.
- **Brass threads** – Metal-to-metal seal ensures a leak-free installation.
- **Wrench flats** – Allows easy and quick installation on any steam or hydronic system.
- **Universal wiring harness** – The RB-24SE features a "plug-and-play" universal wiring harness that fits most residential boilers.
- **Condition indicator**
  - FPC-1000 – Features a multi/function LED that indicates when a unit is powered on at Auto mode (green), Manual mode (yellow), and when a low water condition is detected (red) for easy visual confirmation of system status.
  - RB-24SE and RB-122E – Feature a red LED that indicates low water condition. A separate LED turns green when the unit is powered on.
- **Automatic reset** – Resumes operation after a power outage when water is on probe.
- **First field-configurable control** – Easily configure boilerwize FPC-1000 for 24V, 120V, auto or manual control for steam or hot water boilers. The FPC-1000 is also an easy replacement for almost ALL electronic LWCOs in the market today.
- **Tri-function button** - Standard offering on boilerwize FPC-1000:
  - Push-to-test – Quickly and easily test the control to make sure it's operating properly without draining the boiler.*
  - Manual reset – When configured on manual reset mode, press this button to reset the device.
  - Configuration – Easily select the desired configuration.

** Push-to-test is also a standard feature on the RB-24SE and RB-122E*

Electronic LWCO applications and features:



RB-24SE



RB-122E



FPC-1000

	RB-24SE	RB-122E	FPC-1000
Applications			
Residential	•	•	•
Commercial			•
Industrial			•
Hot water boiler	•	•	•
Steam boiler			•
Standard features			
Self-cleaning probe	•	•	•
Brass threads	•	•	•
Wrench flats	•	•	•
Easy access wiring	•	•	•
Condition indicator	•	•	•
Power on indicator	•	•	•
Automatic reset	•	•	•
Push-to-test button	•	•	•
Plug-and-play installation	•		
Tri-function button			•
Field-configurable			•
NEMA 1 general purpose electrical enclosure	•	•	•

boilerwize® FPC-1000 features:

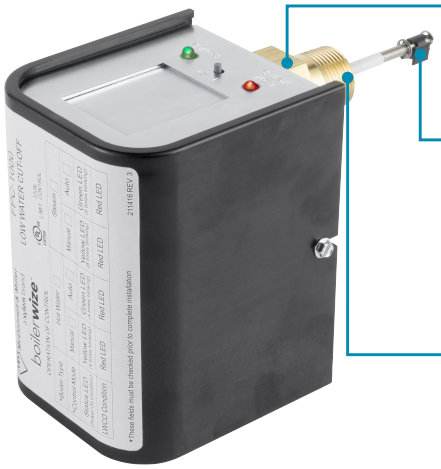

Wrench flats
Enable easy, leak-free installation. Quickly install in almost any system.

Patented self-cleaning probe
Minimizes scale build-up and extends recommended cleaning intervals to every five (5) years instead of annually.

Brass threads
Metal-to-metal seal ensures a leak-free installation.

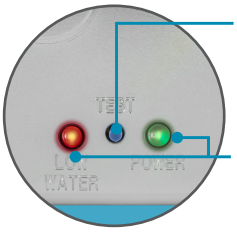

Tri-function button
In-field configuration, test and reset functions.

LED indicator
Red LED — Low water condition
Green LED — Power on (Auto)
Yellow LED — Power on (Manual)

Boiler control simplified



boilerwize FPC-1000

The industry's first-ever field-configurable low water cut-off device, boilerwize is a universal control that can be configured for any application. Combine that with McDonnell & Miller's legacy as a leader in boiler controls, and you have a device that's leading a lineup of low water cut-off devices for the modern era.

- Meets the requirements of ASME standard CSD-1.
- Probe sensitivity: 20,000 ohms (hot water)/7,500 ohms (steam)
- Maximum steam pressure: 15 psi (1.0 kg/cm^2)
- Maximum water pressure: 160 psi (11.2 kg/cm^2)
- Maximum water temperature: 250˚F (121˚C)
- Temperature:
  - Storage: -40˚F to 120˚F (-40˚C to 49˚C)
  - Ambient: 32˚F to 120˚F (0˚C to 49˚C)
- Humidity: 85% (non-condensing)

Ordering information

Model number	Part number	Description	Weight lbs. (kgs.)
FPC-1000**	144704	LWCO - without probe	2.0 (0.9)
FPC-1000-P	144705	LWCO - with standard probe ('P')	2.5 (1.1)
FPC-1000-U	144706	LWCO - with extended barrel probe ('U')	2.5 (1.1)
FPC-1000-SP	144707	LWCO - with short probe ('SP')	2.5 (1.1)
FPC-1000-RX2	144708	LWCO - with RX2 probe	2.5 (1.1)
FPC-1000-P-AS	144737	LWCO - STD probe configured for automatic reset steam application	2.5 (1.1)
FPC-1000-P-MH	144738	LWCO - STD probe configured for manual reset hot water application	2.5 (1.1)
FPC-1000-P-67	149705	FPC-1000 with standard probe and 67 adapter fitting	3.0 (1.3)

***Remote sensor must be ordered separately.*

Dimensions, in. (mm)

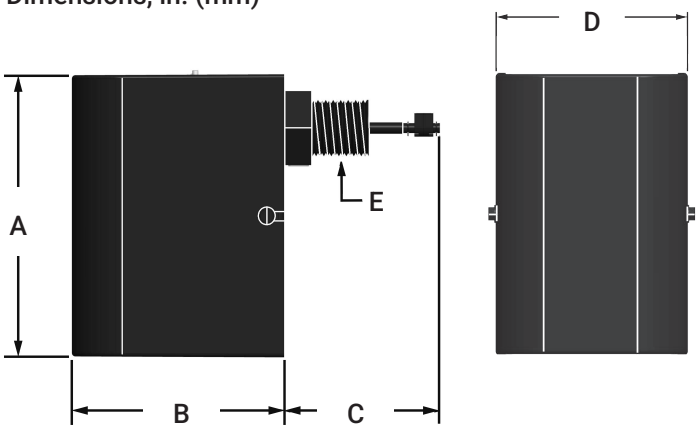

Electrical ratings

Model	Voltage	Switch rating (Amperes)		Pilot duty
		Full load	Locked rotor	
24 VAC	24 VAC	—	—	50 VA at 24 VAC
120 VAC	120 VAC	7.5	43.2	125 VA at 120 VAC 50 or 60 Hz

A	B	C***	D	E
5 1/4 (133)	4 (101)	3 23/32 (95)	3 1/8 (92)	3/4 NPT

***For FPC-1000-P



GuardDog RB-122E

This versatile electronic controller is not afraid of more demanding residential hot water boiler applications. Used as a primary cut-off for residential hot water boilers, the RB-122E is easy to install and wire. This boiler control workhorse has a test button and features automatic reset.



Ordering information

Model number	Part number	Description	Weight lbs. (kgs.)
RB-122E	144703	Low Water Cut-Off	1.7 (.8)

Electrical ratings

Voltage power	Power consumption	Load switching
120 VAC	3.1 VA	5.8 A at 120 VAC

Dimensions, in. (mm)

A	B	C	D	E
2 7/8 (72)	2 29/32 (74)	3 5/8 (92)	3/4 NPT	3 3/8 (85)

- Easy to install and wire
- No blow down required
- 20,000 ohms probe sensitivity
- Maximum ambient temperature: 120°F (49°C)
- Maximum water temperature: 250°F (121°C)
- Maximum water pressure: 160 psi (11.2 kg/cm²)

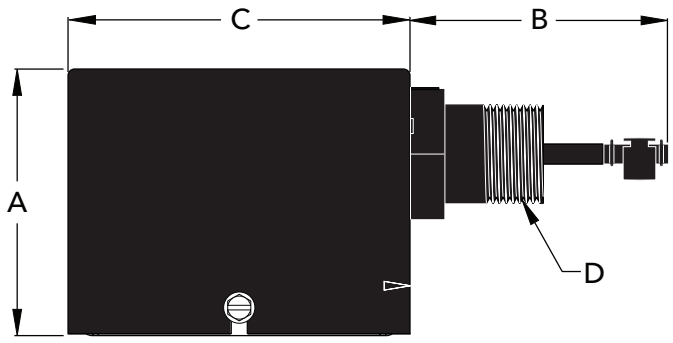

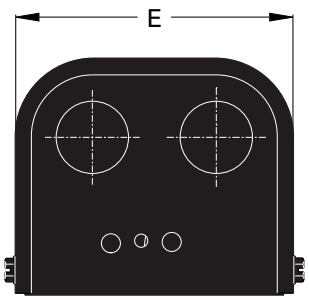





GuardDog RB-24SE

Don't let the size fool you! Smaller than standard devices, this powerful control is ideal for installations in which space is a challenge. Plug-and-play wiring harnesses are available to fit a wide range of boilers and simplify installations. The RB-24SE is designed for residential hot water boilers.

- Universal wiring harness fits 100% of today's gas boilers
- -S, -A , -L and -B models provide "plug-and-play" installation with most residential boilers
- New smaller compact size
- Easy to install and wire
- 15,000 ohms probe sensitivity
- Maximum ambient temperature: 120°F (49°C)
- Maximum water temperature: 250°F (121°C)
- Maximum water pressure of 160 psi (11 kg/cm²)

Ordering information

Model number	Part number	Description	Weight lbs. (kgs.)
RB-24SE	144701	Residential LWCO	1.2 (.5)
RB-24SE-A	144723	Residential LWCO w/vent damper harness	1.2 (.5)
RB-24SE-B	144724	Residential LWCO w/burner control harness	1.2 (.5)
RB-24SE-S	144725	Residential LWCO w/transformer plug harness	1.2 (.5)
RB-24SE-L	144726	Residential LWCO w/control panel harness	1.2 (.5)
UWH-RB-24A	144681	Replacement cable for RB-24SE-A	.8 (.4)
UHW-RB-24L	144691	Replacement cable for RB-24SE-L	.8 (.4)

Electrical ratings

Voltage power	Consumption	Load switching
24 VAC	2.5 VA	2 A at 24 VAC

Note: A 15mA minimum current draw is required.

Dimensions, in. (mm)

A	B	C	D	E
¾ NPT	1 5/32 (29.4)	1 3/32 (27.8)	4 7/16 (112.7)	2 (50.8)

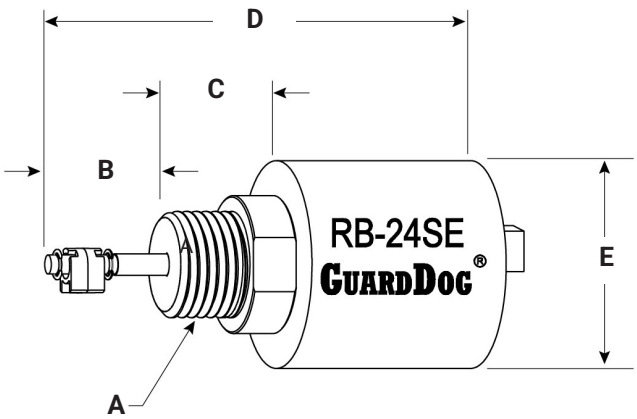

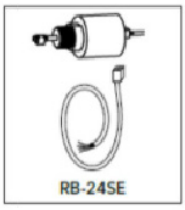





Series RS – high pressure sensors and probes for conductance actuated controls

Series RS sensors

Series-RS-X-BR-1:

- NEMA 4X enclosure
- For sophisticated multi-level control in tanks, boilers and hydronic systems
- Remote sensors, which thread into the top of the boiler or tank, are available with 1, 2, 3, 4 or 5 probes of varying lengths that can easily be cut to desired set points
- Probe lengths: 12 - 72" (305 - 1829 mm) in 12" (305 mm) increments (purchased separately)
- Control, remote sensor and probe(s) must be ordered separately. Order Spacer S-4 when 2 or more probes greater than 36" (914mm) will be used
- No blow down required
- Maximum temperature: 406°F (208°C)
- Maximum pressure: 250 psig (17.6 kg/cm^2)



High pressure remote sensor model RS-1-BR-1

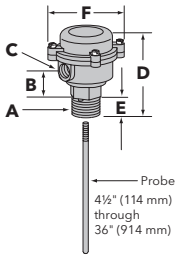



High pressure remote sensor Model RS-2-BR-1 Model RS-3-BR-1

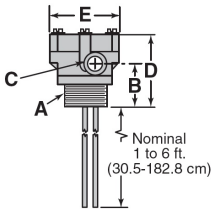



High pressure remote sensor Model RS-4-BR-1 Model RS-5-BR-1

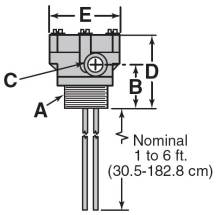

High pressure remote sensors and probes

Model number	Part number	Description	Weight lbs. (kgs.)
RS-1-BR-1	179524	Remote sensor; 1 level	1.7 (.8)
RS-2-BR-1	179525	Remote sensor; 2 levels	3.3 (1.5)
RS-3-BR-1	179526	Remote sensor; 3 levels	3.3 (1.5)
RS-4-BR-1	179527	Remote sensor; 4 levels	4.0 (1.8)
RS-5-BR-1	179528	Remote sensor; 4 levels for non-metallic tanks	4.3 (2.0)

Dimensions, in. (mm)

Remote sensor	A	B	C	D	E	F
1 Probe	1 NPT	$1\,^{11}/_{16}$ (43)	$^1/_2$ NPT	$4\,^9/_{16}$ (116)	$1\,^1/_4$ (32)	$3\,^1/_4$ (83)
2 or 3 Probes	2 NPT	$2\,^{11}/_{32}$ (59.5)	$^1/_2$ NPT	$3\,^7/_8$ (98)	4 (102)	–
4 or 5 Probes	$2\,^1/_2$ NPT	$2\,^{15}/_{32}$ (63)	$^1/_2$ NPT	4 (102)	4 (102)	–

Sensors – high pressure

Series 750B-C3 chamber
with 3 probes

Series 750B-C4 chamber
with 4 probes

Specifications chamber

- NEMA 4X chamber enclosure
- Maximum steam pressure: 250 psig (17.6 kg/cm^2)
- Designed for use with a remotely mounted controller to make a complete system for level control in a boiler or other vessel.



Remote Chamber

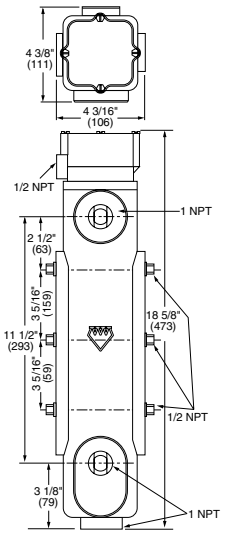

Ordering information

Model number	Part number	Description	Weight lbs. (kgs.)
750B-C3	176316	Cast iron chamber w/3 probes	26 (11.8)
750B-C4	176317	Cast iron chamber w/4 probes	26 (11.8)

Probe rods

- Stainless steel - Series 316 material
- PTFE coated probe ends provide protection from false signals [available on 24-72" (610 - 1829 mm) probes]
- For use with RS sensors

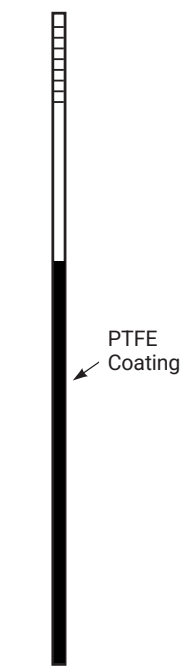

P-SS Probes



G-SS Probes

Ordering information

Model number	Part number	Description	Weight lbs. (kgs.)
G-2-SS	179156	24" (610 mm) Ground Probe	1.0 (.5)
G-3-SS	179157	36" (914 mm) Ground Probe	1.5 (.7)
G-4-SS	179158	48" (1219 mm) Ground Probe	2.0 (.9)
G-6-SS	179160	72" (1829 mm) Ground Probe	3.0 (1.4)
P-1-SS	179530	12" (305 mm) Probe	.5 (.2)
P-2-SS	179535	24" (610 mm) Probe with PTFE	1.0 (.5)
P-3-SS	179540	36" (914 mm) Probe with PTFE	1.5 (.7)
P-4-SS	179545	48" (1219 mm) Probe with PTFE	2.0 (.9)
P-5-SS	179550	60" (1524 mm) Probe with PTFE	2.5 (1.1)
P-6-SS	179555	72" (1829 mm) Probe with PTFE	3.0 (1.4)

Selecting control according to anticipated use, the sensor should be selected according to the number of probes required. The probe rods are ordered separately according to length needed. The control, sensor and each probe rod must be specified separately, using the appropriate model and part numbers.

Product cross reference chart

New model	New part number	Old model	Old part number	Hydrolevel	Taco
FPC-1000	144704	750-T-120	176206		LFA
		750-MT-120	176207		LFM
		750-MT-24	176293		
		750-T-24	176294		
FPC-1000-P	144705	PSE-801-M-120	153601		LFM
		PSE-802-M-24	153602		LFM
		PSE-801-120	153827	450, CG450	LFA
		PSE-802-24	153927	400, CG400	LFA
		751P-MT-120	176234	550, 750	
		752P-MT-24	176296	500, 700	LTA
				170, 650	LTA
				24, 600	
FPC-1000-U	144706	PSE-801-M-U-120	153603		
		PSE-802-M-U-24	153604		
		PSE-801-U-120	153828	CG450P	
		PSE-802-U-24	153928	CG400P	
		751P-MT-U-120	176214	550P	
		752P-MT-U-24	176298		
				650P	
FPC-1000-SP	144707	751P-MT-SP-120	176295	550SV, 750SV	
				170SV, 650SV	
		752P-MT-SP-24	176297	500SV, 700SV	
				24SV, 600SV	
FPC-1000-RX2	144708	PSE-802-RX2-24	153929		
RB-122E	144703	RB-122E	144676	1150	LTA
RB-24SE-L	144726	RB-24E-L	144690	1100 H5	
RB-24SE	144701	RB-24E	144692	1100	LTR
RB-24SE-S	144725	RB-24E-S	144693		
RB-24SE-A	144723	RB-24E-A	144694	1100 H7	
RB-24SE-B	144724	RB-24E-B	144696		

Frequently asked questions

What is a low water cut-off device or LWCO?
In order to avoid a heating boiler explosion or damage from loss of water, low water cut-off (LWCO) devices are intended to shut down unsafe heating equipment by turning off electrical power to the oil burner or gas burner should the water level or pressure in the heating system fall below a safe level.

How does it work?
Our newest electronic LWCO devices use a sensor instead of a mechanical float switch. Using patented technology McDonnell & Miller electronic controls monitor changes in water conductivity. When defined parameters are exceeded, the device makes a decision to turn off the burner based on the volatility/variability of the resistance readings. This patented technology provides the best protection possible without turning off the burner unless a low water condition exists. As an added measure of safety, the control will turn off the burner if it recognizes an out-of-water condition when the sensitivity threshold is exceeded.

Is a LWCO a required safety device?
The ASME boiler code recognizes the importance of protecting boilers from sudden loss of water by requiring all hot water boilers with input ratings equal to or greater than 400,000 BTU/HR to have low water fuel cut-off devices. Both the International Mechanical Code and International Residential Code, on which many local codes are based, mandate the use of low water cut-offs on all hot water and steam boilers.

Keep in mind that it is ultimately local codes and local inspectors that will make the final determination on low water cut-off requirements for your installation. Most residential hot water boilers are shipped from the boiler manufacturer without a low water cut-off device. Therefore, it's up to the contractor/installer to make the decision to install such a device. Installers will be at the mercy of their local inspector's interpretation of applicable local codes.

Where should the LWCO be mounted?
The boiler manufacturer will specify the point where they'd like to have the probe type low water cut-off inserted. There are typically two locations where the probe type low water cut-off may be inserted – inserted directly on the boiler usually just below the water line or inserted on a tee fitting above the boiler. When inserted on a tee fitting, it's also important for the probe to be positioned so the tip is far enough into the pipe to minimize the potential for it to be caught in an air pocket, but not far enough in that it contacts the pipe wall.

<table>
<tr><th>Steam boiler</th><th colspan="2">Hot water boiler</th></tr>
<tr>
<td>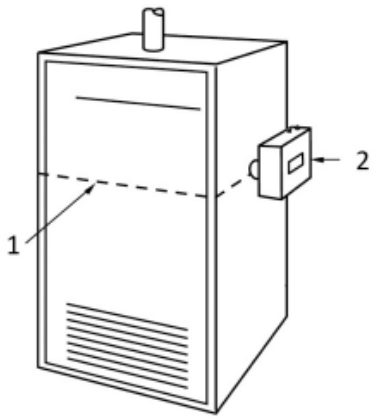

1. Minimum safe water level (May vary by boiler manufacturer)
2. Probe control</td>
<td>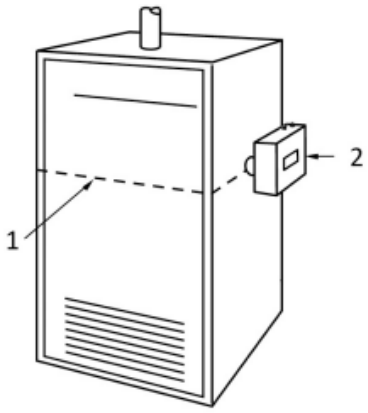

1. Minimum safe water level (May vary by boiler manufacturer)
2. Probe control</td>
<td>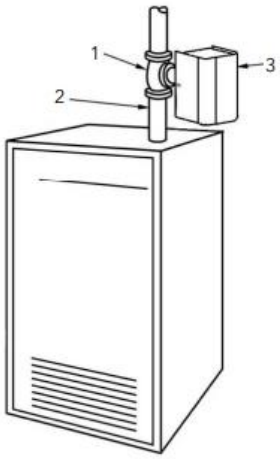

1. Tee fitting
2. Riser pipe
3. Probe control</td>
</tr>
</table>

A tradition of safety and quality

Since its inception in 1924, McDonnell & Miller has evolved into a storied brand that has left an indelible mark on the engineering and manufacturing landscape. A manufacturer of boiler controls, flow switches and liquid level controls, McDonnell & Miller is committed to continuously improving its operations and developing innovative products that advance safety in boiler applications.

McDonnell & Miller's long history of quality performance is evident in its portfolio of safety devices, including its proprietary electronic low water cut-off solutions.



GuardDog RB-24SE



boilerwize FPC-1000



GuardDog RB-122E



Learn more about our full line of Low Water Cut-Off products

Xylem Product Cybersecurity:
Xylem values your system security and the availability of your critical services. For more information on Xylem cybersecurity practices or to contact the cybersecurity team please visit xylem.com/security.

Xylem Inc.
8200 N. Austin Avenue
Morton Grove, Illinois 60053

Phone: (847) 966-3700
Fax: (847) 965-8379
xylem.com/mcdonnellmiller

Subject to change without notice. All information presented herein is believed reliable and in accordance with accepted engineering practices. Xylem makes no warranties as to the completeness of this information. Users are responsible for evaluating individual product suitability for specific applications. Xylem assumes no liability whatsoever for any special, indirect or consequential damages arising from the sale, resale or misuse of its products.

© 2026 Xylem Inc. or its affiliates. All rights reserved. Xylem, McDonnell & Miller, boilerwize and GuardDog are registered trademarks of Xylem Inc. or one of its subsidiaries. All other trademarks or registered trademarks are the property of their respective owners.

xylem
Let's Solve Water

MM-ELWCO-120085 R5 10/2026