GOULDS WATER TECHNOLOGY
xylem

Technical brochure
B2DW R6



2DW

Submersible dewatering pump

xylem
Let's Solve Water

Description

The 2DW Series is a stainless steel dewatering pump that handles virtually any solid that moves through its screened inlet. The durable bottom suction design is ideal for applications from which large volumes of water need to be removed. The 2" NPSM discharge can be adjusted for both vertical and horizontal orientations. Easily transported, this “Complete. Reliable. Blue.” pump is great for effectively removing unwanted fluids in areas like construction sites or flooded areas.

Features

Impeller: Polyurethane for wear and corrosion resistance.

Adjustable discharge: Discharge can be installed for either vertical or horizontal installation using only 2 screws.

Diffuser: Polyurethane for wear and corrosion resistance.

Mechanical seal: Dual seals for double leakage protection, outer seal to silicon carbide.

Rubber liner: Protects against wear around impeller.

Bottom strainer: Made of impact absorbing EPDM rubber, suction holes allow for low pump down.

Warranty: Three (3) year standard/(four (4) year GPDA)

Applications

Specifically designed to remove water from: building excavation drainage, drainage ditches, trenches, basements and manholes.



Residential **Light commercial** **Industrial**

Specifications

Pump:

- **Discharge size:** 2" NPSM threaded hose coupling design (can be rotated)
- **Capacities:** up to 84 GPM (18.85 m³/h)
- **Total heads:** up to 51 feet (15.54m)
- Maximum solids: any particles passing through strainer
- **Mechanical seals:**
  - **Outer seal:** silicon carbide
  - **Inner seal:** carbon ceramic
- **Temperature limit:** 95ºF (35ºC) maximum
- **Depth of immersion:** 16.5 feet (5m) maximum

Motor:

- **Single-phase:** 3500 RPM, 1/2 HP and 1 HP, 115V, 60 Hz
- **Starter:** Built-in starter with full overload and temperature protection
- **Insulation:** Class F
- **Ball bearing:** Upper and lower heavy duty construction
- **Power cord:** 50 feet (15.24m)
- Air filled design

Agency listings

Tested to UL778 and CSA 22.2 108 standards by Canadian Standards Association.
NRTL File #LR13533

Performance curves

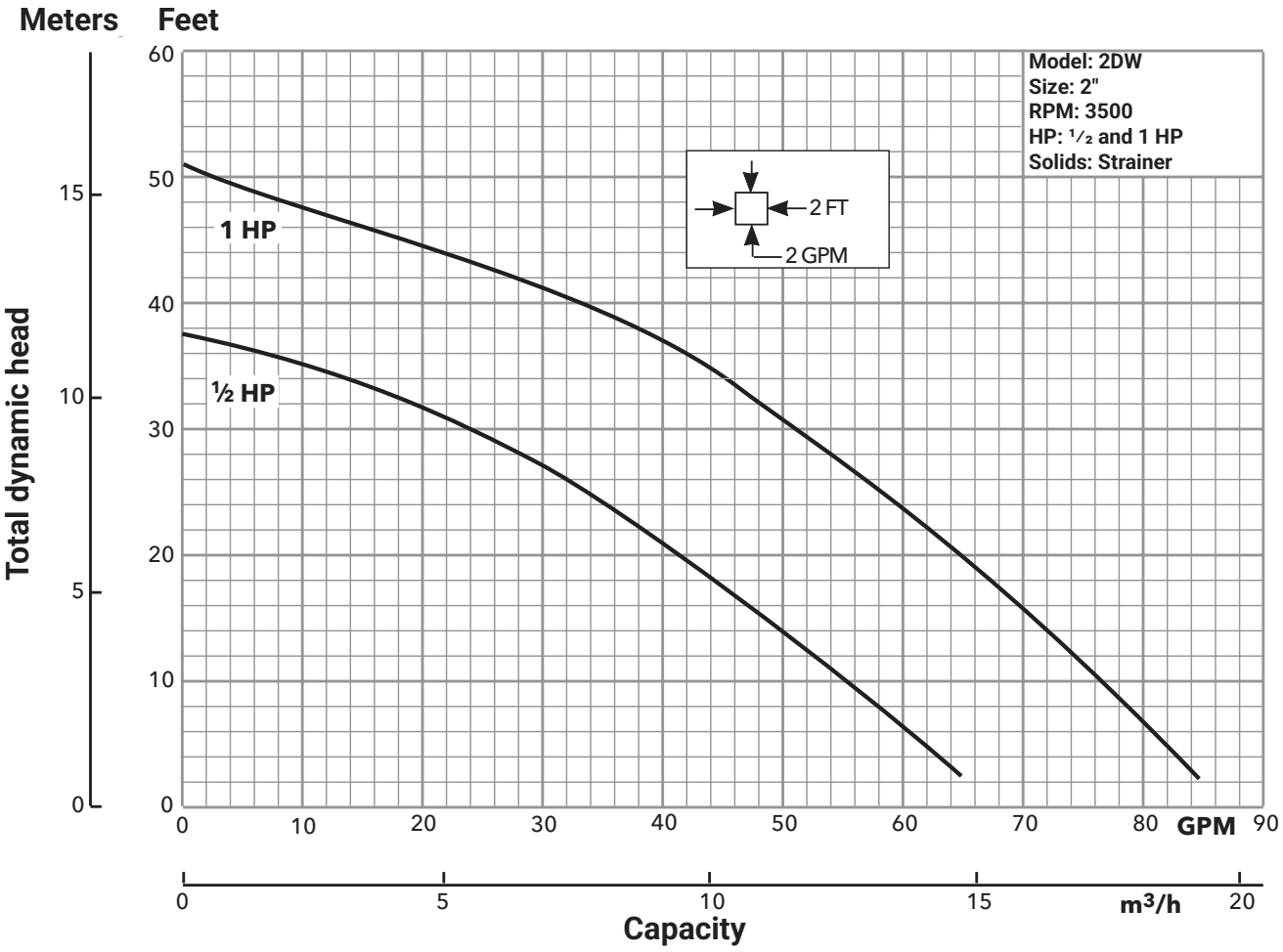

Model information

Order no.	HP	Volts	Phase	Maximum amp	RPM	Height in. (mm.)	Weight lbs. (kgs.)
2DW0511	½	115	1	5.5	3500	17.25 (438.15)	26 (11.8)
2DW1011	1			9.8			32 (14.5)

Dimensions

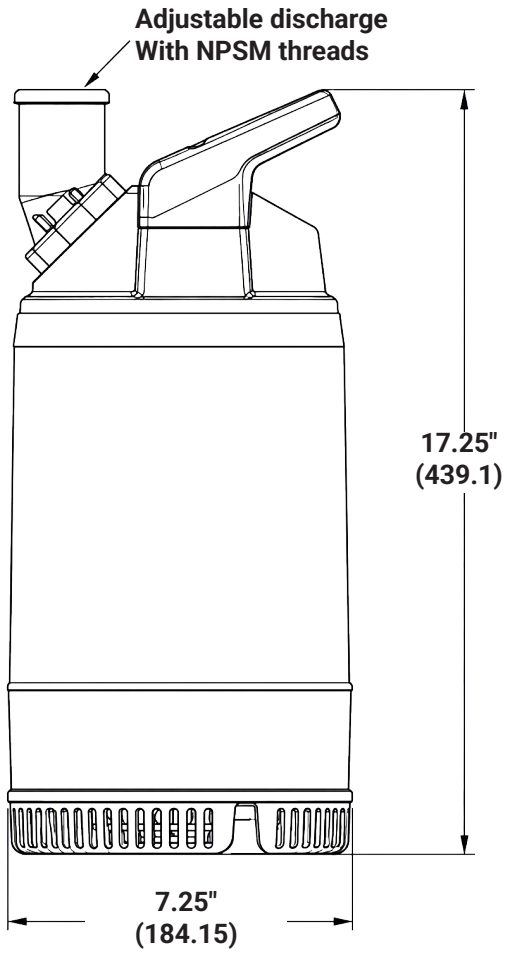

(All dimensions are in inches (millimeters). Do not use for construction purposes.)

Components

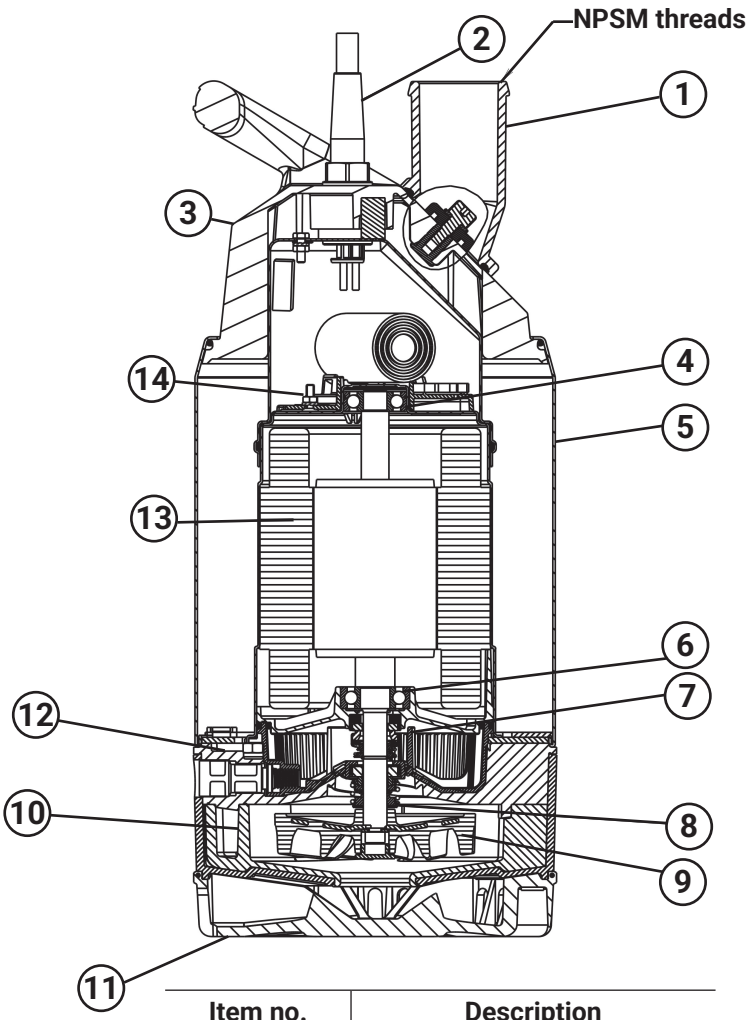

Item no.	Description
1	Discharge
2	Power cord
3	Handle/cover
4	Support bearing
5	Pump casing
6	Main bearing
7	Inner mechanical seal
8	Outer mechanical seal
9	Impeller
10	Suction cover/diffuser
11	Strainer
12	Oil plug
13,14	Motor

BUILT IN THE USA
ENGINEERED, ASSEMBLED & TESTED

Learn more about 2DW pumps

Xylem Inc. **xylem.com/goulds**

This information is subject to change without notice. All information presented herein is believed reliable and in accordance with accepted engineering practices. Xylem makes no warranties as to the completeness of this information. Users are responsible for evaluating individual product suitability for specific applications. Xylem assumes no liability whatsoever for any special, indirect or consequential damages arising from the sale, resale or misuse of its products.

© 2026 Xylem Inc. or its affiliates. All rights reserved. Xylem is a registered trademark of Xylem Inc. or one of its subsidiaries. Goulds Water Technology is a registered trademark of ITT Manufacturing Enterprises LLC and is used under license. All other trademarks or registered trademarks are the property of their respective owners.

B2DW R6 10/2026

xylem
Let's Solve Water