

SX RANGE

SPECTRA 3 ELC TOUCH

INSTALLATION, OPERATION & MAINTENANCE MANUAL

Document History:

Issue	Creation Date	Created By
1	07/12/2020	James Ellis
2	11/10/2022	James Ellis

Manual Contents

SX RANGE MANUAL 1

Document History: 2

Manual Contents 3

Health & Safety 6

Health and Safety Information 6

Introduction 8

An Introduction to UV Disinfection Systems 8

What is Ultraviolet (UV) Light? 8

How does UV Disinfection Work? 8

Safety Advantages of Evoqua UV Technology Disinfection 8

Terminology 9

Installation Guidelines 11

General Installation Guidelines 11

UV Chamber 11

UV Control Panel Installation Guidelines 16

SX Installation, Commissioning and Calibration 17

Specific Installation Guidelines 17

Environmental Conditions 17

Cable Recommendations 18

Panel Supply Loads 20

Installation Checklists 21

Commissioning 23

Commissioning Procedure Checklist 23

UV Commission Work Sheet 25

UV Sensor Calibration 26

SX Maintenance & Spares 27

Maintenance Schedule 27

Maintenance Log 27

Performance Monitoring 27

UV Lamp 27

Quartz Cleaning and Replacement 27

Seals 27

Control panel 27

Twist-lok System Maintenance 28

UV Sensor Maintenance 30

Wiper System Maintenance 33
Spare Parts 39
General Assembly 39
Quartz & Lamp Assembly 40
FUV Sensor Housing Assembly 41
UV Sensor Quartz Assembly 42
Automatic Wiper Drive Assembly (Non-Bearing Housing) 43
Automatic Wiper Drive Assembly (Bearing housing) 44
Automatic Wiper Carriage Assembly (Single-Lamp System) 45
Automatic Wiper Carriage Assembly (Multi-Lamp System) 46
Maintenance Spares List 47
ATUV-1040 Automatic Quartz Wiping System 49
General Operation 49
LED Indicators & Push Buttons 49
Connection Diagrams 50
DIP-Switch Settings 51
Calibration 52
Run 52
Service Position 52
TroubleShooting 53
Maintenance Advice 54
Spectra 3 Touch Operation V2 55
Spectra Touch Control System 55
Components 55
Start-up Sequence 69
Spectra Touch Operation 70
Navigating the Main Information Screens 70
Fault Screens 74
Wiper Screen 76
Changing Variables 77
Setup Menu Screens 78
Setup Menu - Parameter Descriptions 79
Integration 93
Analogue Inputs 93
Analogue Outputs 93
Digital Inputs 94
Remote Start/Stop 94
External Low Power Switching 94

Digital Outputs 96
Open Valve 96
Bleed Valve 96
MODBUS Communication 97
Introduction 97
Supported Interface 97
Physical Connection 98
Data Transmission 100
Message Structure 102
Data Storage 104
Full Register Map 104
Trouble Shooting 111
120

Health and Safety Information

Only suitably qualified personnel should operate/maintain the system - always follow safe working practices and do **NOT** take risks.
If in doubt always **ASK**, or for further information visit our website: www.Evoqua.com

	**All personnel involved in the installation, maintenance and operation of the UV system should read the relevant manual.**
	**Electrical Safety** **WARNING: Always ensure electrical plant or equipment is isolated before carrying out maintenance.**
	**Electrical Ground / Earth** **WARNING: All equipment must be Grounded / Earthed.**
	**Hot Temperature** **CAUTION: Chamber can be hot.** **Allow 15 minutes for lamps and other components to cool down before removal.**
	**Process Isolation - Fluid** **WARNING: Always fully isolate the system from the process before carrying out maintenance.** **DANGER: Failure to follow the correct procedures can cause serious injury or death due to forcible ejection of materials from the UV chamber.**
	**Process Isolation - Wiper** **CAUTION: Contact with moving parts can cause injury, for example trap fingers, clothing may become caught in moving parts of machinery, drawing in operatives.**
	**Ultraviolet Light** **WARNING: Do not expose skin or eyes to ultraviolet light.** **CAUTION: Do not touch lamps immediately after operation. Allow 15 minutes for lamps and other components to cool down.**

	**Quartz Components** **CAUTION: Handle quartz components with care to avoid breakages.**
	**Mercury - Lamp Breakage** **CAUTION: Lamps contain Mercury take care to avoid breakages. If a breakage occurs follow mercury spillage procedure below.**
	**Lamp Recycling** **Always recycle UV lamps properly and safely.**

Mercury Spillage	
Anticipate this event by collecting together a spill kit. Spill kits are commercially available; however most contain the following components:	1. Latex barrier gloves 2. Sealable plastic bag 3. Soft cloth, or cardboard rectangle 4. Syringe or pipette 5. Small brush, barrier foam or duct tape 6. Powdered Sulphur.
Mercury spillage procedure:	1. Put on Latex gloves 2. Collect quartz pieces, place in cloth in sealed bag. Mark bag as “sharp hazard” 3. Locate mercury ball. Use brush to aggregate smaller balls into large ball 4. Use syringe to draw up mercury bead. Transfer mercury onto paper towel, place inside sealed bag. Mark bag as “mercury hazard” 5. Use barrier foam or duct tape to collect remains of mercury - dispose of as detailed in point 4. 6. Consult site regulations regarding notification of a mercury spill. A UV lamp contains a maximum of 300 mg of mercury 7. Powdered Sulphur is optional - it can make collection of very small mercury balls easier.

Introduction

An Introduction to UV Disinfection Systems

Unlike chemical approaches to water disinfection, Ultra Violet (UV) light provides a rapid and effective method to disinfect water and other liquids.

What is Ultraviolet (UV) Light?

UV light is a form of light that is invisible to the human eye, and is classed as a non-ionising (or non-radioactive) radiation. It occupies the portion of the electromagnetic spectrum between X-rays and visible light.

How does UV Disinfection Work?

A unique characteristic of UV light is that a specific range of its wavelengths (those between 200 and 300 nm [billionths of a metre]) are categorized as germicidal – meaning that UV light damages the DNA and RNA of microorganisms and prevents them from causing infection. This capability has allowed widespread adoption of UV light as an environmentally friendly, chemical-free, and highly effective way to disinfect liquids.

Safety Advantages of Evoqua UV Technology Disinfection

- UV is a chemical-free process that adds nothing to the water except UV light.
- UV requires no transportation, storage or handling of toxic or corrosive chemicals – a safety benefit for plant operators and the surrounding community.
- UV treatment creates no carcinogenic disinfection by-products that could adversely affect the quality of the treated water.
- UV is highly effective at inactivating a broad range of microorganisms including chlorine-resistant pathogens like Cryptosporidium and Giardia.
- UV can be used (alone or in conjunction with hydrogen peroxide) to break down toxic chemical contaminants while at the same time performing disinfection of the treated water.

Evoqua UV Technology Disinfection Systems

The main features of the Evoqua UV system are:

- UV Reactor: stainless steel reactor inside which water is exposed to UV light for disinfection.
- UV Lamps: emit high-intensity UV light; housed inside chamber and protected by quartz sleeve.
- Control Panel: contains electronics for system; controlled through user interface on outside.
- Wiper: motorised system used to clean lamp sleeves.
- UV Sensor: monitors UV intensity inside chamber and feeds readings back to control panel.
- Temperature Sensor: monitors temperature of reactor to protect people and equipment if the water flow is interrupted unexpectedly.
- Note: not all systems are fitted with Wiper, UV Sensor and Temperature Sensor.

Terminology

The following terminology is used throughout this Manual:

Term	Description
Control Panel	Contains control and power electronics for UV system
ATUV-1220	I/O module
AT-463	4-20mA UV sensor used to measure the UV intensity and so report on the performance of the system.
AT-900	4-20mA Validated UV Sensor
Bank	The term used to describe 2 lamps running in series powered by a single power supply
Isolator (MCCB)	Disconnects system from power supply
MCB	Miniature circuit breaker
Electronic Ballast	Power supply used to control the starting voltage of the UV lamp and regulate the operating current
Wiper	Cleaning system for UV Lamp sleeves; may be manual or automatic
Spectra	Electronic control systems used for monitoring and control of UV treatment
UV Sensor	Component for continuous measurement of the UV-C intensity inside the reactor
UV Reactor	Comprising a single chamber in which water is treated by UV irradiation, and the associated inlet and outlet valves, components and instruments
Restrike Timer	Timer used by the control system to allow the lamps to cool after stopping, during this time the lamps are inhibited from starting
Start-up Mode	Period between switch on of the UV system and running mode

Term	Description
Running Mode	When all lamps are struck and the dose reading has exceeded the minimum Dose level
Lamp Power	Electrical Power rating of UV Lamp
Dose	Calculation of the amount of UV treatment the water is receiving, based on UV intensity and flow rate
UV Intensity	A measurement of the strength of the Ultraviolet (UV) radiation given off from the UV lamps
UVC	A region in the electromagnetic spectrum. Wavelength range 200-280 nm
UVT	Ultraviolet transmissivity of the water undergoing treatment
Validated	Certified envelope of operation of UV Reactor, comprising for example flow, UVT

Installation Guidelines

General Installation Guidelines

The guidelines in this section are designed to assist in the installation of an Ultraviolet Disinfection system into a typical plant. The recommendations below are **NOT** definitive. Depending on the installation, it may be necessary to install contrary to specific recommendations. If at any stage you are unsure as to any aspect of these instructions, consult with a specialist installation contractor. Please also make use of the Installation and Commissioning Checklists later in this manual section.

Please be aware:

- The manufacturer cannot accept responsibility for any installation carried out by other parties.
- When planning or executing any installation ensure all local Health & Safety Regulations are followed, local codes complied with and implement all appropriate risk assessments.
- Always allow a footprint around the chamber and control panel to allow safe work and access.

UV Chamber

Location of UV Chamber – Process Considerations

1. Unless there are other process considerations the UV unit should be located as close to the point of use as possible.
2. The UV system is normally installed after all other physical or conventional water treatment equipment (filters, softeners, de-mineralization etc.). The effectiveness of UV treatment is dependent upon water clarity and removal of the majority of suspended solids will reduce fouling of quartz sleeves and thimbles. However, for certain process requirements and considerations, the UV unit may need to be installed 'up front' and before some or all of the treatment equipment.
3. If chemical dosing is utilized to provide a residual, this should be installed downstream of the UV chamber. This will reduce chemical reduction by the UV system and will prolong the chamber life.

Location of UV Chamber – Mechanical Considerations

1. Allow sufficient room for removal and replacement of lamps, quartz sleeves / thimbles and wiper components (where fitted).
2. Ensure the UV Chamber location does not prevent safe maintenance of existing equipment.
3. Ensure that all equipment and pipe work will be adequately supported when installed. The UV chamber should not be used to support the pipe work, or else this may damage the UV chamber.
4. Avoid locating chambers and panels under dripping pipe work or chemical equipment and avoid storing chemicals that can lead to corrosion of system components, close to the UV equipment.
5. To minimize flow interruption and where process considerations allow it, a by-pass should be installed around the UV chamber.
6. Plan a drainage route for the equipment to the plant room main drain. It is good practice to install lockable ball valves on the drain and vent to aid maintenance.
7. The preferred material for the connecting pipework is stainless steel (either 304 or 316L grade), although straight pipe sections of uPVC may be connected direct onto the UV chamber, provided they are a minimum Class 'E' (BS 3505). These materials should be used for a minimum straight section of 1000 mm, if the pipe is 6" or greater in diameter. If the pipe is less than 6" in diameter a minimum straight section of 500 mm should be used. ABS should not be used. If plastic pipe is used, the same size connection should be used for the connecting pipework. **Reducing pipework connection size directly onto the UV chamber is not recommended!**
8. If the pipe is 6" or greater in diameter, any elbows within 1000 mm of the UV chamber must be stainless steel. If the pipe is less than 6" in diameter, any elbows within 500 mm of the UV chamber must be stainless steel
9. If the pipe is 6" or greater in diameter, any valves within 1000 mm of the UV chamber should have a stainless-steel disc (or other metal) and should not coated with a polymer material. If the pipe is less than 6" in diameter, any valves within 500 mm of the UV chamber should have a stainless-steel disc (or other metal) and should not be coated with a polymer material.
10. Do not install in direct sunlight and protect from extremes of environment (Weather, High Humidity, High or Low Temperatures).
11. Where cable lengths exceed the distance between the control panel and UV chamber, ensure these are not coiled as this could create un-wanted noise on the signal cables, and in the case of lamp cables, a voltage drop may result. Please contact Evoqua UV for further information.

Location of UV Chamber – Airlocks/ Water Hammer

1. Install the pipe work in such a way that the UV Chamber always remains flooded. If the chamber drains down, the mechanical shock when full flow is regained may damage the quartz components
2. If it is not possible to ensure the chamber remains flooded due to its location, air release and check valves can prevent emptying and draining of the system. Discuss this with your installer
3. The chamber should not be allowed to drain when not in use as this can damage internal components
4. Avoid excessive water hammer as this can damage quartz components. Avoid locating the chamber close to the outlet side of a pump. If this is unavoidable, installing a 'soft start' on the pump can reduce the chance of quartz breakages
5. On installations where the chamber and / or pipe work cannot remain flooded, a bypass should be installed where it can be easily operated. This should be opened when flow is restarted otherwise lamp and quartz breakage may occur. (Flow restarting can mean the pump starting, a backwash cycle or movement of another valve).

Location of UV Chamber – Special Considerations for Drinking Water Treatment Plants

1. As per the UVDGM guidelines, it is a requirement for all Validated systems to install a straight piece of pipe with a minimum of 5 pipe diameters upstream of the chamber to ensure good flow characteristics through the chamber, as shown in the example installation diagrams on the following page.

Chamber Orientation

1. Ensure the temperature probe (if fitted) is located on the top of the UV system.
2. Ensure the air vent (if fitted) is located on top of the UV system.
3. Install the system so that both the temperature probe and the UV monitor can be installed and maintained.
4. Ensure the lamps and sleeves can be removed, and service access is considered for the UV system and adjacent equipment.
5. UV lamps should be installed horizontally for both vertical pipe and horizontal pipe configurations, unless otherwise specified.

Cross Flow Chamber Installation Example

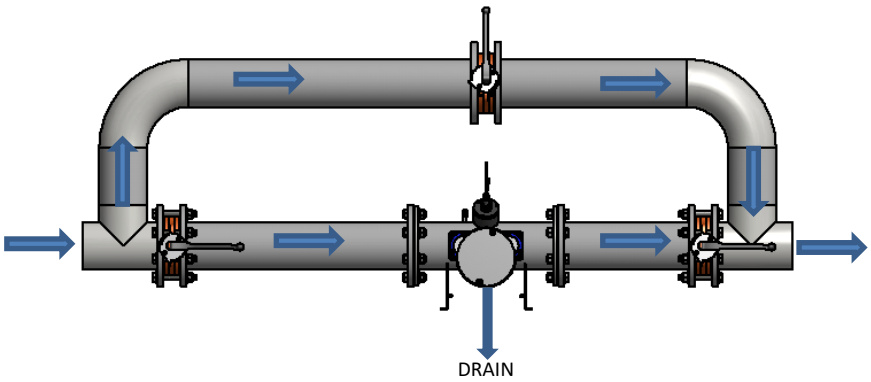

Note: Chamber can be positioned vertically ensuring the lamps remain horizontal

Axial Flow Chamber Installation Example

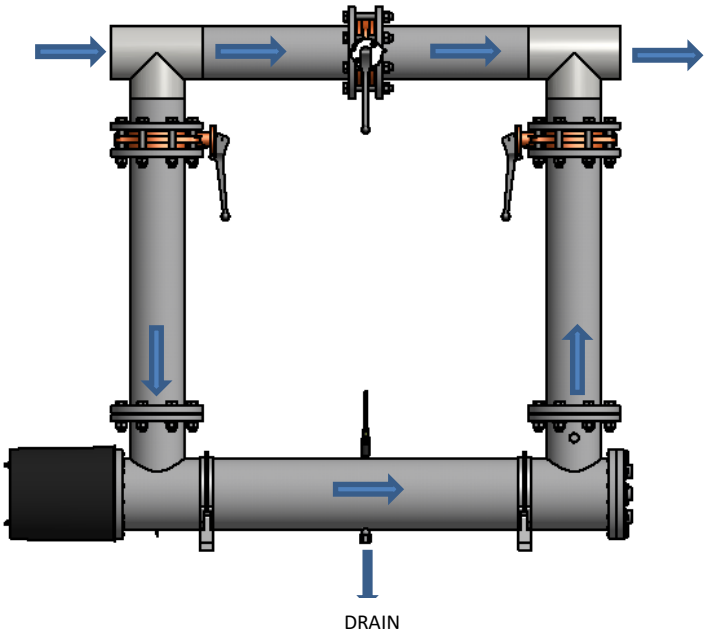

Temporary Basket Strainer Installation (Optional)

1. These should be located after the UV unit. Where the temporary basket strainer is of a larger micron rating than the upstream filtration then regular access to the strainer should not be required. However the strainer should be accessible if necessary.
2. We recommend installing this device after the UV system in a spool piece, which can be removed for maintenance in the orientation shown in the diagram below. If the UV chamber is mounted in a vertical section of pipe work, it is recommended that a point of access be provided to the pipe section below the chamber, in order to remove any quartz shards which have dropped through it.

Diagram of Strainer Installation

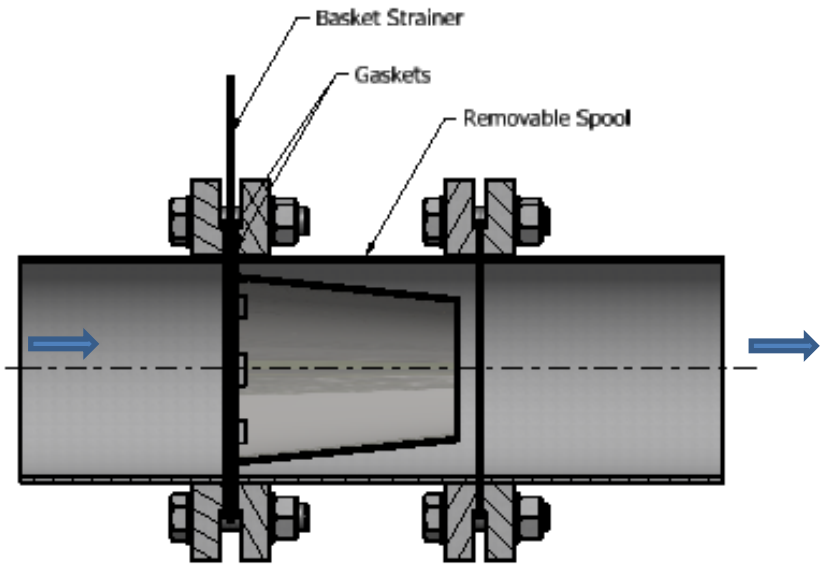

UV Control Panel Installation Guidelines

1. Complete the Installation and Commissioning Checklists later in this manual section to ensure proper installation and safe work.
2. Locate the panel as close as possible to the chamber

Note: The control panels vary in size & weight (<100kg), recommended 2-person handling (lifting) when moving or installing the control panel. Lifting eyes to be used where provided.

3. Ensure that the floor/wall structure is able to withstand the weight of the enclosure. For wall mounted panels, secure the enclosures to the mounting surface with hardware as appropriate for the application used using the 4 x mounting lugs provided.
4. Ensure the correct supply is available on site and the correct supply cable is used. If the correct voltage is not available, a Step Up / Step Down transformer may be needed - please contact your supplier for details.
5. Ensure the correct circuit breaker size and type is available for the unit (see the Cable Recommendations subsection of this manual). If the suggested breaker is installed, then sufficient discrimination should be ensured.
6. Ensure that the UV chamber and the control panel are correctly earthed / grounded – an Earth / Ground point and cable is fitted & supplied to all UV chambers.
7. The panel must be firmly mounted against a vibration free wall or suitable supporting frame.
8. Ensure panel fans (if fitted) are not obstructed. It is recommended to change or clean the filter media once construction on a project has finished.
9. Do not install in direct sunlight and protect from extremes of environment (Weather, High Humidity, High or Low Temperatures).
10. Install control panel display at eye level.
11. Do not locate the control panel in areas where it may be subjected to chemical or water leaks.
12. If the panel is floor mounted ensure that the panel is not located in a potential flood area.
13. Ensure the correct control panel is matched with the appropriate chamber. The chamber can be identified by an engraved serial number located on a fixed flange of the chamber. The panel can be identified by the label on the inside the door. These two codes should match exactly (e.g. C12345-A).
14. For lamp cables that require earthing, ensure the cable braiding has been screened or exposed and connected/clamped into each lamp earth terminal/busbar (if provided). Refer to images below.

NOTE: For cables being clamped onto the busbar using the shield connection clamps provided, ensure the maximum torque does not exceed 0.6Nm.

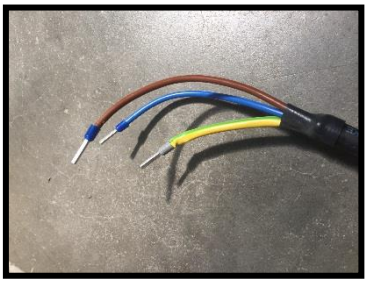

Screened Lamp Cable (for connecting into Terminals)



Screened Lamp Cable (for Clamping on Busbar)

SX Installation, Commissioning and Calibration

Specific Installation Guidelines

Environmental Conditions

Unless otherwise agreed the following environmental conditions should be met:

Condition	Range
Ambient Temperature	0 – 45 °C (32 – 113 °F)
Relative Humidity	< 90%

Cable Recommendations

Below are recommendations for a cable/circuit breaker:

- Un-bunched installed in trunking/cable tray
- Installed in an ambient temperature of 0…45ºC
- Installed as close to the control panel as possible

If there are any other specifications that are in place that does not meet this criteria, please contact Evoqua UV for further information.

Model	No. of Lamps	Lamp Power	Cable to Panel from Distribution	Breaker in Distribution Panel
SX-115-4	1	1.5kW	2.5mm^{2}c.s.a., 600/1000V, 3-Core cable (L, N & E) Steel Wire Armour Cable with Weatherproof Gland	20Amp Type “D” Circuit Breaker
SX-215-6	2	1.5kW	4.0mm^{2}c.s.a. , 600/1000V, 3-Core cable (L, N & E) Steel Wire Armour Cable with Weatherproof Gland	30Amp Type “D” Circuit Breaker
SX-225-8	2	2.5kW	6.0mm2c.s.a.,600/1000V, **Neutral not required**: 4-Core cable (3ph,E)	32Amp Type “D” Miniature Circuit Breaker
SX-425-10	4	2.5kW	6.0mm2c.s.a.,600/1000V, **Neutral not required**: 4-Core cable (3ph,E)	40Amp Type “D” Miniature Circuit Breaker

Model	No. of Lamps	Lamp Power	Cable to Panel from Distribution	Breaker in Distribution Panel
SX-635-16	6	3.5kW	6.0mm2c.s.a. (4AWG),600/1000V, **Neutral not required**: 4-Core cable (3ph,E)	63Amp Type “D” Miniature Circuit Breaker
SX-850-20	8	5.0kW	16.0mm2c.s.a. (4AWG),600/1000V, **Neutral not required**: 4-Core cable (3ph,E)	100Amp Type “D” Miniature Circuit Breaker
SX-1250-30	12	5.0kW	16.0mm2c.s.a. (4AWG),600/1000V, **Neutral not required**: 4-Core cable (3ph,E)	(site specific upon design)
SX-1873-30	18	7.3kW	35.0mm2c.s.a. (4AWG),600/1000V, **Neutral not required**: 4-Core cable (3ph,E)	(site specific upon design)

WARNING! Always ensure cables are installed with adequate mechanical protection!

Disclaimer: These cable recommendations are sized based on the maximum load of the system, therefore fault protection/discrimination should be assessed depending on the site installation and local regulations. **Evoqua UV Technology** is not responsible for any unsafe work practices, procedures, actions or inactions taken by the client during the installation.

Panel Supply Loads

Please refer to table below for approximate supply loads for each model.

Model	No. of Lamp Drivers	Lamp			Supply Loads								
		Power (W)	Nominal Voltage (V)	Nominal Current (A)	200V	208V	220V	230V	240V	380V	400V	415V	480V
SX-115-4	1	1500	160	7.5	9A	8A	8A	8A	7A	6A	5A	5A	4.5A
SX-215-6	1*	1500	160	7.5	17A	16A	15A	15A	14A	11A	9.5A	8.5A	8A
SX-225-8	2	2500	330	7.5	N/A					16A	14A	13A	12A
SX-425-10	4	2500	330	7.5	N/A					23A	20A	19A	17A
SX-635-16	3*	3500	750	9.7	N/A					39A	37A	34A	31A
SX-850-20	4*	5000	660	8.6	N/A					83A	79A	72A	66A
SX-1250-20	6*	5000	500	10	N/A					104A	99A	90A	83A
SX-1873-30	18	7300	750	9.7	N/A					223A	212A	193A	177A

* Run as a Bank with 2 lamps connected in series powered by a single Lamp Driver

Note: The supply loads provided are based on the maximum load of the system (i.e full power).

Installation Checklists

General Installation Checklist

Inspect the goods to ensure no damage has occurred in transit. Check that that all ordered items are present.	
Match the chamber and panel – if multiple systems are delivered to the same site please ensure that the serial numbers match.	
Install the control panel as described in the Control Panel Installation Guidelines	
Run the cables in accordance with local regulations. (Do not pull cables tight around sharp corners as this may affect the performance and reliability of the system, segregate cables, do not cable tie together.)	
Cabling required from Control Panel to Chamber: • Lamp Cable – 1 per lamp, supplied as standard • Earth Cable 1 core - supplied as standard • Temperature Probe Cable - 1 per probe, supplied as standard • UV Probe Cable - 1 per probe, supplied as standard • Wiper Cables (if fitted) ➢ Opto Cable ➢ Wiper Motor Cable	

Chamber Installation Checklist

Connect Earth/Ground cable from the boss on the chamber to the control panel ground/earth point.	
Install the temperature probe by screwing the AT487- temperature probe into the boss on the top of the chamber. Connect the temperature probe cable.	
Install UV Probe Insert the UV probe/s supplied into the UV housing/s located on the chamber Connect the UV Probe cable.	
Check the quartz sleeve/seal Prior to flooding, remove the lamp covers and check the quartz sleeve/thimble is not damaged as per the Maintenance section of this manual.	
Install the lamp/s and make the electrical connections Check that the correct lamp is used, visually checking the lamp for any damages. If more than 1 lamp is fitted ensure the lamps are fitted in order (i.e. lamp1 then lamp2 etc.)	

Control Panel Installation Checklist

Before the power supply to the panel is switched on:	
Connect the Earth/Ground cable from the chamber to the terminal provided in the panel.	
Connect the Temperature probe and UV probe as per the schematic; this is usually on a terminal strip at the bottom of the panel. Adjacent numbers relate to the connections of the probe wires If more than 1 probe is fitted ensure that probe 1 “monitors” the first lamp	
Connect the lamp cables as per the schematic; this is usually on a terminal strip at the bottom of the panel. Adjacent numbers relate to the connections of the lamp cable cores. See electrical schematic for more information	
Connect the wiper cables as per the schematic; the wire numbers from the wiper mechanism relate to the numbers on the terminal strip. See electrical schematic for more information. Consult Wiping System section for more details on wiper. Note: The wiper is factory calibrated. Please ensure the cables are connected before turning the board on or the wiper will lose its calibration and will require recalibration.	
Connect the Customer I/O – Connect the digital/analogue I/O as required. Please refer to the Control Operation section of the manual	

Commissioning

Use the Commissioning Procedure Checklist to safely put the unit into operation. The following steps should also be taken:

1. The pipe work and UV systems should be filled with water and excess air vented. Check for leaks
2. For commissioning the flow rate of liquid to cool the lamps should be at least 1 m^3/hr (4 gpm) per kW to cool the lamps
3. After lamps have been switched off wait 15 minutes to allow them to cool before attempting to restart - frequent start / stop cycles will shorten lamp life.

	**WARNING!**
	Only switch the unit on when the dust cover is fitted.

Commissioning Procedure Checklist

Ensure the unit has been installed as per local regulations and according to the Installation Guidelines	
Check that the incoming mains connections are correct: Single Phase Neutral and Earth, 2 Phase (Neutral) and Earth, 3 Phase (Neutral) and Earth, Please check the electrical schematics to verify what power supply is required	
Ensure quartz and lamps are installed and waterproof	
Ensure Temperature and UV Intensity probes are installed and connected to their corresponding terminals in the control panel	
Ensure Lamp cables are installed and connected to their corresponding terminals in the control panel	
Ensure the earth/ground cable is connected from the chamber to the terminal provided in the panel.	
Ensure full flow through the reactor is available and any air trapped at the top of the reactor is released	
Turn on the power at the distribution source	
Check that the voltage on the incoming side of the Isolator is correct and record this in the UV Commission Work Sheet that follows this section	

Test temperature sensor by disconnecting the probe on the chamber; a fault should be displayed. Reconnect the probe and clear the fault (refer to the Control Operation section for more details).	
Time & Date - verify that the time and date are set correctly and adjust if necessary (see Operation section for more details).	
Check that the system variables are set as required i.e. Fixed Flow Rate – consult the System Databook for more details	
Check lamp fault – without turning on the lamp MCBs, start the system; a lamp fault should be displayed. Clear the fault (see Operation section for more details).	
Turn on the Lamp MCBs	
Start the system	
Check the fan is running correctly	
Once the system enters run mode **record the Lamp currents** - allow the system to settle for a minimum of 5 minutes before recording these values.	
Calibrate the UV probe – consult the UV Sensor Calibration section for more details	
Stop the system	
Activate the Automatic Wiper - the system should perform a sweep of the quartz as soon as the Wiper control board is activated Calibrate the wiper (If necessary) – consult the **Automatic Quartz Wiping System** section for more details	

UV Commission Work Sheet

All readings to be obtained with Fixed Flow Rate and lamp in Full Power

Supply Voltages	
P1 – P2	
P1 – P3	
P2 – P3	
P - N	

Lamp Current / Volts / Power															
L1				L2				L3				L4			
L5				L6				L7				L8			
L9				L10				L11				L12			
L13				L14				L15				L16			
L17				L18											

Spectra Readings		Calibration				Spectra Settings	
Dose (mJ/cm²)		Probe 1 UV %		m/A		Final UVT %	
Temp ˚C		Probe 2 UV %		m/A		Flow meter Enabled (Y or N)	
Flow (m³/hr)		Probe 3 UV %		m/A		Auto Restart Enabled (Y or N)	
Nominal lamp current		Probe 4 UV %		m/A		Re Strike Time (mins)	
Average lamp current		Probe 5 UV %		m/A		Spectra II SD Card back up	
Average UV%		Probe 6 UV %		m/A			
		Probe 7 UV %		m/A			
		Probe 8 UV %		m/A			
		Probe 9 UV %		m/A			

Checks (pass √ or fail X)		(√ or X)		(√ or X)		(Y or N)	
Lamp Fault		Chamber		Installed Correctly		Cooling fans operating	
Temperature Trip		MCB's Test		Auto wiper		Wiper Calibrated	
Chamber Earth Cable		Quartz Leaks		Low Dose Alarm		Lamp Cable Flash Test	

Condition of UV system on leaving site					
Clean		Local/Remote		By-Pass fitted (Y or N)	
Alarms		Full/Variable/Half Power Enabled		Running (Y or N)	

UV Sensor Calibration

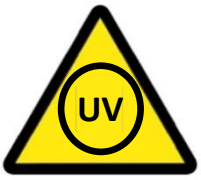

Warning: Do not expose skin or eyes to ultraviolet light.

AT-900 Validated 4-20mA UV Sensor

The validated UV sensors are factory calibrated in reference to a known device.
They are most often used on validated UV systems but can also be used on non-validated UV systems. These sensors are 4-20mA devices and are fitted to the UV sensor housing using a black plastic adaptor.

These sensors must be returned to the factory for calibration every 12 months.
Please contact your supplier for details.

SX Maintenance & Spares

SAFTEY: Ensure system is electrically isolated and chamber is fully drained before any maintenance work is carried out.

Maintenance Schedule

Maintenance Log

Whenever maintenance work is carried out on the UV system, particularly with reference to lamp changes and cleaning / replacing the quartz, a record should be kept of the work carried out and the lamp run hours noted. This log should be used to monitor general lamp life and to develop accurate frequencies for cleaning and replacing the quartz components.
A maintenance log sheet can be found in the systems Data-book.

Performance Monitoring

Taking samples from the sample points on the inlet and outlet legs of the UV chamber can be used to monitor the performance of the system. Care should be taken when sampling not to contaminate the sample itself. Poor performance test results can often be traced back to poor sampling techniques.
Note: ensure system is electrically isolated and chamber is fully drained before any maintenance work is carried out.

UV Lamp

Lamp life expectancy is based on continuous use before the output drops to the low UV output threshold level, making replacement necessary. Frequent stop / start operation will reduce lamp life. Please refer to the system Data-book for typical life expectancy of Lamps.

Quartz Cleaning and Replacement

The quartz thimble should be removed and cleaned at a regular intervals. Please refer to the system Data-book for typical life expectancy of Quartz. The wiper (if fitted) cleaning frequency should be increased if there are excessive deposits on the quartz thimble or decreased if the thimble remains very clean.
A change in water quality may necessitate a change in the wiper (if fitted) cleaning frequencies. The quartz thimble should be removed and cleaned in a soap and water solution. Heavier or stubborn deposits can be removed by soaking in a 5% solution of citric acid or wiping with household vinegar. To remove fingerprints from the quartz thimble, use surgical spirit and a lint free cloth. Please refer to the system Data-book for typical life expectancy of Quartz.

Seals

It is good practice to replace the seals whenever the quartz thimble is removed from the chamber.

Control panel

Commissioning often takes place in a dusty environment. The inlet filter mat should be cleaned shortly after commissioning and at regular intervals depending on the cleanliness of the air. The control panel RCD (ground fault relay) should also be tested at regular intervals by an electrically competent person by pressing its Test button.
Note that this will shut the unit down and display a Ground Fault.

Twist-lok System Maintenance

UV Lamp Maintenance

Please refer to the Health & Safety Section at beginning of the manual for Symbol explanations. These are to be adhered to when carrying out the following maintenance procedures.



UV Lamp Extraction	
1	Unscrew the clamp ring retaining nut locking the Moulded Twistlok Lamp Connector in place and remove
2	Carefully disconnect the lamp connector from the lamp and remove
3	Twist the lamp until unlocked and carefully extract from the quartz keeping the lamp parallel to the quartz thimble at all times to avoid damage

UV Lamp Installation	
Before inserting a new lamp, ensure all components are clean and dry. Check that all components are mechanically sound and assembled correctly. **Note:** Please ensure that no dirt, debris or fingerprints get onto the lamp surface as this will reduce the lamp life	
1	Carefully insert the lamp into the quartz thimble, keeping it parallel with the quartz to avoid damage
2	Twist lamp to lock in place, taking care to ensure the return rods are not pointing towards the UV sensor
3	Carefully connect the lamp connector ensuring that the locking pin is located correctly
4	Fasten the clamp ring retaining nut to lock the moulded Twist-lok lamp connector in place
5	Ensure the Lamp hours have been reset via the control panel (see **Control Operation** section for more details)

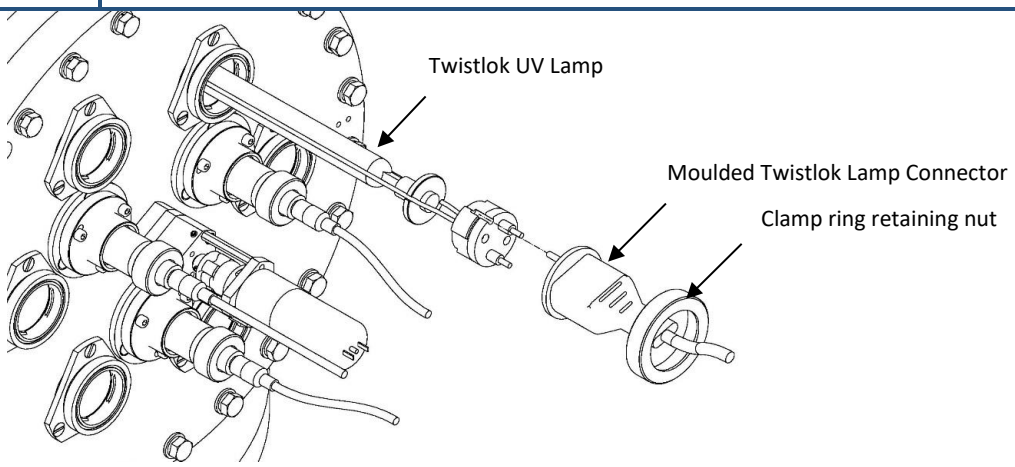

Quartz Thimble Maintenance

Please refer to the Health & Safety Section at beginning of the manual for Symbol explanations. These are to be adhered to when carrying out the following maintenance procedures.

	

Quartz Thimble Extraction	
1	Follow the **UV Lamp Extraction** procedure detailed in the previous subsection
2	Remove the clamp ring screws keeping one hand pushing on to the clamp ring. The quartz thimble is spring loaded and will be pushed out of the chamber. Carefully remove the clamp ring and PTFE backing ring. If the clamp ring seems tightly in place this will be the secondary seal doing its job and this is normal. Gentle twisting of the clamping should ease extraction
3	Remove the primary 'O' ring seal
4	Carefully remove the quartz thimble keeping it parallel to avoid damage

Quartz Thimble Installation	
1	Carefully slide the new/cleaned quartz thimble into the hole in the end flange keeping it parallel so it locates in the cup at the opposite end of the chamber. If an automatic wiping system is installed, ensure the thimble is gently guided through the wiper ring (this is can be aided by applying a little water onto the end of the quartz)
2	Place the primary 'O' ring seal over the quartz thimble and locate into the 'O' ring groove. Replace the secondary seal around the clamp ring if required
3	Place the PTFE washer in the clamp ring and place onto the end of the thimble. Apply some pressure on the clamp ring to force it toward the flange. Fasten with the screws finger tight initially. Tighten the screws in a radial pattern, a quarter turn at a time a 1-2mm solid flat bead can be seen on the seal through the quartz. **Do not over tighten.** **Ensure the seal does not leak**
4	Follow the **UV Lamp Installation** procedure detailed in the previous subsection

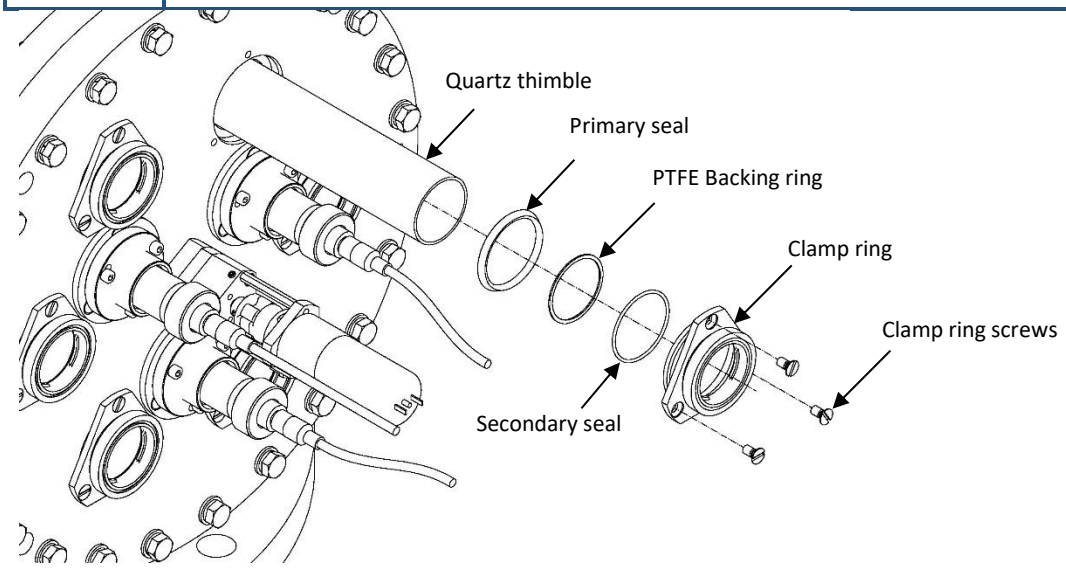

UV Sensor Maintenance

AT 900 Validated FUV Housing Maintenance

Please refer to the Health & Safety Section at beginning of the manual for Symbol explanations. These are to be adhered to when carrying out the following maintenance procedures.

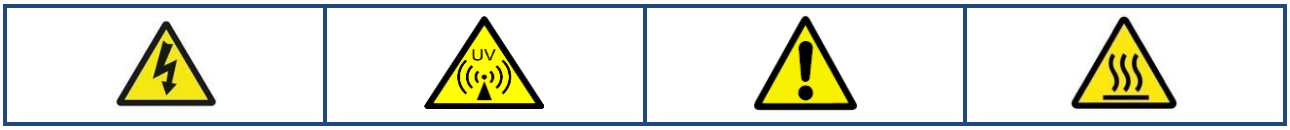

UV Sensor Housing Removal	
1	Unscrew UV probe cable connector
2	Unscrew the FUV Cap
3	Remove the UV Probe
4	Unscrew the FUV Housing

UV Sensor Housing Installation	
Ensure all components are clean and dry. Ensure that no dirt or debris gets into the UV Sensor quartz or probe housing as this may affect readings.	
1	Replace O'ring if required
2	Screw in place the FUV Housing
3	Insert the UV Probe back into the housing, and replace the cap
4	Screw the UV probe cable connector to the UV probe

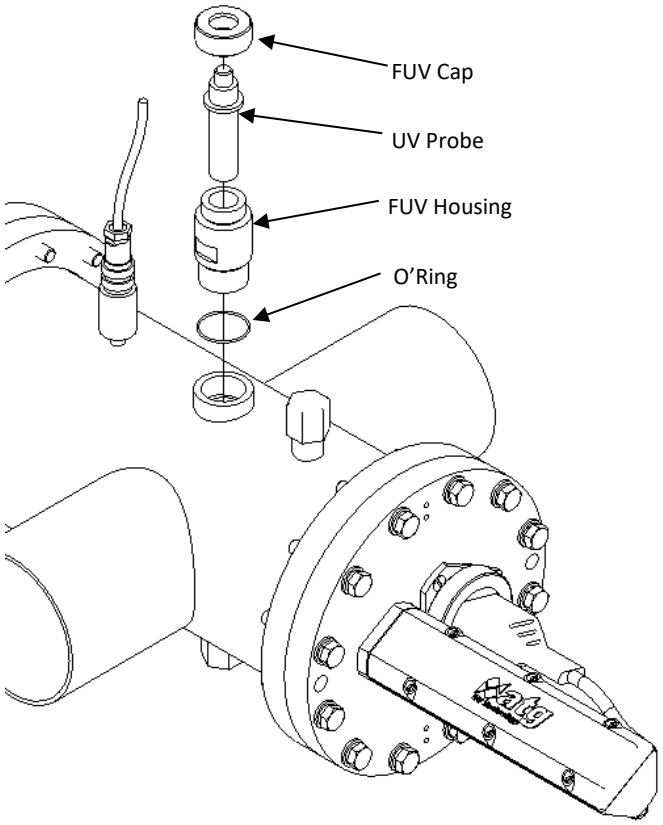

AT 900 Validated Sensor Housing Maintenance

Please refer to the Health & Safety Section at beginning of the manual for Symbol explanations. These are to be adhered to when carrying out the following maintenance procedures.

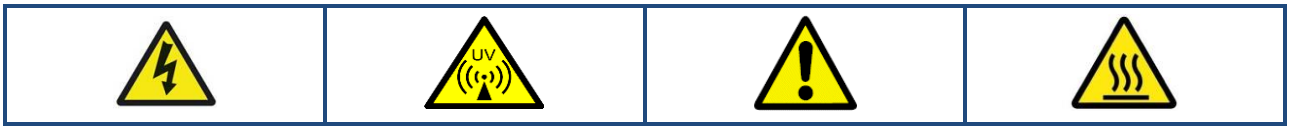

UV Sensor Housing Removal	
1	Unscrew UV probe cable connector
2	Unscrew the UV probe cap and remove the UV probe from the housing
3	Unscrew the 3 fixing screws
4	Remove the UV Probe Housing

UV Sensor Housing Installation	
Before inserting a new/cleaned validated sensor housing, ensure all components are clean and dry. Ensure that no dirt or debris gets into the UV Sensor quartz thimble or probe housing as this may affect readings.	
1	Insert the UV Probe housing, ensuring that the fixing screw holes are inline.
2	Install fixing screws
3	Insert the UV Probe back into the housing, and replace the cap
4	Screw the UV probe cable connector to the UV probe

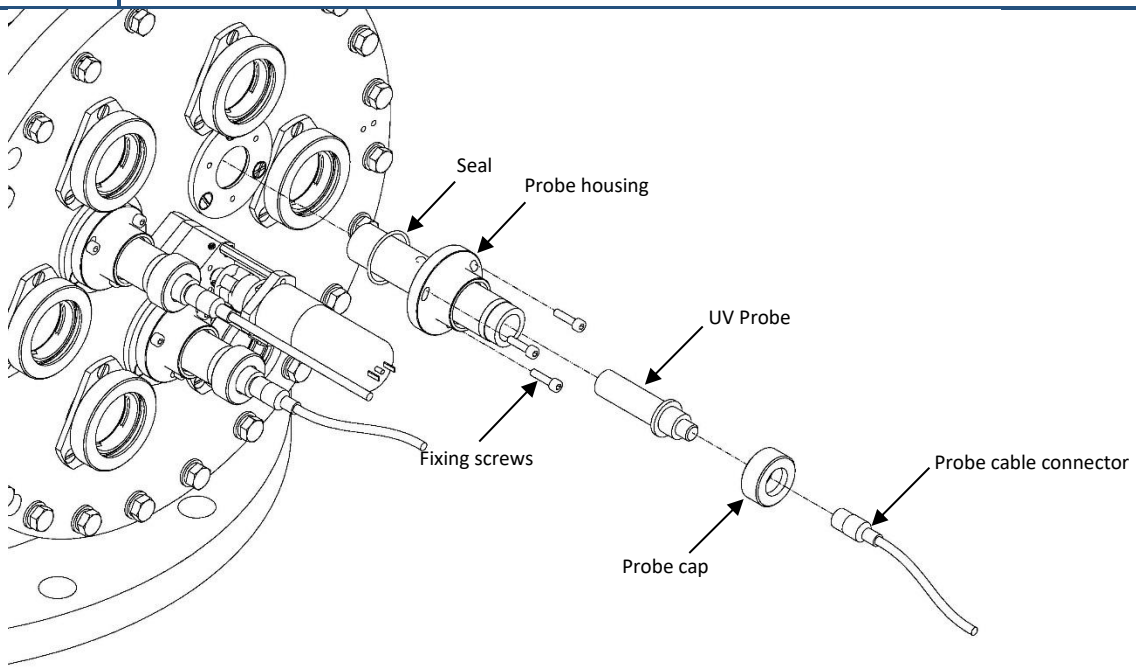

UV Sensor Quartz Thimble Maintenance

Please refer to the Health & Safety Section at beginning of the manual for Symbol explanations. These are to be adhered to when carrying out the following maintenance procedures.

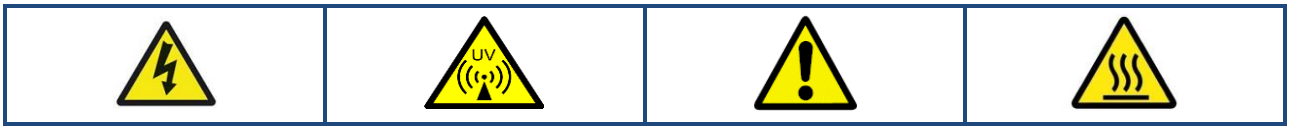

UV Quartz Thimble Extraction	
1	Follow the **UV Sensor Housing Removal** procedure detailed in the previous subsection
2	Remove the clamp ring screws keeping one hand pushing on to the clamp ring - the quartz thimble is spring loaded and will push out of the chamber. Carefully remove the clamp ring and PTFE backing ring.
3	Remove the 'O' ring seal
4	Carefully remove the quartz thimble keeping it parallel to avoid damage

UV Quartz Thimble Installation	
Before inserting a new/cleaned UV sensor Housing quartz thimble ensure all components are clean and dry. Ensure that no dirt, debris get into the UV Sensor quartz thimble or probe housing as this may affect readings.	
1	Carefully slide the new/cleaned quartz thimble into the hole in the end flange keeping it parallel so it locates in the cup at the opposite end of the chamber. If an automatic wiping system is installed, ensure the thimble is gently guided through the wiper ring (this is can be aided by applying a little water onto the end of the quartz)
2	Place the 'O' ring seal over the quartz thimble and locate into the 'O' ring groove
3	Place the PTFE backing ring in the clamp ring and place onto the end of the thimble, then apply some pressure on the clamp ring to force it toward the flange. Fasten the screws finger tight initially then tighten the screws in a radial pattern a quarter turn at a time until a 1-2mm (1/12th ") solid flat bead can be seen on the seal. **Do not over tighten and ensure the seal does not leak**
4	Follow the **UV Sensor Housing Installation** procedure detailed in the previous subsection

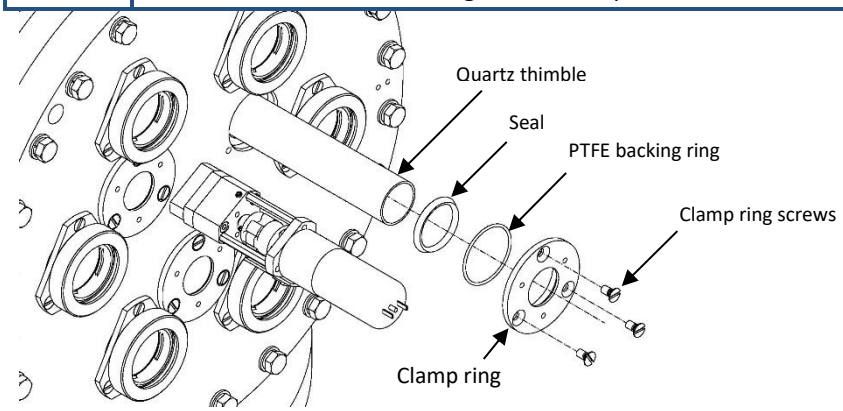

Wiper System Maintenance

Wiper Cover and Motor Maintenance (Non-Bearing Housing)

Please refer to the Health & Safety Section at beginning of the manual for Symbol explanations. These are to be adhered to when carrying out the following maintenance procedures.

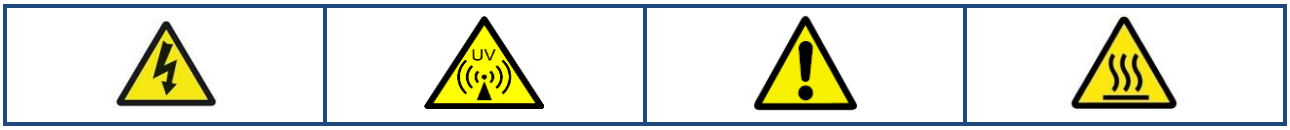

Wiper Cover & Motor Removal	
1	Unscrew the wiper cover screws and remove Wiper cover lid
2	Disconnect the electrical connections on the motor, taking note of the cable positions.
3	Unscrew the wiper cover fixing screws and remove wiper motor & cover assembly

Wiper Motor & Cover Installation	
1	Screw the wiper motor & cover in place lining the fixing holes with the holes on the wiper cover. Screw in place using the wiper cover fixing screws Ensure the Sensor Cam coupling is located and mated with the rubber coupling.
2	Re-connect all electrical connections
3	Screw back in place the wiper motor cover lid with the wiper cover screws

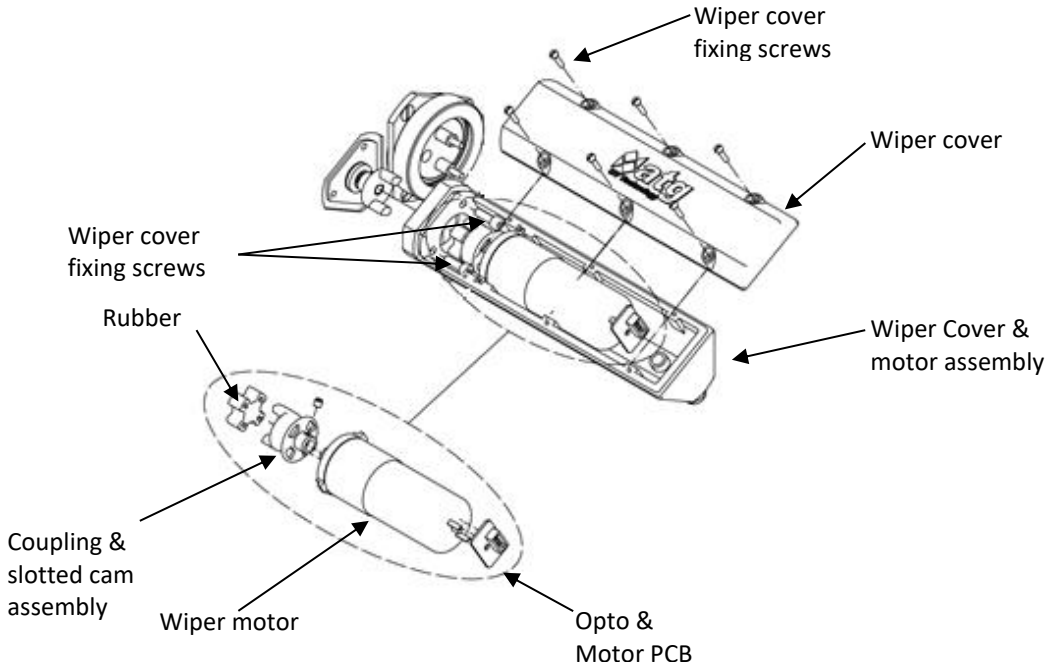

Wiper Cover and Motor Maintenance (Bearing Housing)

Please refer to the Health & Safety Section at beginning of the manual for Symbol explanations. These are to be adhered to when carrying out the following maintenance procedures.

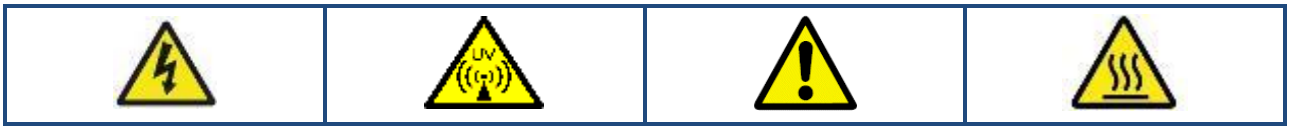

Wiper Cover & Motor Removal	
1	Unscrew the nylon nuts, remove small 'O' rings and remove the cover.
2	Disconnect the electrical connections on the motor, taking note of the cable positions. Unscrew the pillar retaining screws and the sensor cam coupling grub screw.
3	Remove the motor assembly.

Wiper Motor & Cover Installation	
1	Reinstall the Sensor Cam coupling on the wiper shaft. Install the motor assembly in the original position. Check that the motor shaft is located in the Sensor cam coupling.
2	Attach the wiper pillars using screws and tighten the Sensor cam coupling grub screw to connect the Wiper and motor shafts together.
3	Refit the wiper motor cover, and fasten with the seals and nylon nuts.

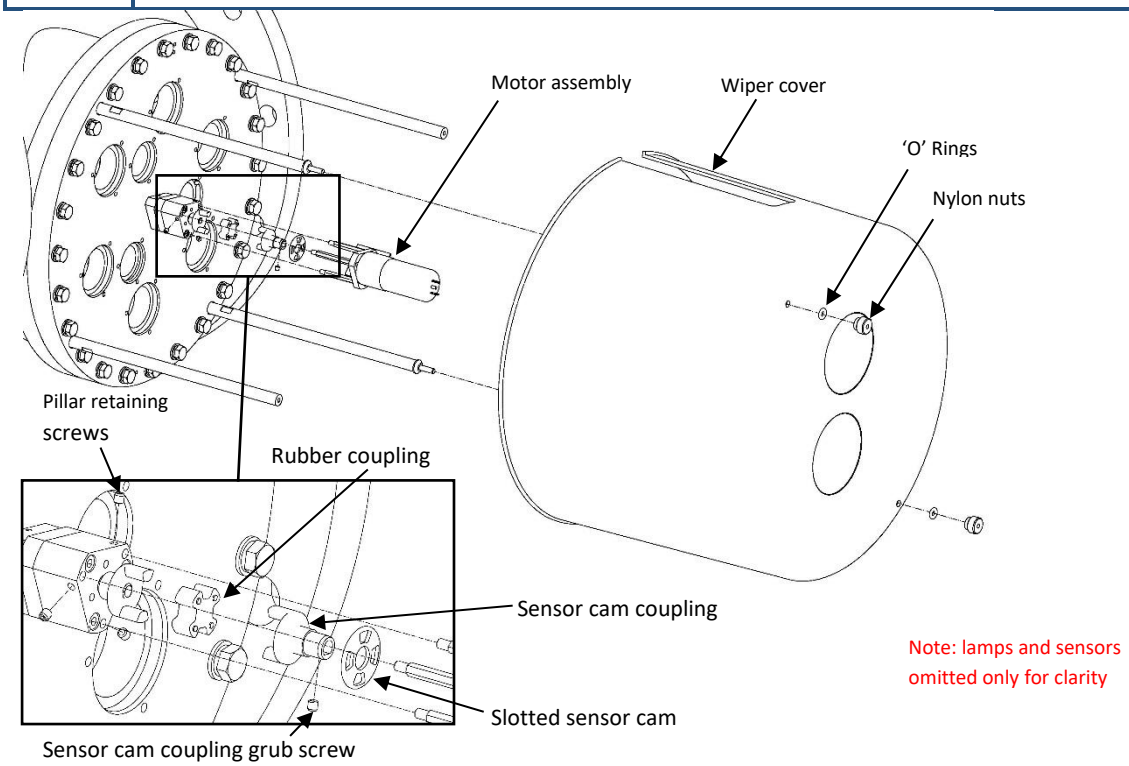

Wiper Bearing & Seal Maintenance (Bearing Housing)

Please refer to the Health & Safety Section at beginning of the manual for Symbol explanations. These are to be adhered to when carrying out the following maintenance procedures.

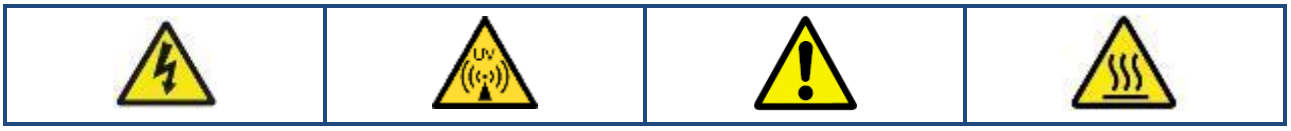

Wiper Bearing & Seal Removal	
1	Remove the motor assembly (see **Wiper Cover & Motor Removal** procedures)
2	Remove the grub screw and slide off the the coupling.
3	Unscrew the 3 bolts and remove the bearing housing. Remove the Bearing for inspection.
4	Remove nut and screw from the Thrust bush and slide it off the wiper shaft. Remove the Inner Bearing Housing screws and then remove the inner bearing housing and bearing.
5	Remove the seal housing and quad ring seals for inspection.

Wiper Bearing & Seal Installation	
Ensure that new seals are always installed when maintenance is carried out and the bearings are in good condition and oil if necessary.	
1	Insert Quad Ring Seal/Backing Ring/Quad Ring Seal into one side of the seal Housing and Quad Ring on the other side **WARNING: These components must be greased!** Slide the assembly on to the wiper shaft.
2	Replace the Inner Bearing Housing and bearing. Replace the three bolts into the inner bearing housing.
3	Replace the thrust bush and line up the fixing hole; fasten with the screw down.
4	Replace the Outer Bearing Housing and bearing and secure with bolts
5	Reinstall the coupling and secure with the grub screw. Check that the shaft can be turned by hand, It should feel tight but be movable by hand.

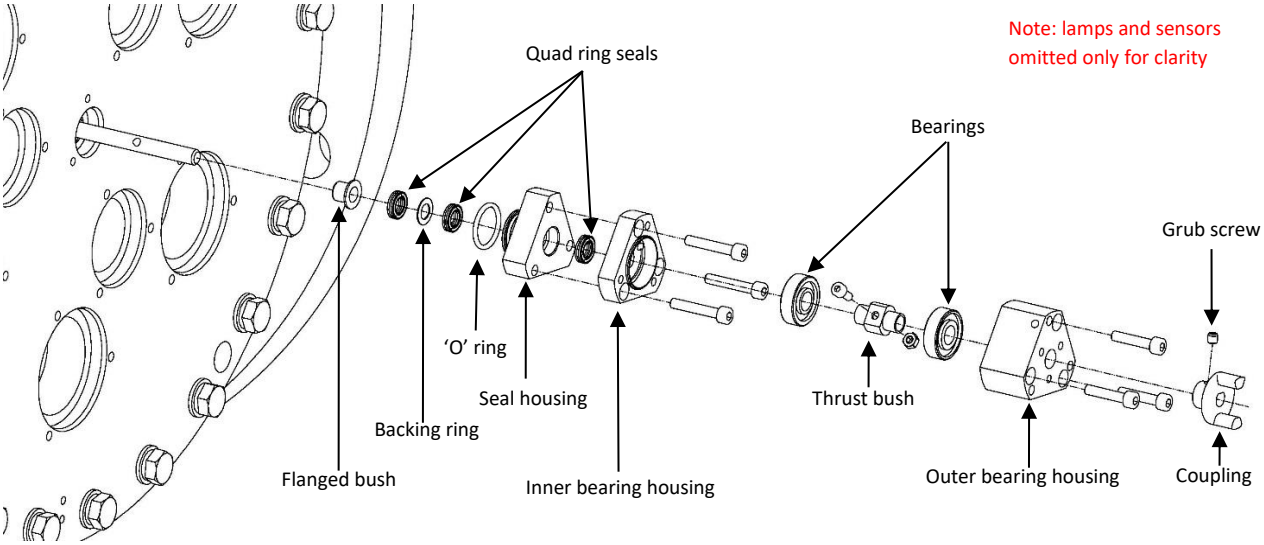

Wiper Blade Maintenance

Please refer to the Health & Safety Section at beginning of the manual for Symbol explanations. These are to be adhered to when carrying out the following maintenance procedures.

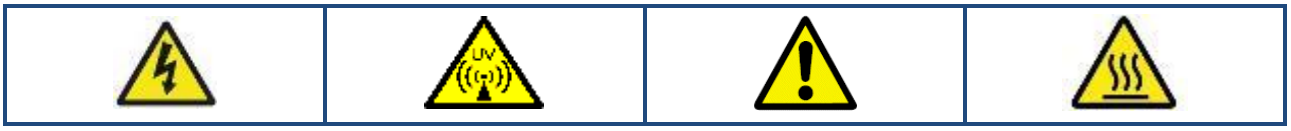

Wiper Blade Removal	
1	Remove the motor assembly (see Wiper Cover & Motor Removal & Wiper Bearing & Seal Removal sections).
2	Remove the UV Lamps, UV sensors and Quartz Thimbles (see UV Lamp Extraction, & Quartz Extraction sections.)
3	Unscrew the flange retaining bolts. This will allow the flange, the wiper carriage & the ACME shaft to be removed. For larger flanges, use the slider bars

Wiper Blade Installation	
1	Replace the old wiper blades with the new blades and fit them accordingly.
2	Slide the drive side flange, the wiper carriage & the AMCE shafts back into the chamber & fix back in place with the flange retaining bolts (check the 'O' seal to see if needs to be replaced).
3	The Quartz Thimbles and UV Lamp should be replaced (refer to **UV Lamp installation, & Quartz Installation** procedures).
4	Re-fit the wiper motor assembly (refer to **Wiper bearing & Seal Installation & Woper Motor & Cover Installation** procedures).
5	If the carriage has not been moved then there should be no need to recalibrate the wiper. If the carriage has been moved, recalibration of the wiper is imperative (refer to **Automatic Wiper** section of the manual).

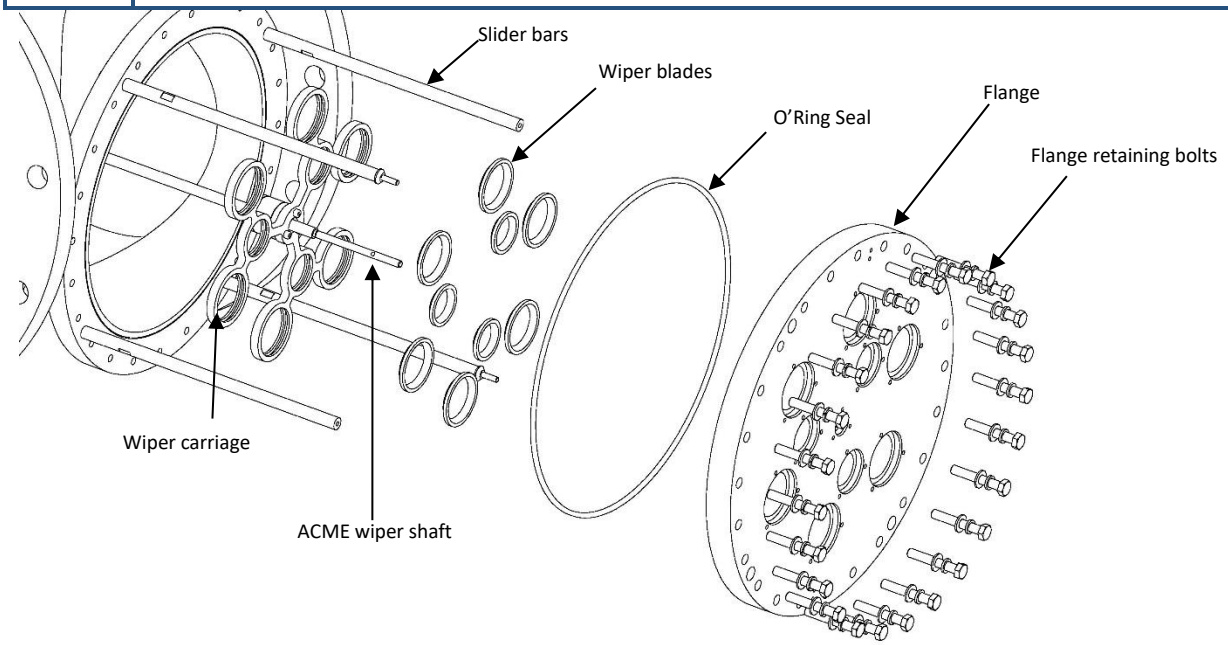

Wiper Body Maintenance (Single-Lamp System)

Please refer to the Health & Safety Section at beginning of the manual for Symbol explanations. These are to be adhered to when carrying out the following maintenance procedures.

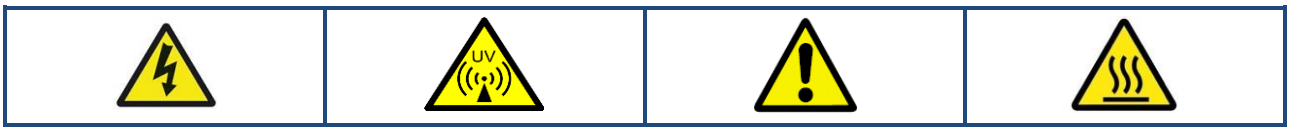

Wiper Carriage Removal	
1	Remove the Motor assembly (refer to **Wiper Cover & Motor Removal & Wiper Bearing & Seal Removal** procedures)
2	Remove the UV Lamps & Quartz Sleeve (refer to **UV Lamp Extraction & Quartz Sleeve Extraction** procedures).
3	Unscrew the flange retaining bolts. This will allow the flange, the wiper carriage & the ACME shaft to be removed.
4	Remove the Wiper carriage from the Wiper shaft.
5	Unscrew the Wiper body screws to release the Lead screw nut and Wiper carriages

Wiper Body Installation	
1	Replace Lead Screw Nut (if required).
2	Line up the Wiper Carriage and Lead Screw Nut Fixing Ring with the Leads screw nut and screw together with the wiper body screws.
3	Screw the Wiper Assembly back onto the Wiper Shaft.
4	Re-calibration of the wiper is required after Wiper body removal (refer to **Automatic Wiper** section).

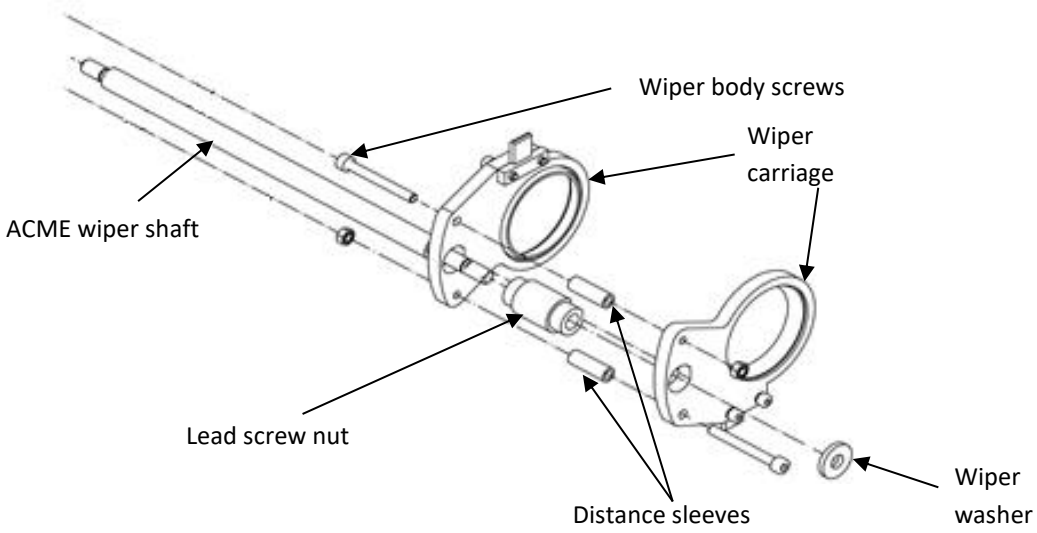

Wiper Body Maintenance (Multi-Lamp System)

Please refer to the Health & Safety Section at beginning of the manual for Symbol explanations. These are to be adhered to when carrying out the following maintenance procedures.

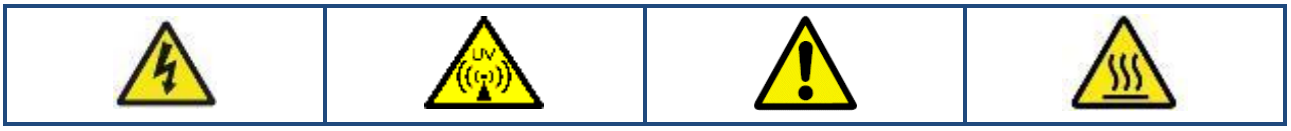

Wiper Body Removal	
1	Remove the motor assembly (see **Wiper Cover & Motor Removal & Wiper Bearing & Seal Removal** procedures).
2	Remove the UV Lamps, UV sensors and Quartz Thimbles (see **UV Lamp Extraction, & Quartz Extraction** procedures)
3	Unscrew the flange retaining bolts. This will allow the flange, the wiper carriage & the ACME shaft to be removed.
4	Remove the circlip from one side of the wiper shaft and unscrew the wiper carriage assembly from the wiper shaft.
5	Unscrew the wiper carriage from one side of the wiper body lid. Remove one side of the wiper body lid by removing the wiper body screws.

Wiper Body Installation	
1	Replace Lead Screw Nut (if required) and insert inside the Wiper Body.
2	Screw is place both Wiper Body Lid's on either side of the Wiper Body ensureing the O'Ring Seal and flanged bush are between.
3	Screw in the place Wiper Carriage onto one side of the Wiper Lid.
4	Screw the Wiper Assembly back onto the Wiper Shaft, ensuring to clip the circlips back in place on the ends of the shaft.
5	Re-calibration of the wiper is required after Wiper body removal (refer to **Automatic Wiper** procedures).

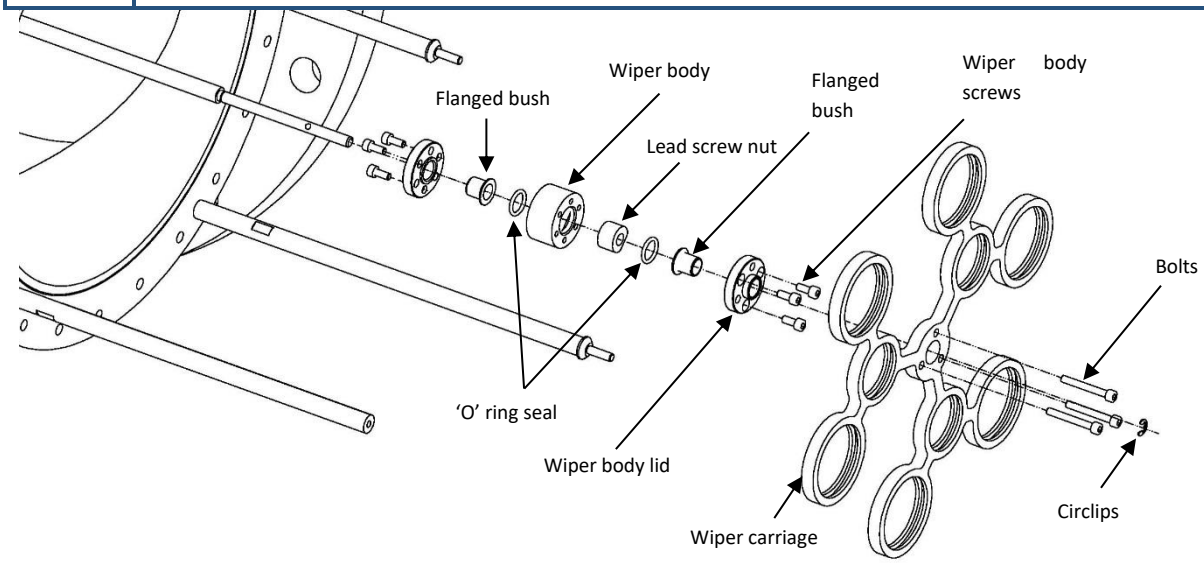

Spare Parts

General Assembly

Note: Typical of a SX-635-16

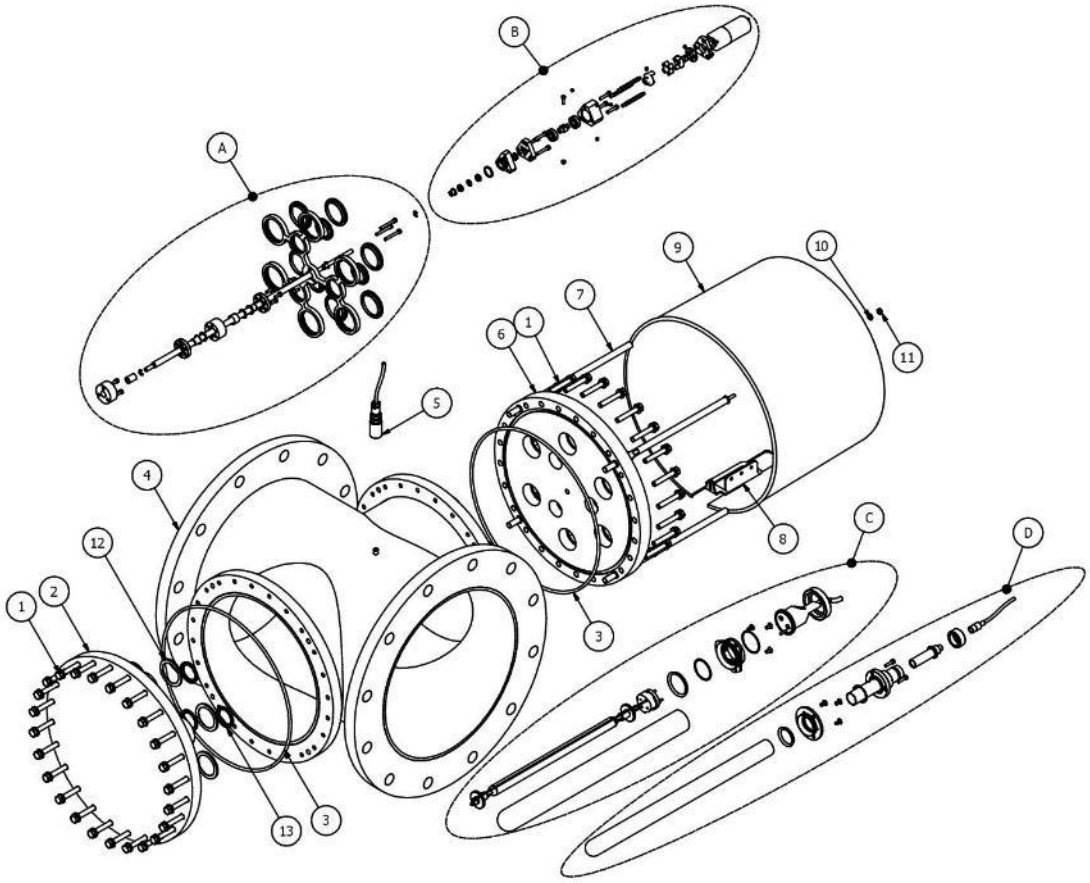

ITEM	PART NO.	DESCRIPTION
A	Automatic Wiper Carriage Assembly	
B	Automatic Wiper Drive Assembly	
C	Lamp & Quartz Assembly	
D	UV Probe assembly	
Note: the sizes of parts in this assembly may vary according to chamber size		
1	-	M10 x 60 Hex Head Bolt
2	-	Cup Flange
3	Refer to Maintenance Spares List	'O' Ring Seal
4	-	Chamber Body
5	W2T873075	AT-487 PT 100 Temperature Probe Assembly
6	-	Front Flange
7	-	Flange Slider Bar
8	-	Gland Plate
9	-	Dust Cover
10	W2T874325	'O' Ring
11	-	M5 Nylon nut
12	Refer to Maintenance Spares List	49Dia Thimble Support Seal
13	Refer to Maintenance Spares List	36Dia Thimble Support Seal

Quartz & Lamp Assembly

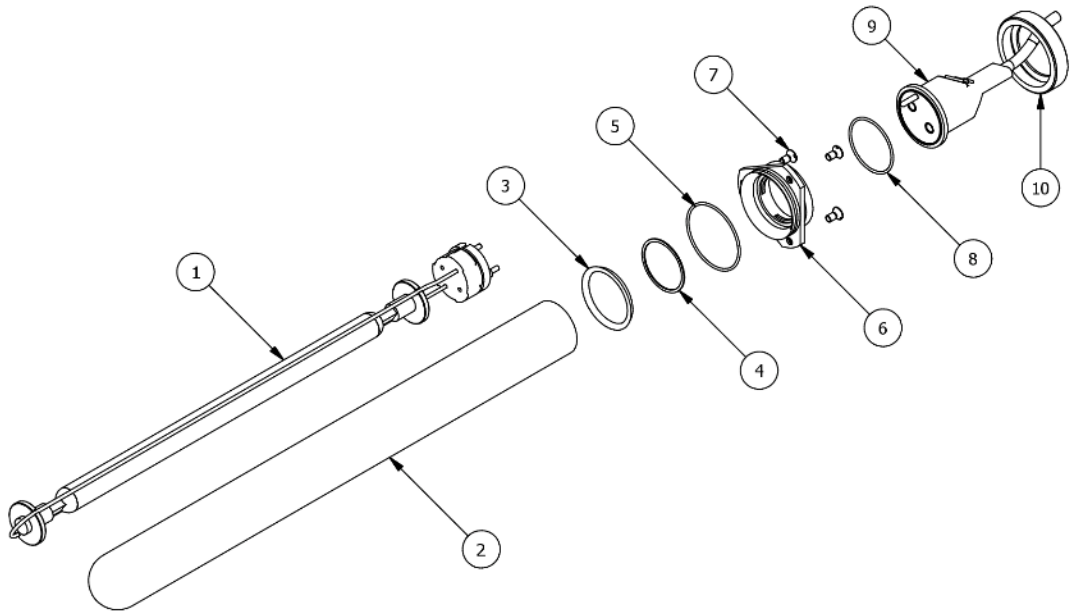

ITEM	PART NO.	DESCRIPTION
1	Refer to Maintenance Spares List	Twistlok UV Lamp
2	Refer to Maintenance Spares List	Lamp Quartz Thimble
3	Refer to Maintenance Spares List	EPDM 'O' Ring (Primary)
4	Refer to Maintenance Spares List	PTFE Clamp Ring Gasket
5	Refer to Maintenance Spares List	EPDM 'O' Ring (Secondary)
6	W2T873826	Clamp Ring - Screwed
7	-	M6 x 12 Slotted CSunk flat head screw
8	W2T874291	EPDM 'O' Ring 48 x 2.0 V70
9	-	Moulded Twistlok Lamp Connector
10	W2T873828	Clamp Ring - Screwed Retainer

FUV Sensor Housing Assembly

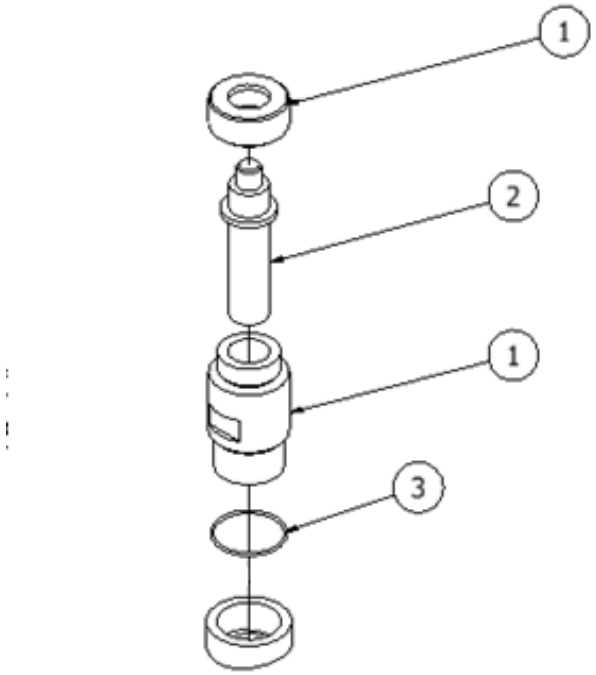

ITEM	PART NO.	DESCRIPTION
1	W2T892073	FUV Sensor Housing & Cap
2	Refer to Data-book	Validated UV Probe (ONORM)
3	Refer to Maintenance Spares List	PTFE Clamp Ring Gasket

UV Sensor Quartz Assembly

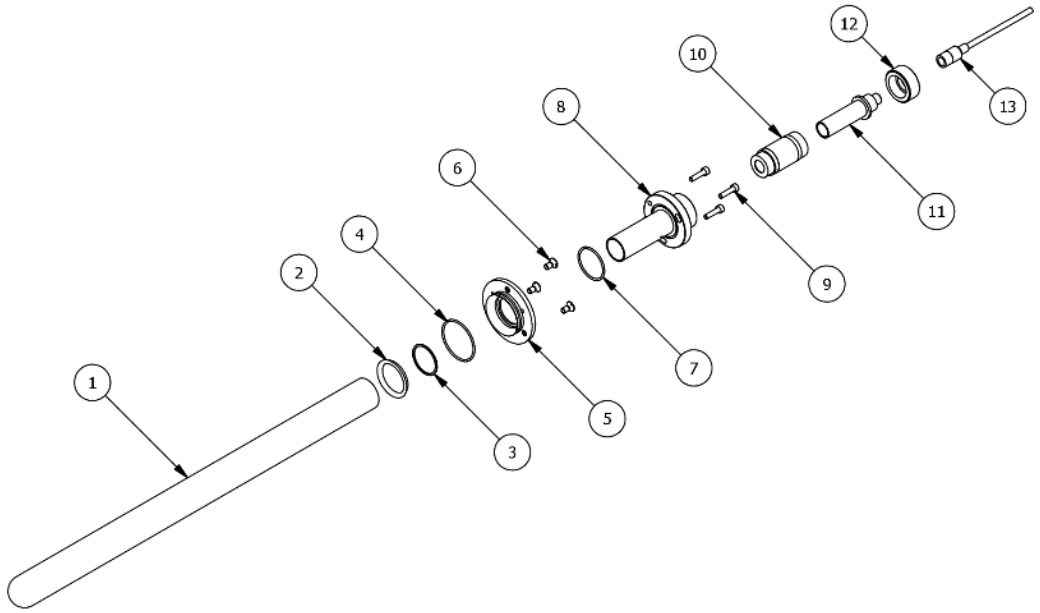

ITEM	PART NO.	DESCRIPTION
1	Refer to Maintenance Spares List*	UV Quartz Thimble
2	Refer to Maintenance Spares List	EPDM 'O' Ring (Primary)
3	Refer to Maintenance Spares List	PTFE Clamp Ring Gasket
4	Refer to Maintenance Spares List	EPDM 'O' Ring (Secondary)
5	W2T873600	QTH-36 Clamp Ring for UV Sensor
6	-	M6 x 12 Slotted CSunk flat head screw
7	W2T874269	EPDM 'O' Ring
8	W3T469393	UV Validated Probe Housing
	W3T469394	UV Validated Probe Housing (For SX-1873-30 only)
9	-	M5 x 20 Sckt Head Bolt
10	W2T873971	UV Validated Probe Adaptor (Base)
11	Refer to Data-book	Validated UV Probe (ONORM)
12	W2T873972	Validated UV Probe Adaptor Cap
13	-	UV Probe Connector and Cable

Automatic Wiper Drive Assembly (Non-Bearing Housing)

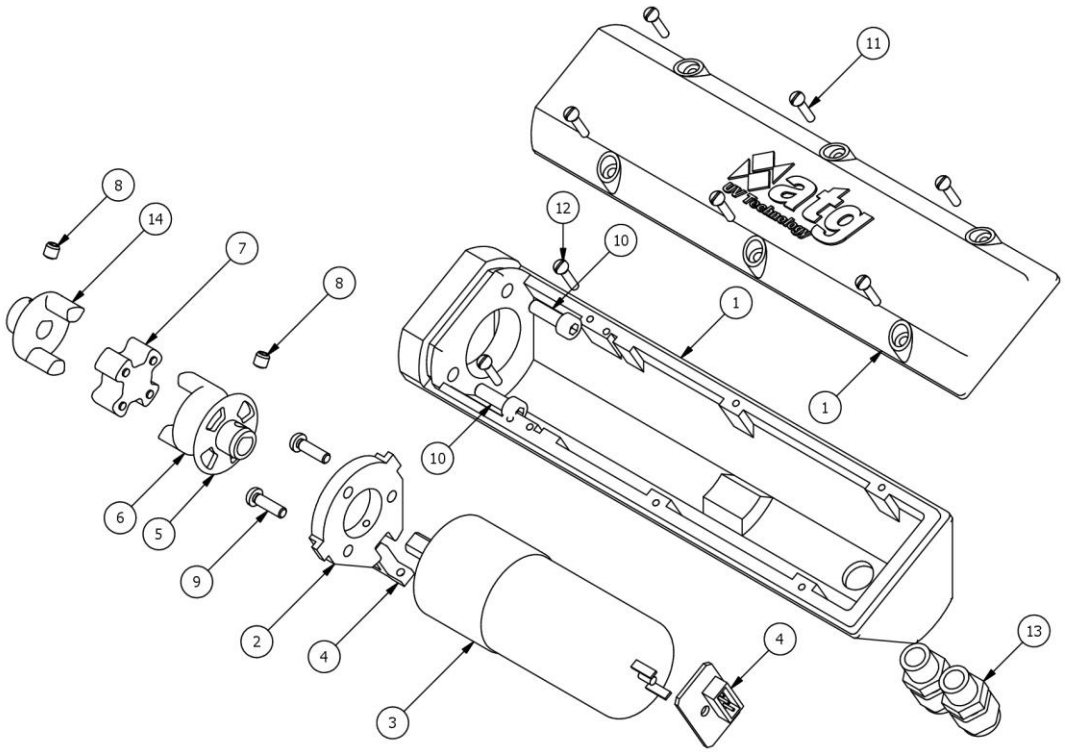

ITEM	PART NO.	DESCRIPTION
1	W2T873784 & W2T873785	Wiper Motor Body & Lid
2	W2T873783	Motor Housing Mount
3	W2T874493	Wiper Motor
4	W2T873069	ATUV-1150 - Opto Pulse Counter
5	W2T873767	12mm Shaft - Sensor Cam
6	W2T873766	12mm Shaft - Coupling Motor
7	W2T873730	Wiper Motor Rubber Coupling
8	-	M5 x 5 Grub screw
9	-	M4 x 12 Pan head screws
10	-	M5 x 25 Sckt Head Screw
11	-	M3.5 x 13 self-tapping screws
12	-	M3.5 x 9.5 self-tapping screws
13	-	M12 Gland
14	W2T873765	12mm Shaft - Coupling Shaft

Automatic Wiper Drive Assembly (Bearing housing)

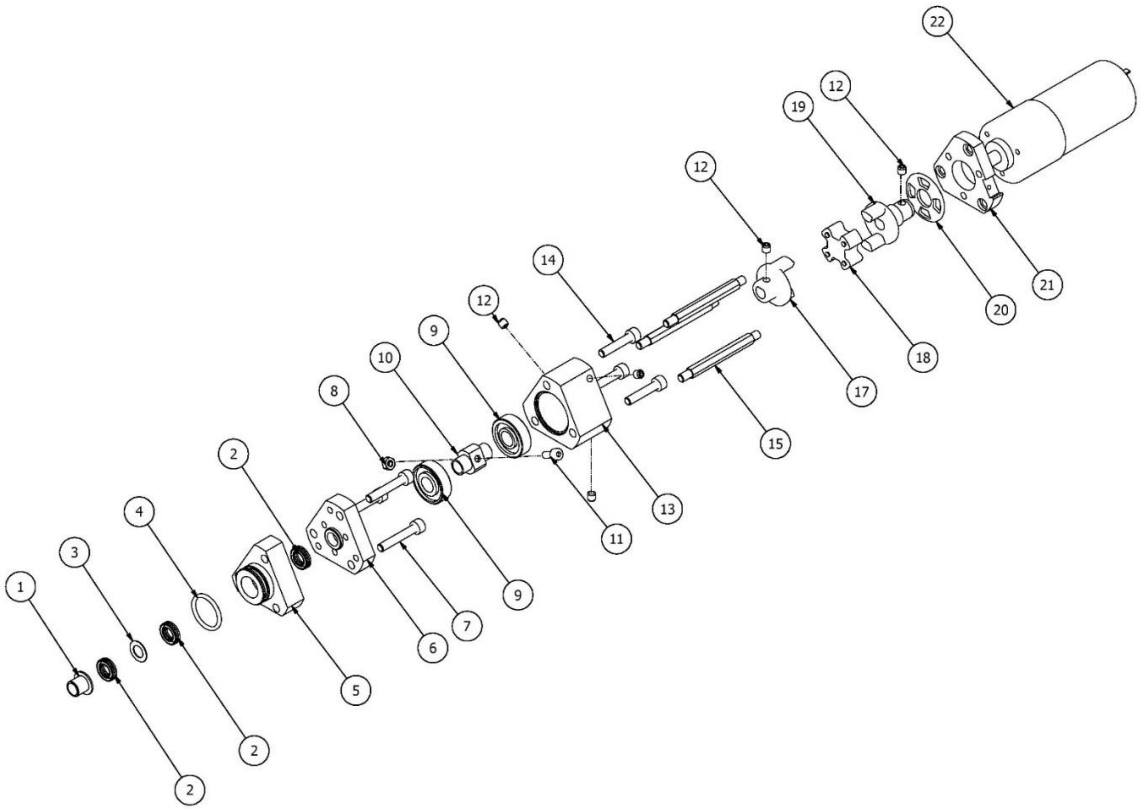

ITEM	PART NO.	DESCRIPTION
1	W2T873707	12mm Flanged Bush
	W2T873711	25mm Flanged Bush
2	Refer to Maintenance Spares List	Nitrile Quad Ring
3	Refer to Maintenance Spares List	PTFE Backing Ring
4	Refer to Maintenance Spares List	EPDM 'O'Ring
5	W2T873759	12mm Shaft - Seal Housing
	W2T873735	25mm Shaft - Seal Housing
6	W2T873760	12mm Shaft - Bearing Housing No1
	W2T873736	25mm Shaft - Bearing Housing No1
7	-	Sckt Head Bolt
8	-	Nylon Nut
9	W2T873688	12mm Angular Contact Ball Bearing
	W2T873746	25mm Angular Contact Ball Bearing
10	W2T873762	12mm Shaft - Lead Screw Thrust Bush
	W2T873745	25mm Shaft - Thrust Bush
11	-	Sckt Head Bolt
12	-	Hex Grub Screw
13	W2T873761	12mm Shaft - Bearing Housing No2
	W2T873737	25mm Shaft - Bearing Housing No2
14	-	Sckt Head Bolt
15	W2T873763	12mm Shaft - Mounting Pillar
	W2T873740	25mm Shaft - Wiper Motor Pillar
17	W2T873765	12mm Shaft - Coupling Shaft
	W2T873744	25mm Shaft - Coupling Shaft
18	W2T873730	Wiper Motor Rubber Coupling
19	W2T873766	12mm Shaft - Coupling Motor
	W2T873742	25mm Shaft - Coupling Motor
20	W2T873767	12mm Shaft - Sensor Cam
	W2T873743	25mm Shaft - 4 Way Sensor Cam
21	W2T873764	12mm Shaft - Motor Fixing Plate
	W2T873741	25mm Shaft - Motor Fixing Plate
22	W2T874493	Wiper Motor

Automatic Wiper Carriage Assembly (Single-Lamp System)

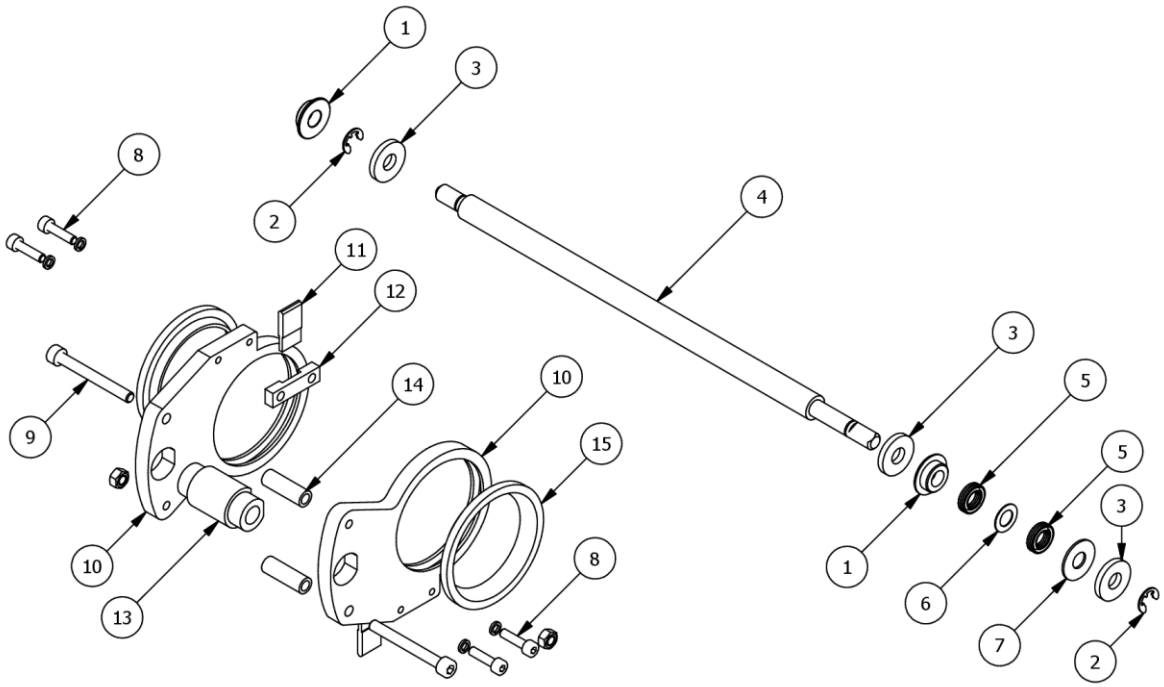

ITEM	PART NO.	DESCRIPTION
1	Refer to Maintenance Spares List	Wiper Bush (PTFE)
2	W2T873769	12mm Shaft - Wiper External Eclip
3	W2T873758	12mm Shaft - Wiper Washer
4	-	ACME Wiper Shaft
5	Refer to Maintenance Spares List	Nitrile Quad Ring
6	Refer to Maintenance Spares List	PTFE Backing Ring
7	Refer to Maintenance Spares List	PTFE - Wiper Washer
8	-	M4 x 16 Sckt Head
9	-	M5 x 45 Sckt Head
10	-	Wiper Carriage
11	Refer to Maintenance Spares List	Window Wiper Flap
12	W2T873559	Window Wiper Flap Fixing Bracket
13	Refer to Maintenance Spares List	Lead Screw Nut
14	W2T873676	Wiper Carriage Plate Distance Sleeve
15	Refer to Maintenance Spares List	49-Dia Wiper Rings

Automatic Wiper Carriage Assembly (Multi-Lamp System)

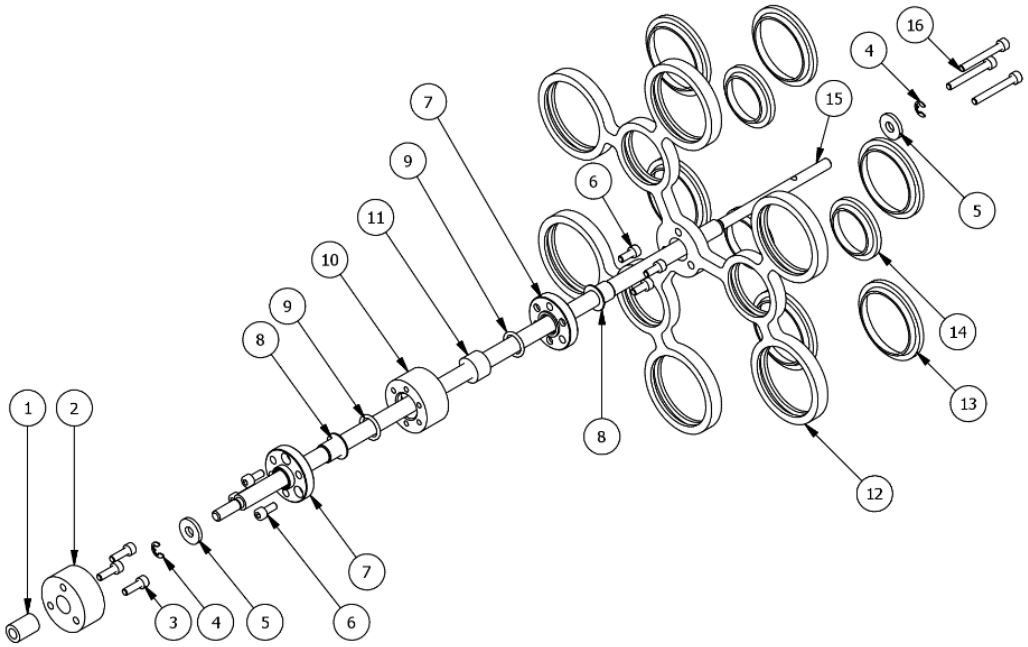

ITEM	PART NO.	DESCRIPTION
1	W2T873678	Wiper - Lead Screw Bush
2	W2T873679	Wiper - Lead Screw Bush Fixing Ring
3	-	M5 x 20 Sckt Head Bolt
4	W2T873769	12mm - Circlips Retaining Washer
	W2T873738	25mm - Circlips Retaining Washer
5	W2T873758	12mm – Wiper Washer
	W2T873739	25mm – Wiper Washer
6	-	M5 x 10 Sckt Head Bolt
7	W2T873756	12mm Shaft - Wiper Body Lid
	W2T873734	25mm Shaft - Wiper Body Lid
8	W2T873708	12mm - Flanged Bush
	W2T873711	25mm - Flanged Bush
9	Refer to Maintenance Spares List	EPDM 'O' Ring
10	W2T873755	12mm Shaft - Wiper Body
	W2T873733	25mm Shaft - Wiper Body
11	Refer to Maintenance Spares List	Lead Screw Nut
12	-	Wiper Carriage
13	Refer to Maintenance Spares List	49-Dia Wiper Rings
14	Refer to Maintenance Spares List	36-Dia Wiper Rings
15	-	ACME Wiper Shaft
16	-	M5 x 40 Sckt Head Bolt

Maintenance Spares List

ITEM	PART NO.	DESCRIPTION	SX-115-4	SX-215-5	SX-225-8	SX-425-10	SX-635-16	SX-850-20	SX-1250-20	SX-1873-30
General Assembly										
3	W2T874336	EPDM 'O' Ring 179.5 x 3 (6")	2	2						
3	W2T874305	EPDM 'O' Ring 229.3 x 5.7 (8")			2					
3	W2T874307	EPDM 'O' Ring 279.3 x 5.7 (10")				2				
3	W2T874292	EPDM 'O' Ring 379.3 x 5.7 (14")					2			
3	W2T874312	EPDM 'O' Ring 459.3 x 5.7 (18")						2	2	
3	W2T874316	EPDM 'O' Ring 730 x 7.0 (28")								1
12	W2T874342	36Dia Thimble Support Seal			1	2	3	4		9
13	W2T874344	49Dia Thimble Support Seal	1	2	2	4	6	8		18
Lamp & Quartz Assembly										
1	W2T873501	UV Lamp 1.5kW MP Ballast	1	2						
1	W3T477147	UV Lamp 2.5kW MP Ballast			2	4				
1	W2T873436	UV LAMP EB MP3535C49L0546					6			
1	W2T875325	UV Lamp EB MP5050C49L0700						8	12	
1	W2T873487	UV Lamp EB MP7373C49L0970								18
2	W2T874178*	Quartz Thimble QTH-49 x 400	1	2						
2	W2T874179*	Quartz Thimble QTH-49 x 445			2	4				
2	W2T874183*	Quartz Thimble QTH-49 x 545					6			
2	W2T874186*	Quartz Thimble QTH-49 x 700						8	12	
2	W2T874193*	Quartz Thimble QTH-49 x 975								18
3	W2T874279	EPDM 'O' Ring 49 x 5.0 v70	1	2	2	4	6	8	12	18
4	W2T874359	PTFE Clamp Ring Gasket (49.5 x 44.5 x 1)	1	2	2	4	6	8	12	18
5	W2T874283	EPDM 'O' Ring 59 x 2.0	1	2	2	4	6	8	12	18
FUV Sensor Housing Assembly										
3	W3T503464	O' Ring Seal EPDM 70 33 x 1.5	1	1						
UV Sensor Quartz Assembly										
1	W2T874166*	Quartz Thimble QTH-36 x 445			1	2				
1	W2T874168*	Quartz Thimble QTH-36 x 545					3			
1	W2T874170*	Quartz Thimble QTH-36 x 700						4	4	
1	W2T874171*	Quartz Thimble QTH-36 x 975								9
2	W2T874270	EPDM 'O' Ring 36 x 5.0 V70			1	2	3	4	4	9
3	W2T874358	PTFE Clamp Ring Gasket			1	2	3	4	4	9
4	W2T874278	EPDM 'O' Ring 46 x 2.0 V70			1	2	3	4	4	9
Automatic Wiper Drive Assembly (Bearing Housing)										
2	W2T874361	Nitrile Quad Ring 7.52 x 3.53			3	3	3	3	3	
2	W2T874366	Nitrile Quad Ring 19.99 x 5.33								3
3	W2T874362	PTFE Backing Ring 13.9OD x 8.1ID x 0.5Thk			1	1	1	1	1	
3	W2T874367	PTFE Backing Ring 29.9OD x 20.6ID x 1.6Thk (BS315)								1
4	W2T874258	EPDM 'O' Ring 21 x 2.0 V70			1	1	1	1	1	
4	W2T874269	EPDM 'O' Ring 36 x 2.0 V70								1

ITEM	PART NO.	DESCRIPTION	SX-115-4	SX-215-6	SX-225-8	SX-425-10	SX-635-16	SX-850-20	SX-1250-20	SX-1873-30
Automatic Wiper Carriage Assembly (Single-Lamp System)										
1	W2T873809	Wiper Bush (PTFE)	2	2						
5	W2T874361	Nitrile Quad Ring 7.52 x 3.53	2	2						
6	W2T874362	PTFE Backing Ring 13.9OD x 8.1ID x 0.5Thk	1	1						
7	W2T874374	PTFE - Wiper Washer	1	1						
11	W3T506772	FUV Wiper Flap	2	1						
13	W2T873674	SP Wiper Carriage Lead Screw Nut	1							
15	W2T874343	49-Dia Wiper Rings in 80 Shore EPDM	1							
Automatic Wiper Carriage Assembly (Multi-Lamp System)										
9	W2T874255	EPDM 'O' Ring 15.0 x 2.5 V70		2	2	2	2	2	2	
9	W2T874264	EPDM 'O' Ring 28 x 4 V70								2
11	W2T873757	12mm Shaft - Lead Screw Nut		1	1	1	1	1	1	
11	W2T873731	25mm Shaft - Lead Screw Nut								1
13	W2T874343	49-Dia Wiper Rings in 80 Shore EPDM		2	2	4	6	8	12	18
14	W2T875353	36-Dia Wiper Rings in 80 Shore EPDM			1	2	3	4	4	9

*Standard part shown. For non-standard options, please refer to the Data-book to confirm

ATUV-1040 Automatic Quartz Wiping System

IMPORTANT: This section of the manual is only applicable to systems that have an Automatic Wiping Mechanism installed on the chamber. If you are unsure whether your system has an Automatic Wiper Mechanism installed, please contact **Evoqua**.

General Operation

The ATUV-1040 module controls the operation of the automatic wiping mechanism. The system uses an infra-red optical sensor and a slotted disc connected to the wiper motor shaft to detect pulses of infra-red light as the shaft turns. The light pulses are converted to an electrical signal allowing the system to count the number of pulses and determine the length of the chamber and know the wiper's exact position within the chamber.

Upon applying power to the wiper module, a calibration check is performed. If the system is not calibrated, the module waits for the calibration process to be initiated. If the system is calibrated, the wiper will run automatically at a user-defined frequency.
If power is removed during a run, the wiper will resume running immediately when power is restored.

LED Indicators & Push Buttons



LED/Push Button	Description
OTPO PULSE (Optical Sensor Detector)	This LED is in series with the optical sensor's infra-red detector and will pulse on/off when the wiper motor shaft turns. **Note**: When the wiper motor is not running, this LED could be either OFF or ON depending on the position of the slotted disc relative to the optical sensor.
OPTO HTHY (Optical Sensor Emitter)	This LED is in series with the optical sensor's infra-red emitter and will be permanently lit when the emitter is functioning correctly.
LINK (Emergency Stop)	This LED will be on when the emergency stop input is active (closed). This LED ***MUST*** be on for the wiper motor to operate (run or calibrate).
STATUS (System Healthy/Fault Status)	This LED shows the following states: LED Off – System not calibrated. Slow Flash (once/second) – Wiper motor stalled or optical sensor failed. Fast Flash (5 times/second) – Wiper motor current has exceeded the trip current setting. LED Permanently On – System is healthy and calibrated.
CAL (Calibrate)	Press and hold for more than 0.5 seconds to initiate the calibration process.
RUN (Force Run)	Pressing this button for between 0.2s and 2s initiates a run. Pressing this button for between 4s and 6s initiates a run to the service position. **Note:** A run cannot be initiated unless the system is calibrated.

Connection Diagrams



Terminal	Description
1	No Connection
2	Optical Sensor Common
3	Optical Sensor Emitter
4	Optical Sensor Detector
5	Wiper Motor Positive
6	Wiper Motor Negative
7	Emergency Stop Input 1
8	Emergency Stop Input 2
9	Run/Calibrate Input 1
10	Run/Calibrate Input 2
11	System Healthy Output (Relay N/O contact)
12	System Healthy Output (Relay COM contact)

Important! The Motor and Optical Sensor connections are polarity conscious; care should be taken to ensure they are wired correctly at the terminals.

Note! The Emergency Stop and Run/Calibrate inputs are volt-free and are activated by connecting their respective inputs (1 & 2) together by a switch or relay.

Note! The system output relay is energised (contacts closed) when the system is healthy and calibrated.

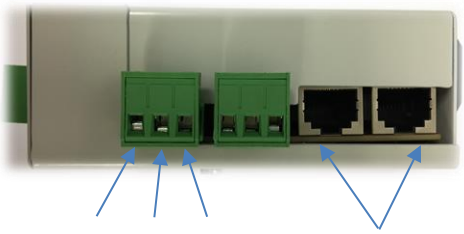

DIP-Switch Settings

DIPSW1 – System Setup Dip-Switch	
	This switch allows the operator to setup the wiper system to function correctly and with the correct wiping frequency. It also allows the operator to calibrate the wiper system

DIP 1 - 3 - Wiping Frequency Setup								
Frequency	**Never ***	**15 Mins**	**30 Mins**	**1 hour**	**2 Hours**	**6 Hours**	**12 Hours**	**24 Hours**
DIP1	OFF	OFF	OFF	OFF	ON	ON	ON	ON
DIP2	OFF	OFF	ON	ON	OFF	OFF	ON	ON
DIP3	OFF	ON	OFF	ON	OFF	ON	OFF	ON

***** If the Frequency is set to 'Never' (DIP1-3 = OFF), this allows the frequency of the wiper to be controlled via the Control System's Wiper Run Interval Parameter (Refer to Control Operation section of the Manual).

Important! DIP Switches 4 – 8 are for internal use only and should not be altered.

Calibration

For correct operation, the wiper must first be calibrated. Calibration allows the wiper module to determine the length of the chamber and park the wiper at the home position at one end of chamber. The calibration process is automatic but must be initiated in one of the following ways:

1. Send a Calibrate Command via the **Spectra** Control System Interface (Refer to Control Operation Section of Manual).
2. Pressing the calibrate button on the wiper module.
3. Activate the wiper module's Run/Calibrate digital input for between 4 and 6 seconds.

Once calibration is initiated, the status LED is extinguished and the wiper moves toward the end of the chamber nearest the home position. The optical detector LED will flash. Once the wiper reaches the end, the wiper's direction of travel is reversed and the wiper moves toward the opposite end of the chamber, recording the chamber's length as it travels. Once the opposite end of the chamber is reached, the wiper's direction of travel is reversed once again and the wiper moves back to the home position. On successful calibration, the status LED will be permanently lit and the system healthy relay energised (normally-open contacts will close).

Run

A run will automatically occur periodically once the wiper module is calibrated. The run frequency is determined by either the Wiper Run Interval parameter on Control Interface (Refer to Control Operation section of Manual), or SW1, SW2 and SW3 (see Section 'DIP Switch Settings').
A run can also be initiated in one of the following ways:

1. Send a Calibrate Command via the Control System Interface (Refer to Control Operation Section of Manual).
2. Pressing the run button on the wiper module
3. Activate the wiper module's Run/Calibrate digital input for between 0.2 and 2 seconds or for more than 8 seconds respectively

Note! Any attempt to initiate a run whilst the system is not calibrated or a run is already in progress is ignored.

Service Position

To facilitate removal of UV lamps during servicing, the wiper can be moved to a position 1/3rd along the chamber length from the home position in one of the following ways:

1. Select ed via the Wiper Service Position setting found in the Operator menu (Refer to Control Operation section of the Manual)
2. Press the RUN button on the wiper module for between 4 and 6 seconds.
3. Send a service command to the wiper module over the MODBUS communication interface (Refer to Control Operation section of the Manual)

TroubleShooting

Note: If a wiper fault is to occur, the Spectra Membrane interface will display 'Wiper Fault'. By pressing enter on this message, the fault can be diagnosed in more detail by pressing Enter.

Fault Description	Possible Cause	Possible Solution
Not Calibrated	Wiper has lost its calibrated memory The wiper has been put into service mode (STATUS LED is extinguished)	Follow Calibration Procedures (initiated in 3 possible ways)
Motor Current Trip	ATUV-1040 has detected an over current (STATUS LED Fast Flashing - 5 times/second). - Wiper mechanism is jammed. - Calibration has been lost/corrupted	Ensure the internal/external wiper parts are not causing the wiper jam/seize. The wiper shaft should be able to be rotated by hand Re-calibrate the Wiper
Loss Of Pulses	ATUV-1040 has detected a Loss of pulses error (STATUS LED Fast Flashing - 1 times/second). - **OPTO PULSE LED** does not flash when motor is turning	Check dust cover is in position. (Direct sunlight or a bright light can blind the opto sensor) Ensure the opto sensor is correctly positioned over the cam Ensure the motor is running when attempting a sweep.
Safety Stop	LINK LED on the ATUV-1040 has extinguished - LINK signal has been removed	Ensue the LINK signal is re-established and the LINK LED is illuminated
No Motor Current	The ATUV-1040 module is not measuring any current from the motor	Ensure the connections to the motor are properly installed Ensure the motor turns when 24Vdc is applied.
No Pulses	**OPTO PULSE LED** does not flash when motor is turning	Check dust cover is in position. (Direct sunlight or a bright light can blind the opto sensor) Ensure the opto sensor is correctly positioned over the cam Ensure the motor is running when attempting a sweep.
Minimum Chamber Length	Calibrated length is less than the pre-determined minimum	Ensure the internal/external wiper parts are not causing the wiper jam/seize. The wiper shaft should be able to be rotated by hand
Maximum Chamber Length	Calibrated length is greater than the pre-determined minimum	Check that the threads on the wiper carriage Lead Screw Nut have not worn allowing the shaft to rotate freely
Run Time Exceeded	Wiper has ran for longer than expected during calibration	Check that the threads on the wiper carriage Lead Screw Nut have not worn allowing the shaft to rotate freely

Maintenance Advice

The level and type of contamination within the fluid being treated and the frequency of wiping will define the frequency of maintenance action required, therefore the wiper system should be inspected frequently by a competent person to determine if the primary seal has broken-down.
Consult the Maintenance section of this manual for details on how to carry out maintenance of the Automatic Wiping system.

Spectra 3 Touch Operation V2

Spectra Touch Control System

Spectra is an automated control system developed by **Evoqua** to control and monitor the operation of its UV Disinfection systems.

Components

The Spectra Control system consists of the following components:

- Spectra Membrane (ATUV-1010)
- ATUV-1220 (I/O Module)
- ATUV-1040 (Wiper Module)
- ELC Ballast

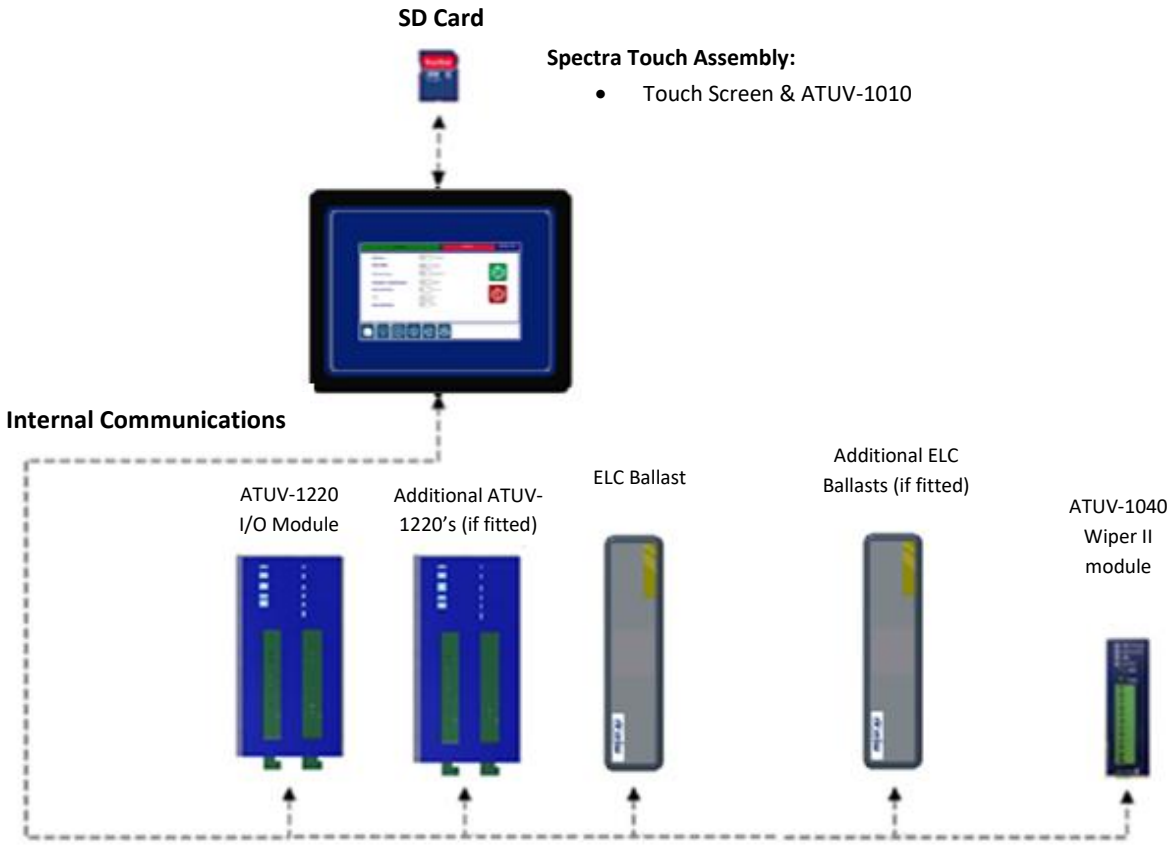

Spectra Touch Screen

Spectra II control panels are operated via the front utilising 7” Touch screen

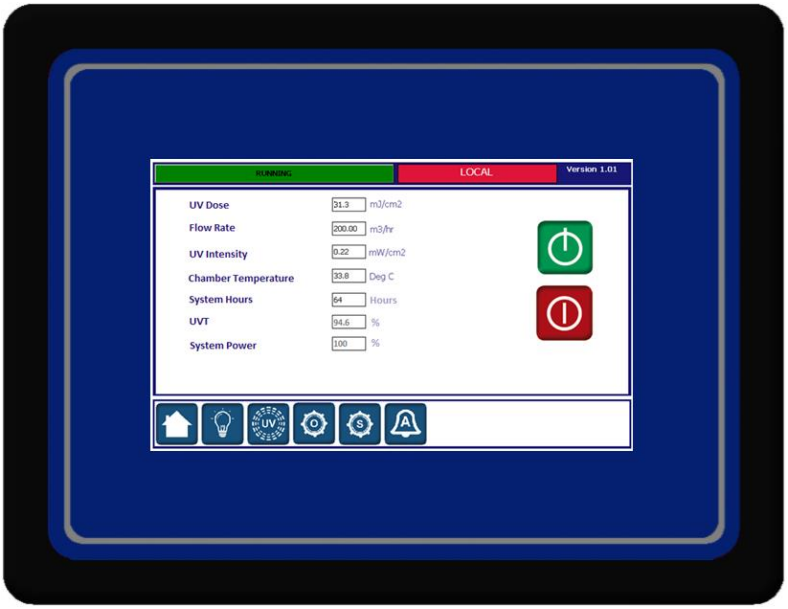

Feature	Description
	Pressing the Start button activates the start-up sequence, turning on the lamp(s). Note: Pressing Start will have no effect if: • A critical or fatal fault is active • Restrike timer (see below) is running • Spectra is in remote/comms control mode Note: This button will not be visible when any of the above are true
	Pressing the Stop button will turn off the lamp(s) and start the re-strike timer. This timer will inhibit the lamp(s) from being struck again for a defined period (usually 6-8 minutes) to allow a sufficient cool down time otherwise a strike failure may occur.

Status Indicator		
Description: Displays the running status of the system		
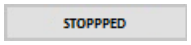	Solid Grey Background	System is stopped, all lamps are off
	Flashing Green Background	System is starting but has not met criteria to enter running mode.
	Solid green background	System is in running mode

Control Status Indicator		
Description: Displays the control status of the system, this is changed from the OPERATOR SCREEN.		
LOCAL	Solid red Background	System is in local control, start / stop buttons on overview screen are used
REMOTE	Solid blue background	System is in remote control, remote start / stop input is used (DI6 on ATUV-1020). For safety reasons the stop button is still available.
COMMS	Solid blue background	System can Start/Stop via external comms. For safety reasons the stop button is still available.

Navigation banner	
Description: Is visible from all screens and is used to navigate around the different screens.	
	Opens the home screen where the operator can view running details, start and stop the system when in local mode.
	Opens the lamp screen where the operator can view the status of the lamps, running hours and power levels etc.
	Opens the UV sensor screen where the operator can view the status of the UV sensors in mW/cm², milli-amps & percentage.
	Opens the operator screen where the operator can change key variables such as flow rate and remote operating.
	Opens the setup screen where trained personnel can login and change system variables including alarm and fault values etc.
	Opens the alarm screen where the operator can view and reset any outstanding alarms.
	Opens the Wiper screen (only visible if wiper type = Wiper II; Refer to the Wiper Operator menu) where the operator can view details about the wiper's status

ATUV1010 – Main Board

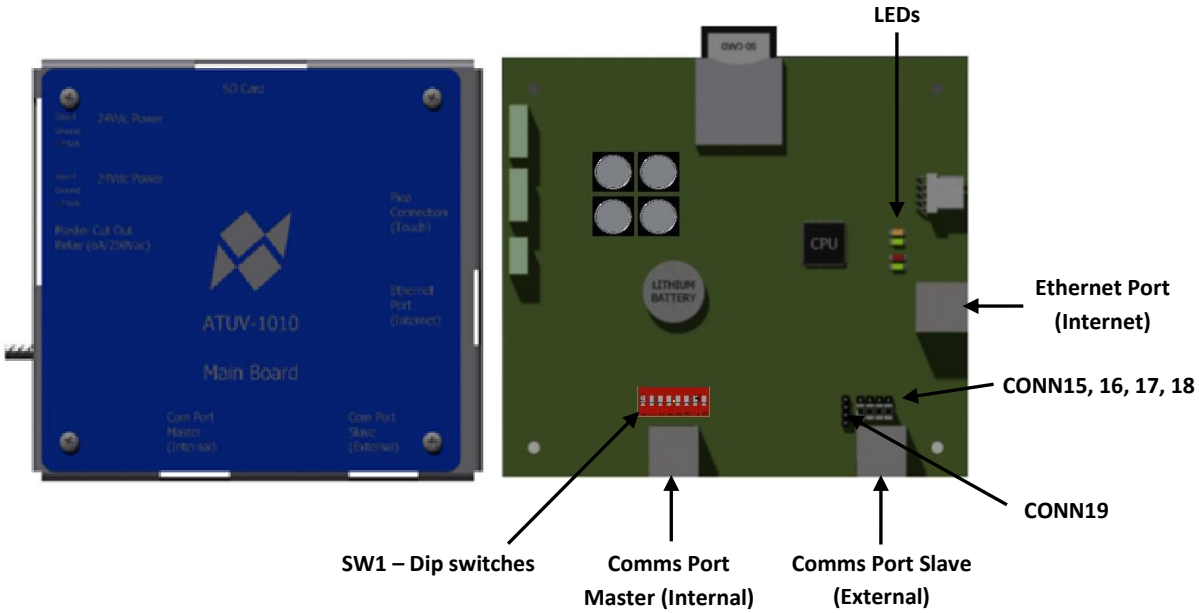

The ATUV-1010 board controls all critical operations including the system operation and customer communications and is the central part of the Spectra control system. All external modules including ATUV-1220, MP Ballast and ATUV-1040 (If fitted) are connected via an internal communications network. The ATUV-1010 also has a removable SD card used for storing various files for the Spectra to operate.

Comms Port Master (Internal)

This connection provides communications from the ATUV-1010 (Mainboard) to the ATUV-1220 (I/O Module) MP Ballast and ATUV-1040 (If fitted) via a RJ45 connection.

Comms Port Slave (External)

This connection provides communications from an external Modbus RTU device (master) with the Spectra operating as a slave device with use of an RJ45 connection using Modbus Protocol. The master device should initiate communications, while the Spectra responds to requests accordingly for data or an action to be taken. The Spectra can be assigned a MODBUS SLAVE ADDRESS ranging from 0-99 when being used as a slave on a network. For further information, please refer to the **Modbus Communication** Section.

Ethernet Port (Internet)

This connection enables the system to monitor and review the Spectra data over the internet. This can be achieved by either using an Ethernet connection with internet access or a Wi-Fi adapter to connect to a Wi-Fi with internet access.

LED's

The Main board has 4 that are used for status indication.

From Top to Bottom:

LED	Description	Status	Indication
3	(Internal Use Only)		
4	This LED indicates if there is power to the Spectra	ON	Power to the Spectra
		OFF	No power to the Spectra
1	This LED indicates the software status	ON	Software successfully loaded & running correctly
		OFF	Software load fault
		FLASHING	Software loading
2	This LED indicates the status of the SD card	ON	SD card healthy
		OFF	SD card not healthy or not found

Headers

The ATUV-1010 has various headers which are used to configure the communications internally and externally.

COMM Port Master (Internal Use Only)

SW1 – Dip Switches

These dip switches are for internal use only and should not be altered.

COMM Port Slave (External)

CONN15, 16, 17, 18

These pins are used to reverse the polarity of Rx and Tx. As standard, headers should be placed on bottom 2 pins as illustrated in the image above. (For more information, refer to the Modbus Communication section).

CONN19

These pins are used to select between 4 wire interface and 2 wire interface. (For more information, refer to the Modbus Communication section).

SD Card

The SD card stores everything the Spectra needs to function. It stores all the systems variables, the menu structure, the version of Spectra program and log files (if enabled).

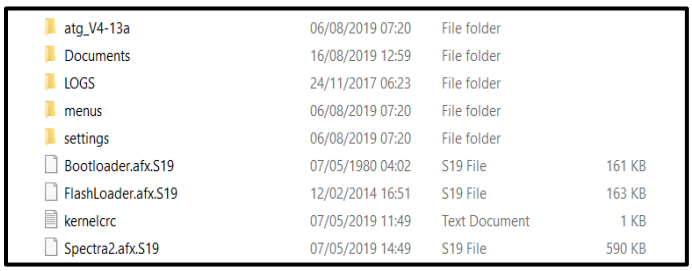

XML Notepad 2007 software is required to edit certain information and variables (.xml files) and can be downloaded for free from the Download Centre on the Microsoft website.

SD Card Files

Setting Files

The following file stores the system parameters:

Config.xml - This file stores all the system parameters. Current variables can be altered using XML Notepad simply by opening the file and selecting the desired variable to be changed from the relevant location. For example, see illustration below for editing Flow Rate:

Note: When the desired variable/s has been altered, save and close the file.

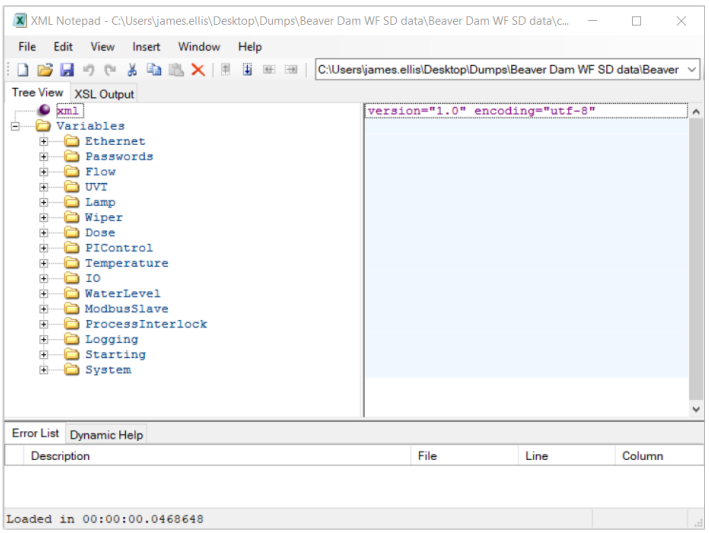

Menu Files

This folder stores all the information relating to the menu structures that appear on the 4 line OLED display. This information is factory set and should not be altered.

Software Files (Also located on the Root of the SD Card)

This folder contains the Spectra Software programs. These files should not be altered.

Log Files

The following files are not of use to the user, but may be used in the unlikely event of a malfunction.
Logfile(1).csv - These files store all the data logs. Each CSV file will contain 1000 records with the latest file being the highest number (For example once Logfile1 reaches 1000 records then Logfile2 will be created.)

I/O Module (ATUV-1220)

The I/O Module is the main interface module and is located inside the panel consisting of various Analogue/Digital inputs and outputs:

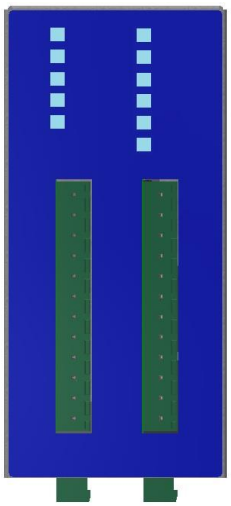

LEDs

The Digital Input & Output LED lights illuminate when energised and extinguish when de-energised.

For the **Analogue Inputs (UV1, UV2 & AI1)**, each LED indicates the following:

Condition	Range
ON	> 3.5 mA
Flashing	> 2mA, < 3.5 mA
OFF	< 2mA

For the **Analogue Outputs**, the following LED's indicate:

Output	Status
AO1	Communications to the ATUV-1010 (mainboard) is healthy

To ensure the system is healthy, AO1 LED should be illuminated.

Inputs/Outputs

Below details the I/O available for **1** I/O Module installed:

ATUV 1220 I/O Module # 1

ATUV 1220 I/O Module – Analogue Inputs	
ANALOGUE INPUT (4-20mA)	
UV1 -	**UV INTENSITY PROBE 1**
Used to connect a 4-20mA output from the UV intensity Probe.	
UV2 -	**UV INTENSITY PROBE 2**
Used to connect a 4-20mA output from the UV intensity Probe.	
AI1	**SELECTABLE INPUT 1**
Selectable Input – See SETUP MENU SCREEN – COMMS & I/O	
TEMP	**CHAMBER TEMPERATURE INPUT**
Used to connect a Temperature sensor (PT100) to measure the temperature at the wall of the chamber.	

ATUV 1220 I/O Module – Analogue Outputs	
ANALOGUE OUTPUTS (4-20mA)	
AO1 -	**Selectable Output 1**
Selectable Output – See SETUP MENU SCREEN – COMMS & I/O	

ATUV 1220 I/O Module – Digital Inputs	
DIGITAL INPUTS – For use with Volt Free Contacts – Signal Voltage 24Vdc	
DI1 -	**Selectable Digital Input 1***
Selectable Input – See SETUP MENU SCREEN – COMMS & I/O	
DI2 -	**Selectable Digital Input 2****
Selectable Input – See SETUP MENU SCREEN – COMMS & I/O	
DI3 -	**Selectable Digital Input 3*****
Selectable Input – See SETUP MENU SCREEN – COMMS & I/O	

*Input is set to **REMOTE START/STOP** as Default

ATUV 1220 I/O Module – Digital Outputs	
DIGITAL OUTPUTS – Volt Free Contacts 250Vac 3Amp max.	
DO1 -	**Selectable Output 1**
Selectable Output – See SETUP MENU SCREEN – COMMS & I/O	
DO2 -	**Selectable Output 2**
Selectable Output – See SETUP MENU SCREEN – COMMS & I/O	
DO3 -	**Selectable Output 3**
Selectable Output – See SETUP MENU SCREEN – COMMS & I/O	

Below details the I/O available for **2** I/O Module's installed:

ATUV 1220 I/O Module # 1	ATUV 1220 I/O Module # 2

ATUV 1220 I/O Module – Analogue Inputs			
ANALOGUE INPUT (4-20mA)			
UV1 - UV INTENSITY PROBE 1		**UV1 - UV INTENSITY PROBE 3**	
Used to connect a 4-20mA output from the UV intensity Probe.		Used to connect a 4-20mA output from the UV intensity Probe.	
UV2 - UV INTENSITY PROBE 2		**UV2 - UV INTENSITY PROBE 4**	
Used to connect a 4-20mA output from the UV intensity Probe.		Used to connect a 4-20mA output from the UV intensity Probe.	
AI1	**FLOW**	**AI1**	**UVT**
Selectable Input – See SETUP MENU SCREEN – COMMS & I/O		Used to connect a 4-20mA output from the UVT Meter.	
TEMP	**CHAMBER TEMPERATURE INPUT**	**TEMP**	**Not Used**
Used to connect a Temperature sensor (PT100) to measure the temperature at the wall of the chamber.			

ATUV 1220 I/O Module – Analogue Outputs			
ANALOGUE OUTPUTS (4-20mA)			
AO1 - DOSE		**AO2 - UV INTENSITY**	
Selectable Output – See SETUP MENU SCREEN – COMMS & I/O		Used to replicate the (4-20mA) Average UV Intensity	

ATUV 1220 I/O Module – Digital Inputs			
DIGITAL INPUTS – For use with Volt Free Contacts – Signal Voltage 24Vdc			
DI1 - REMOTE START/STOP		**DI1 - Water Level Healthy**	
Selectable Input – See SETUP MENU SCREEN – COMMS & I/O		Used to monitor the water level in the Chamber	
DI2 - BOOST		**DI2 - Reset Alarms**	
Selectable Input – See SETUP MENU SCREEN – COMMS & I/O		Used to Reset Alarms/Faults	
DI3 - PROCESS INTERLOCK - INTERRUPT		**DI3 - Low Power**	
Selectable Input – See SETUP MENU SCREEN – COMMS & I/O		Used to force the system into Low Power mode	

ATUV 1220 I/O Module # 1	ATUV 1220 I/O Module # 2

ATUV 1220 I/O Module – Digital Outputs			
DIGITAL OUTPUTS – Volt Free Contacts 250Vac 3Amp max.			
DO1 -	**Selectable Output 1**	**DO1 -**	**Selectable Output 1**
Selectable Output – See SETUP MENU SCREEN – COMMS & I/O		Selectable Output – See SETUP MENU SCREEN – COMMS & I/O	
DO2 -	**Selectable Output 2**	**DO2 -**	**Selectable Output 2**
Selectable Output – See SETUP MENU SCREEN – COMMS & I/O		Selectable Output – See SETUP MENU SCREEN – COMMS & I/O	
DO3 -	**Selectable Output 3**	**DO3 -**	**Selectable Output 3**
Selectable Output – See SETUP MENU SCREEN – COMMS & I/O		Selectable Output – See SETUP MENU SCREEN – COMMS & I/O	

Connections

Below shows the ATUV-1220 terminal connections depending on whether 1 or 2 I/O modules are installed:

1 X ATUV 1220 I/O MODULE

I/O Module # 1

Terminal	Header 1 Analogue In/Out			Header 2 Digital In / Out		
1	UV1	UV1	+	DI1	Selectable Digital Input 1	+
2			-			-
3	UV2	UV2	+	DI2	Selectable Digital Input 2	+
4			-			-
5	AI1	Selectable Analogue Input 1	+	DI3	Selectable Digital Input 3	+
6			-			-
7	AO1	Selectable Analogue Output 1	+	DO1	Selectable digital Output 1	
8			-			
9		N/A		DO2	Selectable digital Output 2	
10	TEMP	Chamber Temp (PT100) (Internal Use)	+			
11			+	DO3	Selectable digital Output 3	
12			-			

2 X ATUV 1220 I/O MODULE

I/O Module # 1

Terminal	Header 1 Analogue In/Out			Header 2 Digital In / Out		
1	UV1	UV1	+	DI1	Remote Start/Stop	+
2			-			-
3	UV2	UV2	+	DI2	Boost	+
4			-			-
5	AI1	Flow	+	DI3	Process Interlock	+
6			-			-
7	AO1	Dose	+	DO1	Selectable digital Output 1	
8			-			
9		N/A		DO2	Selectable digital Output 2	
10	TEMP	Chamber Temp (PT100) (Internal Use)	+			
11			+	DO3	Selectable digital Output 3	
12			-			

I/O Module # 2

Terminal	Header 1 Analogue In/Out			Header 2 Digital In / Out		
1	UV1	UV3	+	DI1	Water Level Healthy	+
2			-			-
3	UV2	UV4	+	DI2	Reset Alarms	+
4			-			-
5	AI1	UVT	+	DI3	Low Power	+
6			-			-
7	AO1	UV Intensity	+	DO1	Selectable digital Output 1	
8			-			
9		N/A		DO2	Selectable digital Output 2	
10	TEMP	N/A				
11				DO3	Selectable digital Output 3	
12						

ELC Ballast

The ELC (Electronic Lamp Controller) is a device used to control the power to the UV lamp. The ELC operates at high frequencies (approx. 100 kHz) being used in conjunction with medium pressure lamps ranging from 3.5kW to 12.0kW.



Display

The ELC has a display that can be used to check connection configurations from the spectra to the ELC, and if any errors exist. If an error does occur on the ELC, the display will blink with the error being displayed in clear text – with the Spectra display also mimicking the same error.

Menu Structure

There are 3 main menus on the ELC ballast display which are described below
Pressing the SET button once will scroll through the menus.

Menu	Description
	**The first line gives account of the system status. As long as the ELC is free of defects/faults it will display 'ELC Ready'.** The second line shows on the left side the status of the bus connection, on the right side the appointed bus address
 	**This menu displays the status of the Lamp.** **When the lamp is running, this menu will display the Power set value (PSet) and real-time Power value (PLamp).**
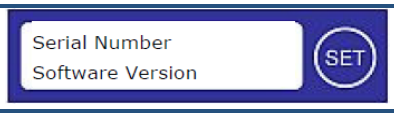	**The next menu displays the serial number and software version currently installed on the ballast.**

ELC Modbus Address

The ELC supports both Profibus & Modbus Communications Protocol which are both incorporated into the ELC ballasts. The Spectra control system communicates to the ELC ballast via Modbus.

To set-up each ELC Modbus address, the display and the pertaining SET button are used. The address extends from 01hex (01dec) to 7Dhex (125dec).

The ELC Start Address = 14hex (20Dec) and proceeds' consecutively.

Menu	Procedures
	'No Bus' is displayed when the ELC has not been assigned a correct comms address. To set the ELC Modbus register, Hold set > 5 secs
	To select between Profibus & Modbus, press SET once
	When Modbus is being displayed, select by holding SET (>2 secs)
	To increment the high nibble, press the SET button (<2 secs) once per step
	As soon as the desired value of the high nibble is reached, hold the SET button (>2 secs) to jump to the low nibble
	To increment the low nibble, press the SET button (<2 secs) once per step
	When the desired address is selected, Hold the SET button (>2 secs) to return to the main Menu
	When the correct address has been set, the display should read 'Modbus OK' with the assigned Modbus address

ELC Ballast Address'

Ballast Number	Address (Hex)	Ballast Number	Address (Hex)
1	14	10	1D
2	15	11	1E
3	16	12	1F
4	17	13	20
5	18	14	21
6	19	15	22
7	1A	16	23
8	1B	17	24
9	1C	18	25

Connections

To gain access to the ELC's electrical contacts/connections, the front cover will require removing. This is done by removing the 4 x Tx20 screws located in the positions illustrated below using a slim line Tx20 driver.

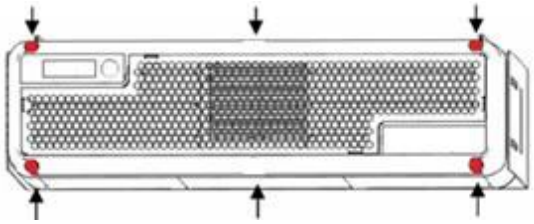

Note: Please ensure the Ballast is electrically isolated upon removing the front cover

When the screws have been removed, the front cover will be able to slide off exposing the electrical contacts/connections as illustrated below.

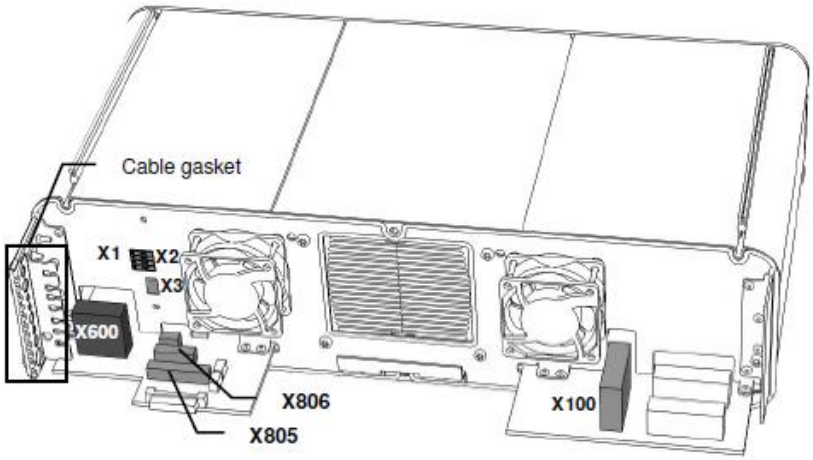

Connection	Description
X1	**Modbus Comms Input**
X2	**Modbus Comms Output**
X100	**Mains Lamp Connection (400VAC)**
X600	**Lamp Output Connection**
X805	**Control mains (24VDC)**
X806	**Control Connection**

Start-up Sequence

The following conditions must be achieved for the system to go into Running Mode:

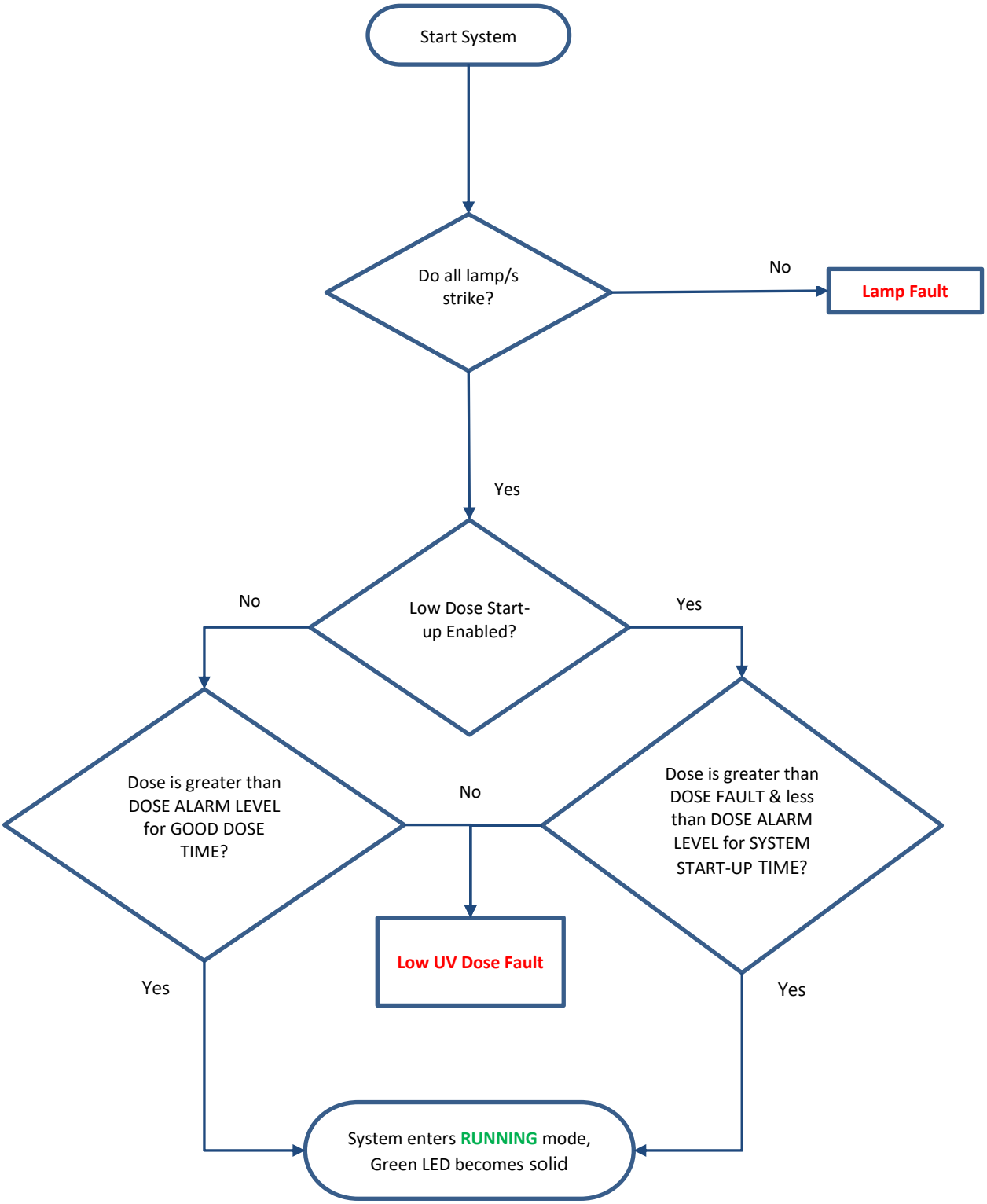

Spectra Touch Operation

Navigating the Main Information Screens

Additional functions of the SPECTRA Touch are accessed via the different windows on the touch screen.

Lamp Menu Screen



Pressing on the lamp Icon will display the lamp screen. This screen shows the status of each lamp including its lamp Power, current, voltage, lamp run hours & number of lamp strikes.

Lamp/Ballast Faults are also displayed in this window and will highlight red if the specific fault has occurred (Refer to the **Fault Screen** Section for more details regarding these faults).

Pressing on the individual lamp will cause the lamp details popup window to be displayed.

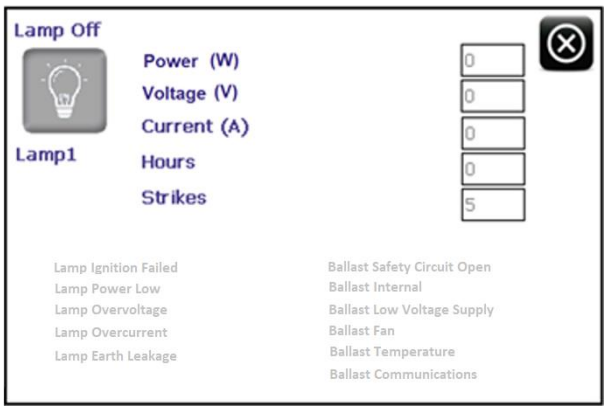

Pressing the cross or anywhere outside the window close the popup window.

Intensity Menu Screen



Pressing on the UV Icon will display the UV Input screen. This screen gives the input from each UV monitor installed on the system.

Pressing on the individual UV sensor will cause the sensor details popup window to be displayed.

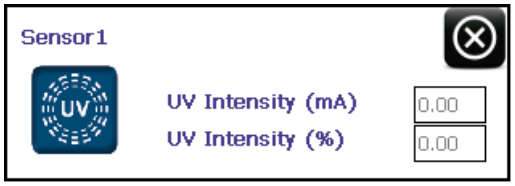

Pressing the cross will close the popup window.

Operator menu Screen



This menu screen contains easy access operator adjustable parameters.

Menu	Variable
Operator	Local / Remote / Comms
	Fixed Flow Rate
	Flow Meter Source
	Control Mode
	Calibrate Wiper
	Force Wiper Run
	Wiper Service Position

OPERATOR	>	LOCAL / REMOTE	
Description: Used to select how to start/stop the system either locally or remotely			
Selectable Values	*	Local	System can only Start/Stop by pressing Start on the Spectra
		Remote	System can Start/Stop remotely via a closed hardwired signal into DI6 on ATUV-1020. Can also be stopped via the Spectra for emergency purposes.
		Comms	System can Start/Stop via external comms. Can also be stopped via the Spectra for emergency purposes.

FLOW	>	FIXED FLOW RATE
Description: This value will be used as the flow rate during the start-up period. If no flow meter is set up this value will be used as the constant flow rate.		
Selectable Values	0-9000	m^3/hr
	0-943.5	BPM
	0-57.1	MGD
	0-39624.5	GPM
	0-216	Ml/d
	0-2499.5	l/s

OPERATOR	>	FLOW SOURCE	
Description: Used to select what flow meter value is to be used when the system is in running mode. During start-up FLOW RATE will always be used			
Selectable Values	*	FIXED	Fixed Value
		ANOLOGUE	4-20 mA Flow Meter Input
		COMMS	Flow Signal via Comms

OPERATOR	>	POWER CONTROL MODE	
Description: Used to select the power control required			
Selectable Values	*	FULL POWER	Force panel to full power
		VARIABLE POWER	Controls Lamps around DOSE SET-POINT
		HALF POWER	Force panel to Half power

OPERATOR	>	CALIBRATE WIPER*
Description: Used to initiate the Wiper calibration process.		
Selectable Values	*	No
		Yes

*Only visible if “Wiper Type” = “Wiper II”.

OPERATOR	>	FORCE WIPER RUN*
Description: Used to force the wiper to perform a full sweep.		
Selectable Values	*	No
		Yes

*Only visible if “Wiper Type” = “Wiper II”.

OPERATOR	>	WIPER SERVICE POSITION*
Description: Used to park the wiper carriage 30% the length of the chamber to assist with quartz extraction during maintenance. **Note:** When performing this function, the Wiper will loose its calibration memory, therefore will require re-calibrating when maintenance is complete.		
Selectable Values	*	No
		Yes

*Only visible if “Wiper Type” = “Wiper II”.

Fault Screens



Pressing on the Alarm Icon will display the Alarm screen. This screen will show any current alarms and gives the user the ability to reset the alarms if there is a fault.

Pressing the reset button will clear any alarms that can be cleared. If the reason for the fault still exists (For instance the UV Reactor is still over the temperature fault level) then the error will re-appear and will not be able to be reset.

The tables below describe the 3 different types of faults that the Spectra II displays:

- Fatal Faults
- Critical Faults
- Non-Critical Alarms

Fault Screen Descriptions		
Fatal Faults - Shuts the system down and will require a manual reset before the system can be restarted		
	I/O Communications Watchdog	
		Communications to the common IO module has been lost
	Electronic Ballast Communications Watchdog	
		Communications to the Electronic Ballast has been lost
	Local Stop Fault	
		The unit has been stopped using the local stop button when selected to remote run. Press reset to allow the unit to restart from remote. For safety reasons this alarm is not resettable via the Modbus communications if fitted.
Critical Faults - Shuts the system down and will require a manual reset before the system can be restarted.		
	Control Panel Over Temperature	
		Control Panel has exceeded its CONTROL PANEL TEMP FAULT set point.
	UV Reactor Over Temperature	
		Chamber Temperature has exceeded FAULT TEMPERATURE set point.
	Ballast/Lamp Fault	
		Lamp Ignition Failed - ELC is unable to ignite the lamp **Lamp Low Power** - The lamp has extinguished on its own during operation **Lamp Overvoltage –** Voltage exceeds ignition voltage **Lamp Overcurrent –** Current has exceeded current limit **Lamp Earth Leakage -** Earth Leakage detected in lamp side circuit **Ballast Safety Circuit Open -** The Safety Circuit on the ballast/s has opened. **Ballast Internal -** ELC has experienced an internal error **Ballast Low Supply Voltage –** Low or fluctuating supply voltage to ballast **Ballast Fan -** Lamp driver fan fault or incorrect RPM **Ballast Temperature -** Ballast internal temperature outside operational range **Ballast Communications -** Communications to the Spectra has failed.

Fault Screen Descriptions (Cont.)		
	Low UV Dose	
		Actual Dose is less than DOSE FAULT LEVEL for low dose time.
	Process Interlock Shutdown	
		The Process Interlock input has de-energised whilst unit was running. The unit will require a manual reset to re-start.
	Water Level Low	
		Water level has dropped below allowable level
	SD Card Not Inserted	
		SD card is not inserted or corrupt
	I/O Module Not Calibrated	
		ATUV-1220 requires calibrating
	I/O Modules Less Than Expected	
		Number of I/O modules detected less than specified
	Electronic Ballasts Less Than Expected	
		Number of Electronic Ballasts detected less than specified
	Flow Meter Out of Range	
		The flow meter input is outside the 4mA and 20mA tolerances
Non-Critical Alarms – Displays the Fault/Alarm but will allow the system to continue running		
	Process Interlock Interrupt	
		The Process Interlock input has de-energised whilst unit was running. The unit will re-start after the signal is regained and the re-strike period has elapsed.
	Low UV Dose	
		Actual Dose is less than DOSE ALARM LEVEL for low dose time.
	Wiper	
		Triggered by loss of Unit Healthy output from quartz wiper unit. If ATUV-1040 is fitted, press Enter to review the fault in more detail. Refer to the Automatic Wiping section of the manual.
	Lamp Approaching End of Life	
		Lamp run hours have exceeded lamp life set point and is recommended to be replaced.
	UV Reactor Over Temperature	
		Chamber Temperature has exceeded ALARM TEMPERATURE set point.
	Power Loss When Running	
		Power to the system has been lost while the lamp were running

The Spectra also displays other priority information that the operator may find useful:

OTHER PRIORITY SCREENS		
	Re-Strike Timer Running	
		Indicated the restrike time remaining until the lamps can be re-struck

Note: For details on how to Troubleshoot the above faults, please refer to the Troubleshooting section at the end of this Manual

Wiper Screen



Pressing on the wiper icon will display the wiper screen. This screen displays the wiper status and information about its performance.

Note: this icon will only be visible if the wiper type is Wiper II (refer to the Wiper Operator menu).

Changing Variables

There are a number of different types of variables and they are adjusted using standardized pages.

The variable is only stored once the OK button is pressed.

Pressing ESC on any of these screens will cancel the change variable command.

Alpha Variable Screen



Numeric Variable Screen

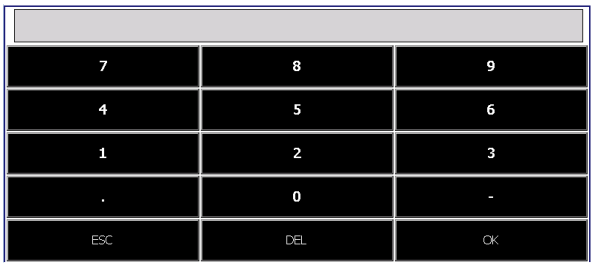

Lamp or UV Select Variable Screen

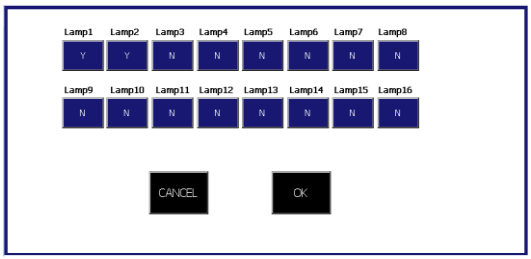

Press the individual lamp Icon to toggle the status Y or N.
Y = Selected, N = Not Selected.

Option Screen

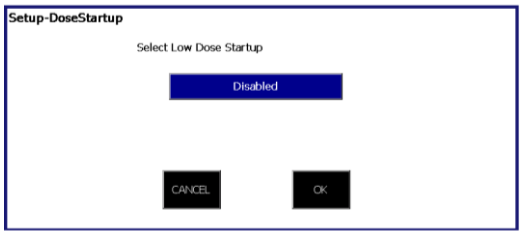

Press the blue button to toggle the status.
When the correct setting is displayed press ok to confirm this.

Setup Menu Screens



The Setup Menu Screens allow the operator to alter the way the system will run by changing the system variables

Warning – Altering variables can stop the system working correctly: only suitably qualified persons should alter any of the system variables

- To enter the setup menu screen as an operator, select the Setup Icon
- Enter the **A T G** Password using the up and down arrows and the enter key
- Pressing clear at any point will return you back you to the main screens

MENU	VARIABLE	MENU	VARIABLE	
			1 x I/O Module	2 x I/O Module
FLOW	Fixed Flow Rate	COMMS and I/O	Analogue Output 1 Source	I/O Module 1 – Digital 0utput 2 & 3 Source
	Flow Units		Digital Input 1, 2 & 3 Source	I/O Module 2 – Digital Input 1, 2 & 3 Source
	Flow Source		Digital Output 2 & 3 Source	
	Flow Meter Max		Water Level Low Delay	
LAMP	Minimum Power		Modbus Slave Address	
	Maximum Power		DHCP	
	Restrike Time		IP Settings	
	Lamps/Bank In Use 1-16		DNS	
	Lamps/Bank In Use 17-32			
	Reset Individual Lamp hours	PROCESS INTERLOCK	Process Interlock Mode	
	Reset All Lamp Hours		Process Interlock Action	
DOSE	Dose Units		Process Interlock Delay	
	Dose Set-Point	WIPER	Wiper Type	
	Dose Alarm		Wiper Run Interval	
	Dose Fault		Wiper Low Dose Time	
	Good Dose Time		Wipe on Low Dose	
	Low Dose Time	UVT	UVT Source	
	Low Dose End Time		Fixed UVT	
	Low Dose Start-up		UVT Meter Max	
	UV Sensors In Use	MISCELLANEOUS	Auto Restart	
	Intensity Units		Change Password?	
	UV Sensor Max		Time	
	UV Dose Max		Date	
	Low Power Sw. Mode		Reset Defaults	
	Low Power Timing			
	Low Power Set-Point			
TEMPERATURE	Temperature Units			
	Chamber Temperature Alarm			
	Chamber Temperature Fault			
	Chamber Temperature Alarm Dead-band			
	Panel Temperature Fault			

Setup Menu - Parameter Descriptions

Flow



FLOW	>	FIXED FLOW RATE	
Description: This value will be used as the flow rate during the start-up period. If no flow meter is set up this value will be used as the constant flow rate.			
Selectable Values		0-9000	m^3/hr
		0-943.5	BPM
		0-57.1	MGD
		0-39624.5	GPM
		0-216	Ml/d
		0-2499.5	l/s

*For default Fixed Flow Rate refer to Product Flow Information Table in the **Installation, Commissioning & Calibration** Section

FLOW	>	FLOW UNITS	
Description: Used to select which flow units are required.			
Selectable Values	*	m^3/hr	Cubic metres per hour
		BPM	Barrels per minute
		MGD	Million gallons (US) per day
		GPM	Gallons (US) per day
		Ml/d	Million litres per day
		l/s	Litres per second

FLOW	>	FLOW SOURCE	
Description: Is used to select what flow meter value is to be used when the system is in running mode. During start-up FLOW RATE will always be used.			
Selectable Values	*	STATIC FLOW	Fixed Value
		COMMS	Flow Signal via Comms
		FLOW METER	4-20mA Flow Meter Input

FLOW	>	FLOW METER MAX	
Description: Used to convert flow meter input (in mA) to the actual flow rate. The flow meter reading at 20 mA should be entered.			
Selectable Values	*	0-9000	m^3/hr
		0-943.5	BPM
		0-56.9	MGD
		0-39624.5	GPM
		0-216	Ml/d
		0-2499.5	l/s

Lamp



LAMP	>	MINIMUM POWER	
Description: Used to set the minimum power for the lamp. (Minimum power can be set to 20% of Max power of the ELC)			
Selectable Values	1601 – 8000		Watts

LAMP	>	MAXIMUM POWER	
Description: Used to set the maximum power for the lamp.			
Selectable Values	1601 – 8000		Watts

LAMP	>	RESTRIKE TIME	
Description: Used to set the time required for the lamp to cool sufficiently to allow re-strike. (This value is usually set to 6 or 8mins depending on lamp type)			
Selectable Values	0 – 60		Minutes

LAMP	>	LAMPS/BANKS IN USE 1 - 16
Description: Used to select which lamps should be used.		
LMP = 1234 USE =YYYY	Use the up and down arrows to select Y to use the lamp and N to disable it. Press enter to move to the next lamp and confirm the selections.	

LAMP	>	LAMPS/BANKS IN USE 17 - 32
Description: Used to select which lamps should be used.		
LMP = 1234 USE =YYYY	Use the up and down arrows to select Y to use the lamp and N to disable it. Press enter to move to the next lamp and confirm the selections.	

LAMP	>	RESET LAMP HOURS
Description: Is used to reset individual lamp life hours and strikes upon replacing a specific lamp. Use the up and down arrows to scroll through the different lamps and press enter to select Yes to reset the hours for that particular lamp.		
Selectable Values	Yes	
	No	

Dose



DOSE	>	DOSE UNITS	
Description: Working DOSE units can be selected.			
Selectable Values	*	mJ/cm^2	
		J/m^2	
		J/cm^2	

DOSE	>	DOSE SET-POINT	
Description: Used to set the target Dose. (Used for control mode)			
Selectable Values		0 – 5,000	mJ/cm^2
		0 – 50,000	J/m^2
		0.00 – 5.00	J/cm^2

DOSE	>	DOSE ALARM	
Description: When the measured dose drops below the alarm value for LOW DOSE TIME, the unit will display a non-critical alarm and will continue to run.			
Selectable Values		1 – 5,000	mJ/cm^2
		1 – 50,000	J/m^2
		0.01 – 5.00	J/cm^2

DOSE	>	DOSE FAULT	
Description: When the measured dose drops below the fault value for LOW DOSE TIME, the unit will display a critical alarm and will shut down. DOSE FAULT LEVEL must be less than DOSE ALARM LEVEL			
Selectable Values		0 – 5,000	mJ/cm^2
		0 – 50,000	J/m^2
		0.00 – 5.00	J/cm^2

DOSE	>	GOOD DOSE TIME	
Description: The measured Dose must be greater than the ALARM LEVEL for the GOOD DOSE TIME in order for the system to switch into Running mode. (This value is usually set to 15)			
Selectable Values		0 – 120	Seconds

DOSE	>	LOW DOSE TIME	
Description: This variable sets the length of time the measured dose can drop below the Alarm or Fault values before activating the Alarm or Fault. (This value is usually set to 30)			
Selectable Values		0 – 60	Seconds

DOSE	>	LOW DOSE END TIME	
Description: Sets the length of time a measured good dose must be seen in order to end the low dose timer and set the system back to normal running conditions.			
Selectable Values	*	10-15	Seconds

DOSE	>	LOW DOSE STARTUP	
Description: Used to define whether the system will go into running mode if the measured dose is greater than FAULT LEVEL but less than ALARM LEVEL. If enabled the unit will go into running mode once FAULT LEVEL has been exceeded for 5 mins, but the Low dose alarm activate if ALARM LEVEL is not reached. (This value is usually set to Disabled)			
Selectable Values	*	Disabled	
		Enabled	

DOSE	>	UV SENSORS IN USE
Description: Used to select which sensors should be used.		
SNSR = 1234 USE =YYYY		Use the up and down arrows to select Y to use the sensor and N to disable it. Press enter to move to the next sensor and confirm the selections.

DOSE	>	INTENSITY UNITS	
Description: Working INTENSITY units can be selected.			
Selectable Values	*	mW/cm²	
		W/m²	

DOSE	>	UV SENSOR MAX	
Description: Used to convert UV sensor input to the actual UV intensity. The UV reading at 20 mA should be entered.			
Selectable Values	0 – 1,000		mW/cm^2
	0 – 10,000		W/m^2

DOSE	>	UV SENSOR MAX	
Description: Used to convert UV sensor input to the actual UV intensity. The UV reading at 20 mA should be entered.			
Selectable Values	0 – 1,000		mW/cm^2
	0 – 10,000		W/m^2

COMMS	>	UV DOSE MAX
Description: The value selected equates to 20mA output. Used if the Analogue Output is set to **DOSE**.		
Selectable Values	0 - 5000	

DOSE	>	LOW POWER SWITCH MODE	
Description: Used to define how the system switches into one of two low power mode when the external Low Power signal (DI2/DI3) has been energised on the ATUV-1220. The system will enter into low power mode (control delay time expired) and then scale various variables according to the LOW POWER S-P. The original value is multiplied by the LOW POWER S-P (%) to attain the new value.			
Selectable Values		DISABLED	External Low Power switch is turned off.
	*	DOSE REDUCTION MODE	Used when less treatment is required. The DOSE SET POINT, ALARM and FAULT are all reduced to a defined percentage (this is set in LOW POWER S-P).
		FLOW REDUCTION MODE	Used when the flow rate through the system is reduced and the same level of treatment is required. The flow will reduce from the FLOW RATE to a defined percentage of the FLOW RATE (which is set in LOW POWER S-P). If a flow-meter is being used, the measured flow rate is reduced to a defined percentage (which is set in LOW POWER S-P).

DOSE	>	LOW POWER SET-POINT
Description: In “Dose Reduction Mode” this variable is used to reduce the DOSE SET POINT, ALARM and FAULT levels when the system is running in low power mode. (e.g. Original DOSE SET POINT = 100, LOW POWER S-P = 20%, Ne-w DOSE SET POINT = 20) In “Flow Reduction Mode” this variable is used to scale the flow rate when the system is running in low power mode. The original value is multiplied by the LOW POWER S-P to attain the new value (e.g. Original FIXED FLOW RATE = 120, LOW POWER S-P = 40%, New FIXED FLOW RATE = 48). If LOW POWER S-P is set to 0%, the FLOW RATE value will reduce to 0.01 (units), causing the DOSE to rise dramatically.		
Selectable Values	0-99	%

Temperature



TEMPERATURE	>	TEMP UNITS	
Description: Displayed temperature units can be selected.			
Selectable Values		Degrees Celsius	°C
		Degrees Fahrenheit	°F

TEMPERATURE	>	CHAMBER TEMP ALARM	
Description: Temperature at which a non-critical alarm is generate if the UV Reactor Temperature exceeds this value			
Selectable Values		0 -120	°C
		32 – 248	°F

TEMPERATURE	>	CHAMBER TEMP FAULT	
Description: Temperature at which a critical alarm is generated if the UV Reactor Temperature exceeds this value This value is usually set to 46°C - If this value is set too high it could lead to damaged equipment or injury!			
Selectable Values		0 -120	°C
		32 - 248	°F

TEMPERATURE	>	TEMP ALARM D-B	
Description: Temperature reduction required below alarm temperature level before temperature output re-opens			
Selectable Values		0 -120	°C
		32 – 248	°F

TEMPERATURE	>	PANEL TEMP FAULT	
Description: Temperature at which a critical alarm is generated if the Control Panel Temperature exceeds this value This value is usually set to 46°C - If this value is set too high it could lead to damaged equipment or injury!			
Selectable Values		0 -120	°C
		32 – 248	°F



COMMS.	>	ANALOGUE OUTPUT 1	
Description: Used to select the required 4-20mA analogue output from AO1.			
Selectable Values		NONE	
		INTENSITY	0 - 100% of Average Intensity from UV Sensor
		DOSE	0 - 100% of ANALOGUE OUTPUT 1 MAX

Note: Parameter only available if only 1 x I/O Module installed

COMMS	>	DIGITAL INPUT 1,2 & 3	
Description: Used to select the digital input function on DI1, DI2 & DI3			
Selectable Values		NONE	
	*	REMOTE START/STOP	Used to start & Stop the system remotely
		BOOST	Used to force the lamps to 100% power when the Digital input is energised on the ATUV-1220.
		WATERL LEVEL HEALTHY	Used to set whether a conductivity probe is being used to ensure the chamber is full of water. If enabled the SPECTRA must see the signal before the system will start. If this signal is still lost after the WATER LEVEL DELAY time elapses (pre-set to 15 seconds), a Critical Fault will be generated, and the system will stop running.
		RESET ALARM	Used to Reset any faults that have been rectified
		LOW POWER	Used to reduce the power of the lamps. This will only happen once the system is in running mode and the control mode delay timer has expired
		PROCESS INTERLOCK	If activated the system will respond to the Process Interlock input, stopping the system from running. If selected, please refer to PROCESS INTERLOCK MODE & PROCESS INTEROCK ACTION for further set-up of this output.

Note: Parameter only available if only 1 x I/O Module installed. Digital inputs are fixed when 2 x I/O modules installed.
*DI1 is set to this input as Default

COMMS	>	MOD1 / 2 – DIGITAL OUT 1, 2 OR 3	
Description: Used to select the digital output function on DO1, DO2 & DO3			
Selectable Values		NONE	
		TEMP ALARM	Energises when the Temperature Alarm Level is reached
		REMOTE	Energises when the system is set to run in Remote mode
		DOSE HLTH	Energises when the measured dose is above the Alarm Level
		SYS RUN	Energises when the system is running
		SYSTEM READY	Energises when the following conditions exist: NO critical faults are present, and the re-strike timer is NOT running
		SYSTEM READY REMOTE	Energises when the following conditions exist: NO critical faults are present; the re-strike timer is NOT running and Remote IS selected.
		BREAK GLASS	De-Energises when potential water has been detected by the lamp
		LAMP FAILURE	Energises when a Lamp Fault has been generated
		LOW DOSE ALARM	Energises when the measured dose is above the Alarm Level
		NON-CRITICAL ALARM HEALTHY	Energises when no Non-Critical Alarms are present
		CRITICAL FAULT HEALTHY	Energises when no Critical Alarms are present
		OPEN VALVE	Energises when the system enters Running Mode (Refer to Start-up Sequence)

COMMS	>	WATER LEVEL LOW DELAY	
Description: Sets the time allowed before a conductivity fault is generated after losing the signal.			
Selectable Values	0-120		Seconds

COMMS	>	MODBUS SLAVE ADDRESS	
Description: Address used for external communications via Modbus (This value is usually set to “1”)			
Selectable Values	1-99		

COMMS	>	DHCP ENABLED	
Description: This is used to setup the internet connectivity: If enabled Dynamic Host Client Protocol is active and the network controller will assign the system an IP address. (This value is usually set to “ Enabled”)			
Selectable Values	*	Enabled	
		Disabled	

COMMS	>	IP SETTINGS	
Description: This is used to display the internet connectivity settings.			
Selectable Values	IP Address		xxx:xxx:xxx:xxx
	Subnet Mask		xxx:xxx:xxx:xxx
	Default Gateway		xxx:xxx:xxx:xxx

COMMS	>	DNS	
Description: This is used to setup the internet connectivity: If set to 0 then the Gateway DNS Server will be used, this is the normal setting.			
Selectable Values	xxx:xxx:xxx:xxx		

Process Interlock



COMMS	>	PROCESS INTERLOCK MODE	
Description: Set whether process interlock function is activated. If activated the system will respond to the process interlock input.			
Selectable Values	*	DISABLED	
		RUNNING	Process interlock feedback will only be required when the system has entered running mode
		FULL	System must see interlock feedback before starting

COMMS	>	PROCESS INTERLOCK ACTION	
Description: Defines the action to be taken if the process interlock signal is removed.			
Selectable Values		INTERRUPT	This will temporary stop the system until the signal is regained (Note: The re-strike timer must also have expired in order for the system to restart)
		SHUT-DOWN	This will stop the system until the signal is regained and is manually restarted using the SPECTRA control interface.

COMMS	>	PROCESS INTERLOCK DELAY
Description: Set the time the PROCESS INTERLOCK input (DI8) must be broken before the interlock action is generated		
Selectable Values	0 – 180	Seconds

Wiper



WIPER	>	WIPER TYPE	
Description: Used to select which wiper system is being used			
Selectable Values	None		No Wiper is being used
	Wiper I		AT-630 Wiper Module is being used
	Wiper II		ATUV-1040 Wiper Module is being used

WIPER	>	WIPER RUN INTERVAL*
Description: Used to define the length of time between each Wiper sweep		
Selectable Values	###.#	Hours

*Only visible if “Wiper Type” = “Wiper II”.

WIPER	>	WIPER LOW DOSE TIME*
Description: Used to extend the Low Dose Time parameter for when the wiper is running.		
Selectable Values	###	Seconds

*Only visible if “Wiper Type” = “Wiper II”.

WIPER	>	WIPE ON LOW DOSE*	
Description: Used to select whether a Wipe is initiated upon a Low Dose Alarm			
Selectable Values	*	Disabled	Wiper will <u>not</u> sweep upon Low Dose Alarm
		Enabled	Wiper <u>will</u> sweep upon Low Dose Alarm

*Only visible if “Wiper Type” = “Wiper II”.

UVT



UVT	>	UVT SOURCE	
Description: Used to select which UVT valve is used from which source.			
Selectable Values		Disabled	
		Comms	UVT valve via Comms
		Analogue	4-20mA meter input via AI1
		Static	Fixed valve

UVT	>	FIXED UVT	
Description: Used to select the fixed UVT valve.			
Selectable Values	0-100	%	

UVT	>	UVT METER MAX	
Description: Used to convert the UVT meter input (in mA) to the actual UVT. The UVT meter reading at 20mA should be entered.			
Selectable Values	0-100	%	

Miscellaneous



MISC.	>	RESET TO DEFAULTS?
Description: Resets the system to the factory defaults.		
Selectable Values	*	NO
		YES

MISC.	>	AUTO RESTART	
Description: Defines whether the system will attempt to restart after a power failure when the lamp/s were running. If a power failure does occur while the system was running, it will generate a POWER LOSS WHEN RUNNING alarm. (This value is usually set to DISABLED)			
Selectable Values	*	DISABLED	
		ENABLED	

MISC.	>	SET TIME & DATE
Description: Used to set the real time clock. If the Online Data logging feature is being used, the time will automatically sync to the server clock. Note: This can only be set when the restrike timer is not running		
TIME=24:00:00		Use the up and down arrows to select the required number, press enter to accept and move on to the next character. The clock is a 24 hour clock and can be altered depending on time zone.
DATE=30/12/2015		Use the Numeric variable screen to select the required number The date is of the format: DD/MM/YYYY

Integration

This section details how the Spectra control system can be integrated with other equipment on site to provide flexible and reliable operation. For all connections coming in or out of the panel from any equipment, feed-through terminals are provided and located next to the I/O cable entry.

Analogue Inputs

Spectra has one Selectable Analogue Input which operate on a 4-20mA input signal (AI1). This increases to 2 if an additional I/O module is installed:

Analogue Input	Description	Connection Details
UVT	This option is available if there is a Transmittance meter being used. The UV Transmissivity determines how well the UVC light will penetrate the water being treated. The higher the UVT, the more effective the UVC is for the deactivation of pathogens. By connecting a 4-20mA UVT input, the Spectra is able to display the UVT of the water being treated that is being passed through the chamber. **Note:** This reading is for information only and has no impact on the operation of the system	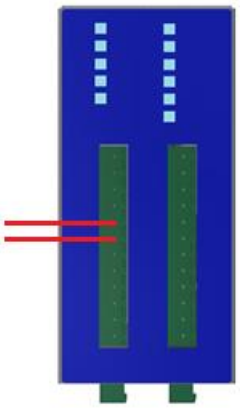
Flow Meter	Flow plays a vital role in determining the UV Dose. If the water being treated passing through the chamber varies in flow, the calculated UV Dose will also be affected. By connecting a 4-20mA flow meter, the Spectra is able to determine a more accurate UV dose reading. The **FLOW SOURCE** set to 'Analogue' and the **FLOW METER MAX** inputted on the Spectra.	

Analogue Outputs

Spectra has 1 Selectable Analogue Output which operate on a 4-20mA input signal (AI1). This increases to 2 if an additional I/O module is installed:

Analogue Output	Description	Connection Details
Dose	Spectra has one selectable active analogue outputs (**DOSE & INTENSITY**) which operate on a 4-20mA output signal. One of these signals can be outputted from both AO1 on the on the ATUV-1220 and requires scaling by setting a maximum value at 20mA which is done using the **ANALOGUE OUTOUT 1 MAX** variable. If these outputs are selected, they will replicate the Spectra figures in a 4-20mA signal.	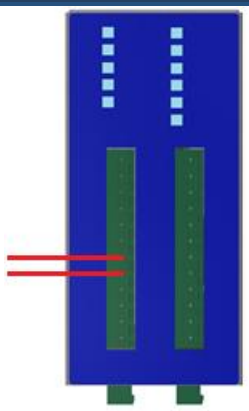
Intensity		

Digital Inputs

Spectra has 3 Selectable Digital Inputs DI1, DI2 & DI3. This increases to 6 if an additional I/O module is installed:

Digital Input	Description	Connection Details
Remote Start/Stop	DI1 on the ATUV-1220 enables the remote Start / Stop action which allows remote volt-free contacts to mimic the action of the normal front panel **START** and **STOP** pushbuttons. If the system is set to remote and the volt free contact is closed the UV system will be permitted to run and continue to run if the signal is still present. If the external signal is removed the UV lamp will be stopped (if running). The system cannot be started using the Touch whilst in remote but can be stopped. By stopping the system locally whilst in remote will cause a critical fault (Local Stop Fault) which will need to be locally reset.	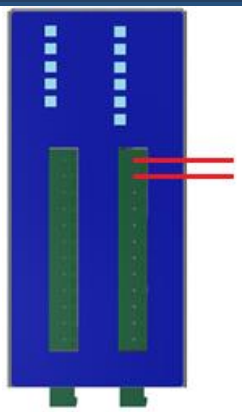
External Low Power Switching	The Low Power Switching primary function is to force the system into low power (50% lamp power output), consequently affecting the dose. **Dose Reduction** To avoid the system tripping on Low UV Dose, the **LOW POWER S-P** variable is used to scale the Dose Alarm and Fault levels accordingly if **DOSE REDUCTION MODE** has been selected. **Flow Reduction** The function of the **FLOW REDUCTION MODE** is to reduce the flow rate accordingly, again using the **LOW POWER S-P** variable. This is particularly useful if a Flow meter is not being used and there is a fixed reduction in flow (e.g. pump turning off). The system will scale down the **FLOW RATE** so that it is equivalent to the new reduced flow rate. If the **LOW POWER S-P** has been set to 0% whilst in **FLOW REDUCTION MODE**, the flow rate will reduce to 0.01 to purposely increase the Dose to reduce the chances of Low Dose Alarms/Faults from occurring. These functions are also useful if filters are used and a backwash/bump cycle is being carried out in a process, or there is reduced/no flow and the system is to remain running. By forcing the system to the lowest power, the chances of the system tripping on High Temperature will reduce.	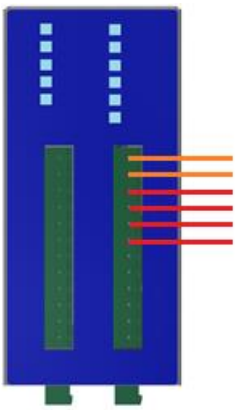 *DI1 set to Remote Start/Stop as default on I/O Module #1; Selectable on I/O Module #2 (if fitted).
Boost	The Boost function is used to force the system to full power (100% lamp power output) and can be used in conjunction with chlorine controllers. If combined Chloramines are high (if present), and the chlorine controller alarm is triggered, this will activate the Boost function. By increasing the lamp output, an increase in intensity will result that will help to break down the bonds. **Note:** If both Boost and External Low Power Switch are energised, Low Power will always take priority.	

Digital Input	Description	Connection Details
Process Interlock	The Process Interlock opto-isolated input enables an external device (switch, pump, etc.), to stop the running of the UV lamp/s. If the volt free contact is closed the UV system will be permitted to run. **Process Interlock Action** The Process Interlock Action describes HOW the system wants to respond when the signal has been lost: • If **PROCESS INTERLOCK - INTERUPT** has been set and the external signal is lost, the UV lamp will be stopped (if running) causing a Non-Critical Alarm to appear on the spectra (Process Interlock Interrupt) and not allowed to start again until the PI signal is regained and the restrike time has elapsed Note: if Remote is enabled, the remote signal will also have to be present for the system to re-start • If **PROCESS INTERLOCK - SHUTDOWN** has been set and the external signal is lost, the UV lamp will be stopped (if running) causing a Critical Fault (Process Interlock Shutdown) to appear on the Spectra and not allowed to start again until the Critical Fault has been reset locally. **Process Interlock Mode** The Process Interlock Mode describes WHEN the system responds to the signal loss: • If the Process Interlock Mode is set to **NONE**, this function is disabled • If the Process Interlock is set to **FULL**, the system will stop the UV lamp/s from running if the system is in start-up or running mode • If the Process Interlock is set to **RUNNING**, the system will only stop the UV lamp/s from running if the system is in running and ignores if the signal has been lost if the system is in start-up.	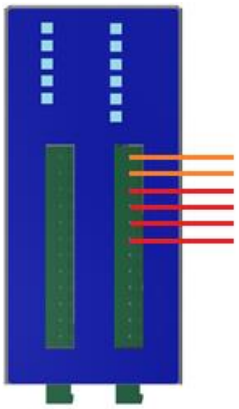 *DI1 set to Remote Start/Stop as default on I/O Module #1; Selectable on I/O Module #2 (if fitted).

Digital Outputs

Spectra has 2 Selectable Digital Outputs. This increases to 5 if an additional I/O module is installed:

Digital Output	Description	Connection Details
Open Valve	Spectra can signal the opening & closing of valves if being used in conjunction with the UV system. When the system enters **RUNNING** mode, this output will energise causing the valve to open (operated by motor, air actuated, etc.), in turn causing the valve to close when the signal has been lost.	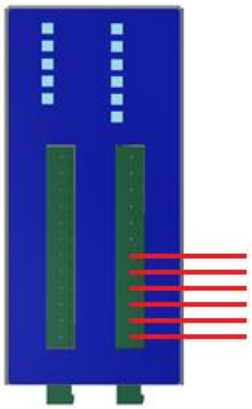
Bleed Valve	A bleed on relay can be used in conjunction with one of the Spectra Selectable Digital Outputs. If the **SELECTABLE DIGITAL OUTPUT** is set to **TEMPERATURE ALARM**, and the chamber temperature exceeds its Alarm Set-point value, it will cause the Digital Output to energise. If connected, this will be able to signal a bleed valve to open, either allowing air trapped in the chamber to escape or to allow flow to pass through the chamber, consequently reducing the temperature without reaching the shutdown temperature (**FAULT TEMP**). This Digital Output will de-energise when the chamber temperature falls below a value of 5˚C/F, thus closing the bleed valve.	
Critical / Non-Critical Healthy	Both of these Digital Output signals indicate if a Critical Fault or Non-Critical Alarm has been experienced. The Digital Output energises when the Fault / Alarm has occurred.	
Running	This Digital Output signal provides an indication that the system is running. This output energises as soon as the lamp/s strike or are running.	
Dose Healthy	This Digital Output signal provides an indication that the Dose is Healthy and will energise when the Dose is above the **DOSE ALARM LEVEL** for **GOOD DOSE TIME**.	

MODBUS Communication

Introduction

The Spectra UV disinfection system has built in Modbus RTU for control and monitoring of the systems performance parameters.

This document is aimed at end users and system integrators of the Spectra UV disinfection system and covers the following:

- Modbus implementation
- Modbus maintenance
- Modbus debugging

Supported Interface

Spectra works as a slave device and is implemented in accordance with the EIA/TIA-485 (RS-485) standard, supporting the following:

- 2 or 4 wire interface
- Odd, even and no parity
- Baud rates 9600 to 115200
- One or two stop bits

Physical Connection

Cable Connection

Connection to the Spectra is via the Modbus Slave port on the ATUV-1010 motherboard.



An RJ45 connection is required with the following pin out:

Modbus Slave Pin out		
1	Rx+	Receive positive
2	Rx-	Receive negative
3		
4	Tx-	Transmit negative
5	Tx+	Transmit positive
6		
7		
8	Ground	Reference ground

2 / 4 wire selection

Both 2 and 4 wire interfaces are supported, this is selected using a 4 way header on the ATUV-1010. No jumpers indicate 4 wire interface, for 2 wire interface 2 jumpers should be fitted.

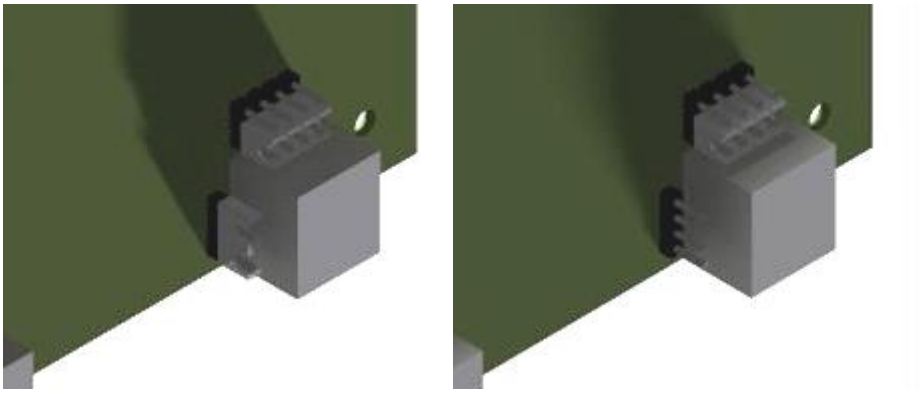

ATUV-1010 with (left) and without jumpers (right)

Data Transmission

The following parameters are set from the config.xml on the SD card and are found in the ModbusSlave directory.

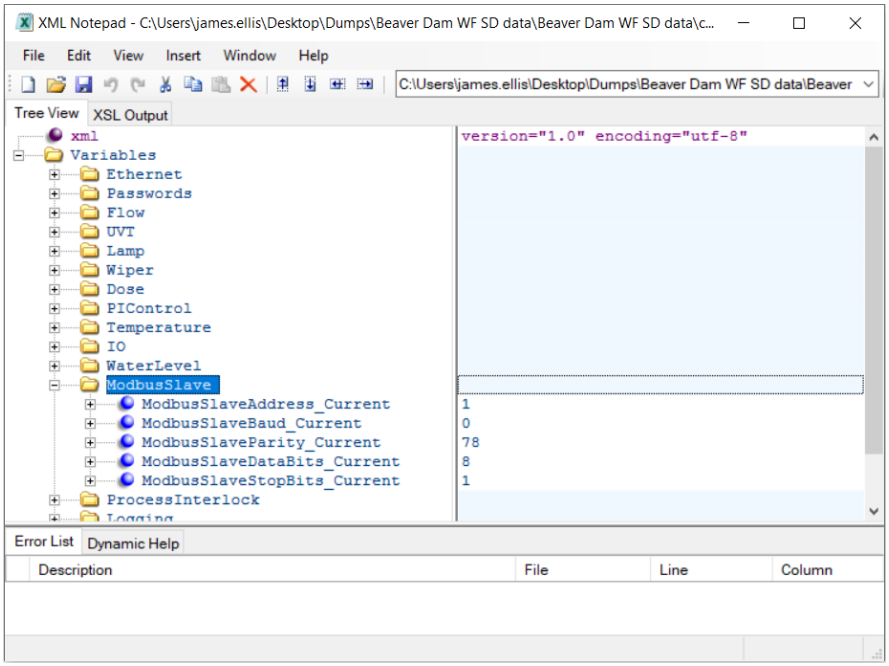

Slave Address

ModbusSlaveAddress_Current	
Description: Used to set this slave address of the Spectra unit.	
Selectable Values	1 - 99

Data Bits

ModbusSlaveDataBits_Current	
Description: Used to select the number of data bits in the Modbus frame.	
Selectable Values	7
	8

Stop Bits

ModbusSlaveStopBits_Current		
Description: Used to select the number of stop bits in the Modbus frame.		
Selectable Values	1	
	2	

Parity

ModbusSlaveParity_Current		
Description: Used to select the parity checking of the Modbus frame.		
Selectable Values	N (78)	None
	E (69)	Even
	O (79)	Odd

Baud Rate

ModbusSlaveBaud_Current		
Description: Used to select the transmission baud rate.		
Selectable Values	0	115200
	1	57600
	2	38400
	3	19200
	4	9600

Message Structure

General Structure

Modbus frames are structured in the following format:

Address	Function Code	Data	CRC
8 bits	8 bits	N x 8 Bits	16 bits

Address		
Description: Single byte used to identify the slave address		

Function Code	
Description: Consists of a single byte and is used to tell the address slave what action to perform, the following function codes are supported:	
0x03	Read Holding Registers
0x04	Read Input Register
0x06	Write Single Register
0x10	Write Multiple Registers

Data		
Description: Multiple bytes containing the actual data		

CRC		
Description: Consists of 2 bytes which are a result of a cyclic redundancy check calculation performed on the message content.		

Read Data

Function code 0x03 and 0x04 requests from the mater should be structured in the following format:

Address	Function Code	Data		CRC
		Register Start Address	Number of Registers	
8 bits	0x03 or 0x04	16 Bits	16 Bits	16 bits

The Spectra will reply to a successful read request in the following format:

Address	Function Code	Byte Count	Data	CRC
8 bits	0x03 or 0x04	8 bits	N x 8 bits	16 bits

Write Data

Write Single Register

Function code 0x06 frames from the master should be structured in the following format:

Address	Function Code	Data		CRC
		Register Address	Data	
8 bits	0x06	16 bits	16 bits	16 bits

The Spectra will reply to a successful write by sending an echo of the request.

Write Multiple Registers

Function code 0x10 frames from the master should be structured in the following format:

Address	Function Code	Data				CRC
		Register Start Address	Number of registers	Byte Count	Data	
8 bits	0x10	16 bits	16 bits	8 bits	N x 8 bits	16 bits

The Spectra will reply to a successful write by sending an echo of the request.

Data Storage

The data stored in the Spectra is arranged as a database, which is accessed for read or write using 16-bit words arranged to give access to control, status and configuration data.

Each parameter has an associated Read / Write attribute associated with it. A byte written to a read only address will be ignored with no exception generated. Similarly a byte read from a write only address will return 0 with no exception generated.

Writing to an undefined address within the allowable data range is ignored; similarly reading an undefined address will return 0. Again no exception will be generated.

Attempting to write or read data from an area outside the allowable data range will result in the transmission of an exception message.

Changes to data written from the master are actions immediately upon receipt.

Full Register Map

Address	Description	Units (Default)	Type	Read / Write
46000	Flow	m^3/hr (x10)	uint_16	Read
46001	Chamber Temperature	°C (x10)	uint_16	Read
46002	UV Dose	mJ/cm^2 (x10)	uint_16	Read
46003	Average UV Intensity	mW/cm^2 (x10)	uint_16	Read
46004	Average Lamp Power	Watts	uint_16	Read
46005	System UVT	% (x10)	uint_16	Read
46006	System Power Level	% (x10)	uint_16	Read
46007	Rolling Watchdog		uint_16	Read
46008	System Status	(See example)	uint_16	Read
46009	Fatal Alarm Status	(See example)	uint_16	Read
46010	Critical Status	(See example)	uint_16	Read
46011	Non-Critical Alarm Status	(See example)	uint_16	Read
46012	System Hours	Hours (/24)	uint_16	Read
46013	Dose Set point	mJ/cm^2 (x10)	uint_16	Read
46020	System Control	(See example)	unit_16	Read / Write
46021	Comms Flow Rate	m^3/hr	unit_16	Read / Write
46022	Comms UVT	% (x10)	unit_16	Read / Write
46023	Power Control mode	(See example)	unit_16	Read / Write
46024	Reset Alarms	0 – No reset 1 – Reset Alarms	unit_16	Write
46025	Force Wiper Run	0 – No Run 1 – Force Run	unit_16	Write

Address	Description	Units (Default)	Type	Read / Write
46030	Lamps in use (1-16)	(See example)	unit_16	Read
46031	Lamps in use (17-32)	(See example)	unit_16	Read
46034	Sensor in use (1-16)	(See example)	unit_16	Read
46035	System Control Mode	0 – Local 1 – Remote 2 – COMMS	unit_16	Read
46036	Flow meter Source	0 – Static Flow 1 – Comms 2 – Flow Meter	unit_16	Read
46037	Dose Units	0 – mJ/cm^2 1 – J/m^2 2 – J/cm^2	unit_16	Read
46038	Flow Units	0 – m^3/hr 1 – BPM 2 – l/s 3 – Ml/d 4 – GPM 5 – MGD	unit_16	Read
46039	Intensity Units	0 – mW/cm^2 1 – W/m^2	unit_16	Read
46040	Temperature Units	0 - °C 1 - °F	unit_16	Read
46041	Lamp Life Setpoint	Hours	unit_16	Read
46042	Restrike Time	Seconds	unit_16	Read
46043	Low Dose Time	Seconds	unit_16	Read
46044	Fixed Flow Rate	m^3/hr	unit_16	Read
46045	Flow meter Max	m^3/hr	unit_16	Read
46048	Dose Alarm Level	mJ/cm2	unit_16	Read
46049	Dose Fault Level	mJ/cm2	unit_16	Read
46050	Fault Temperature	°C	unit_16	Read
46051	Alarm Temperature	°C	unit_16	Read
46052	Power Level	%	unit_16	Read
46053	Auto Restart		unit_16	Read
46055	Water Level Low Delay	Seconds	unit_16	Read
46056	Restrike Countdown Timer	Seconds (counts down upon lamp(s) extinguishing)	unit_16	Read

Address	Description	Units (Default)	Type	Read / Write
47100 – 47109	UV Intensity 1 to UV Intensity 10	mW/cm^2 (x100)	uint_16	Read
47200 – 47231	Lamp Hours 1 to Lamp Hours 32	Hours	uint_16	Read
47300 – 47331	Lamp Strikes 1 to Lamp Strikes 32		uint_16	Read
47400 – 47431	ELC Nominal Power	W	uint_16	Read
47450 – 47481 (Internal Use Only)	ELC Error	(See Example)	uint_16	Read
47500 – 4731 (Internal Use Only)	ELC Lamp Status & Warning	(See Example)	uint_16	Read
47550 -47581	ELC Lamp Power (Actual)	W	uint_16	Read
47600 - 47631	ELC Lamp Voltage	V	uint_16	Read
47650 - 47681	ELC Lamp Current	A (x10)	uint_16	Read
48000 - 48031	Ballast/Lamp Status	(See Example)	uint_16	Read

Resister Examples

System Control	
Description: Start, Stops & Resets faults present on the system. Note: Spectra requires to be set to Remote to start/stop the system via Comms.	
Address	46020
Type	uint_16
Read / Write	Read / Write
Example	0 - Stop 1 - Start

Power Control mode	
Description: Selects the power level of the system.	
Address	46023
Type	uint_16
Read / Write	Read / Write
Example	0 – Low 1 - Variable 2 – Full

Lamps in use	
Description: Indicates the number and order of lamps enabled.	
Address	46030 / 46031
Units	Y / N
Type	uint_16
Read / Write	Read only
Example	Value of 5 would indicate that lamps 1 and 3 are enabled. (YNYN NNNN NNNN NNNN / 1010 0000 0000 0000)

UV Sensors in use	
Description: Indicates the number and order of UV sensors enabled.	
Address	46034
Units	Y / N
Type	uint_16
Read / Write	Read only
Example	Value of 3 would indicate that sensors 1 and 2 are enabled. (YYNN NNNN NNNN NNNN / 1100 0000 0000 0000)

Fatal Alarms	
Description: Displays the status of the fatal alarms	
Address	46009
Type	uint_16
Read / Write	Read only
Example	0 – No fatal alarms 1 – IO Module Watchdog Error 2 – Ballasts Communications Watchdog Error 4 – Local Stop Fault 8 – System Power Loss Fault

Critical Alarms	
Description: Displays the status of the critical alarms	
Address	46010
Type	uint_16
Read / Write	Read only
Example	0 – No critical alarms 1 - I/O modules less than expected 2 - Electronic Ballasts Less than expected 4 – I/O Module not calibrated 8 - SD Card not found 16 - Ballast/Lamp fault 32 - Chamber temperature fault 64 – Control Panel over temperature 128 – Low UV dose fault 256 – Water Level Low 512 – Process Interlock shutdown 1024 – Flow Meter Out of Range

Non-Critical Alarms	
Description: Displays the status of the non-critical alarms	
Address	46011
Type	uint_16
Read / Write	Read only
Example	0 – No non-critical alarms 1 – Process interlock interrupt 2 – Low UV dose alarm 4 – Wiper alarm 8 – Lamp Approaching end of life 16 – Chamber temperature alarm 32 – Power Loss When Running

System Status	
Description: Displays the overall status of the system.	
Address	46008
Type	uint_16
Read / Write	Read only
Example	0 – Normal Stop 1 – Running 2 – Starting Up 4 – Fatal Fault 8 – Critical Fault 16 – Non-Critical Alarm 32 – Stopped Restrike, Stopped Non-Critical, Stopped Critical, Stopped Fatal, Stopped Process Interlock

ELC Error (Internal Use Only)	
Description: Displays the error status of each Ballast/lamp	
Address	47450 to 47481 (Lamp 1 to 32)
Type	uint_16
Read / Write	Read only
Example	0 – No Errors 1 – DC Link Undervoltage 2 – Mains Voltage Low 4 – Fan Error 8 – ELC High Temperature 16 – Internal Error 32 – Bus Connection Error 64 – Over-voltage 128 – Lamp Voltage High 256 – Overcurrent 512 – Measurement 1024 – Earth Leakage Fault 2048 – ZVS 4096 – Supply Voltage Low 8192 – Slave Error 16384 – Can Intern

ELC Lamp Status & Warning (Internal Use Only)	
Description: Displays the status & Warning of each Ballast/lamp	
Address	47500 to 4731 (Lamp 1 to 32)
Type	uint_16
Read / Write	Read only
Example	0 – No Errors 1 – Lamp Voltage Low 2 – Run-up Long 16 – Safety relay open 32 – Lamp Ignition Failed 128 – Init. Signal OK 256 – Lamp On 512 – Lamp Run-up 1024 – Lamp Ignition

Ballast/Lamp Status	
Description: Displays the status of each Ballast/lamp	
Address	48000 to 48031 (Lamp 1 to 32)
Type	uint_16
Read / Write	Read only
Example	1 – Lamp Off 2 – Lamp Igniting 4 – Lamp Warming 8 – Lamp Running 16 - Lamp Ignition Failed 32 - Lamp Low Power 64 - Lamp Overvoltage 128 - Lamp Overcurrent 256 - Lamp Earth Leakage 512 – Lamp End of Life 1024 - Ballast Safety Circuit Open 2048 - Ballast Internal 4096 - Ballast Low Supply Voltage 8192 - Ballast Fan 16384 - Ballast Temperature 32768 - Ballast Communications

Trouble Shooting

Should a fault occur, please see below for troubleshooting guide.

NOTE: Should more than one fault occur, the fault will be displayed in date & time order. Once the cause of the alarm or fault has been rectified, pressing the reset button on the alarm screen will reset the alarm.

System does not operate

Message	
No Message	
Possible Cause	**Possible Solutions**
Main Power Source is OFF	Ensure there is power to the system
Isolator is in the OFF Position	Ensure both the Isolator and all MCB's are turned ON.
Incorrect Supply Voltage	Ensure the correct voltage is being supplied to the system
Faulty 24VDC Power supply	Ensure the 24VDC power supply LED is energized (healthy), and 24VDC +/- 1V is being measured from the output
Isolator Fuse has blown (If fitted)	Check Isolator fuse before replacing.
Control Transformer is Faulty (if fitted)	Check that 230V AC appears between terminals L & N on the 24VDC power supply

No CRC Was Found

Message	
No Kernel CRC Found	
Reasons	**Possible Solutions**
SD card not inserted upon power on	Ensure the SD card is inserted correctly
The Spectra2.afx.S19 file is missing from the SD card	Ensure the Spectra2.afx. file is located in the root of the SD card

Ballast/Lamp Fault

Lamp Ignition Failed

Message	
Lamp Ignition Failed	
Reason	**Possible Solutions**
ELC is unable to ignite the lamp	Ensure all Lamp Output connections from the ELC Ballast to the Lamp are secure and there are no physical damages.
	Check for physical damage to the Lamp (i.e. cracks in the Lamp, nipple still in-tact). To confirm whether it is a faulty lamp, replace with another (working) lamp. If there are no spare lamps and it is a multi-lamp system, swap the suspected faulty lamp with a known working lamp out the same system.

Lamp Low Power

Message	
Lamp Power Low	
Reason	**Possible Solutions**
The lamp has extinguished on its own during operation.	Ensure all Lamp Output connections from the ELC Ballast to the Lamp are secure and there are no physical damages.
	Check for physical damage to the Lamp (i.e. cracks in the Lamp, nipple still in-tact). To confirm whether it is a faulty lamp, replace with another (working) lamp. If there are no spare lamps and it is a multi-lamp system, swap the suspected faulty lamp with a known working lamp out the same system.

Lamp Overvoltage

Message	
Lamp Overvoltage	
Reason	**Possible Solutions**
The Lamp voltage exceeds a threshold critical for the ELC	Ensure all Lamp Output connections from the ELC Ballast to the Lamp are secure and there are no physical damages.
	Ensure the correct lamp is being used for the system
	Ensure the correct ‘Maximum Power’ setting has been set on the Spectra.
	Replace with new Lamp

Lamp Earth Leakage

Message		
Lamp Earth Leakage		
Reason	**Possible Causes**	**Possible Solutions**
Current has been detected through Earth	Moisture has entered inside the quartz	Check the seals are not allowing liquid inside the quartz. Also check that the quartz hasn't broke or cracked.
	Faulty Lamp	Ensure all Lamp Output connections from the ELC Ballast to the Lamp are secure and there are no physical damages.
		Check for visible damage to UV lamp (e.g. cracks in lamp)

Ballast Safety Circuit Open

Message	
Ballast Safety Circuit Open	
Reason	**Possible Solutions**
The Safety Circuit on the ballast/s has opened.	Ensure the safety circuit input to the ballast is healthy/connections not come loose.

Ballast Internal

Message	
Ballast Internal	
Reason	**Possible Solutions**
Ballast has experienced an internal fault	Replace Ballast (contact Evoqua Water Technologies for more info).

Ballast Low Supply Voltage

Message	
Ballast Low Supply Voltage	
Reason	**Possible Solutions**
Low or fluctuating supply voltage to ballast	Check the voltage supply is within local regulations
	Ensure the ELC ballast in powered (OLED screen on)

Ballast Fan

Message		
Ballast Fan		
Reason	**Possible Causes**	**Possible Solutions**
Lamp driver fan fault or incorrect RPM	Lamp Driver Fan stopped rotating	Ensure Lamp Driver fan rotates when lamp is running
	Lamp Driver Fan rotating at lower RPM	Ensure there are no obstacles restricting Lamp Driver Fan rotating
		Replace Lamp Driver

Ballast Temperature

Message		
Ballast Temperature		
Reason	**Possible Causes**	**Possible Solutions**
Lamp diver air temperature too high	No air circulation inside panel	Check the Panel Inlet Fan Filter is not blocked
	Faulty Fan	Check the Panel Inlet Fan rotates when the lamps are running. Check for any loose or damaged connections
	High ambient temperature	Ensure the ambient temperature is not higher than allowed operating temperature

Low Dose

Message		
Low Dose Alarm Or Low Dose Fault		
Reason	Possible Causes	Possible Solutions
Dose Drops below Alarm Level/Fault Set-points	Fouling/deposits blocking UV light to the Sensor	Check the Quartz window for deposits on the inside or outside. Any coating can reduce the amount of UV light passing through to the UV Sensor. The amount of UV Light that will pass through the Quartz decreases as it ages and should be changed approximately every 18 months.
		Check for fingerprints on both the Quartz & UV Lamp. If the Quartz & UV Lamp are handled without gloves, the grease/fatty deposits from the skin can etch themselves onto the surfaces once the lamp is struck.
	UV Transmittance (UVT) of the water has decreased	Ensure water quality is within specification for the UV system installed
	Aging of the Lamp	Check the UV Lamp run time and replace lamp if necessary. UV Intensity decreases as the lamp ages.
	An increase in flow (if flow meter is fitted)	Check the Flow Rate flowing through the system. If a flow meter is enabled, an increase in flow will decrease the Dose. Also check the FLOW METER MAX variable is not set higher than the maximum flow the chamber will experience.
	Dose Alarm/Fault levels are set too high	Check that DOSE ALARM LEVEL and DOSE FAULT LEVEL are set to the correct values.
	UV Probe is not properly connected	Check there is a sensible value displayed on the screen. With the system stopped 4mA should be displayed. The UV1/2 LED on the ATUV-1220 should also be illuminated (indicating a healthy signal)
	As the wiper (if fitted) sweeps across the quartz, the UV intensity may dip long enough for it too cause an alarm.	Check the LOW DOSE TIME value is correct. Force the wiper to carry out a sweep of the quartz to see if it affects the Dose long enough to generate a fault/alarm.
	Air trapped between the sensor and lamp/s	Ensure any air trapped in the chamber is remove as air trapped within the system will not allow UV Light to pass through correctly.
	Possibility of a Faulty probe	Check for visible damage to the probe & probe cable

Control Panel Over-Temperature

Message		
Control Panel Over Temperature		
Reason	Possible Cause	Possible Solutions
The temperature inside panel has exceeded the thermostat cut-out temperature	No air circulation inside panel	Ensure fan filter is not blocked
	Faulty Fan	Check Fan rotates when DO1 on the ATUV-1220 is energised. Check for any loose or damaged connections
	High ambient temperature	Ensure the ambient temperature is not higher than allowed operating temperature

Chamber Over-Temperature

Message		
Chamber Over-Temperature Alarm Or Chamber Over-Temperature Fault		
Reason	**Possible Causes**	**Possible Solutions**
Chamber temperature reading has exceeded temperature Alarm set-point **Or** **Chamber temperature reading has exceeded temperature Fault set-point**	Very slow or static flow through chamber	Check Fluid is flowing through the system at a reasonable flow.
		Check Manual/Auto Valves are Open
	Temperature Fault/Alarm levels set too low for application	Check the initial temperature of fluid flowing through the system
		Check the Fault/Alarm Set-Points are set to the correct/reasonable value
	Faulty Connection	Check for visible damage to the temperature probe & probe cable. Check the resistance across the red/blue and green wires to the temperature sensor (see below for resistance values).
		Check there is a sensible value displayed on the screen and the TEMP LED on the ATUV-1220 is illuminated (indicating a closed signal)

Power Loss While Running

Message	
Power Loss While Running	
Reason	Possible Solutions
The system was running upon power failure or was turned off.	Check for power failure to the UV System
	Check the power supply for any dips/surges in voltage

Lamp Approaching End of Life

Message	
Lamp Approaching End of Life	
Reason	**Possible Solutions**
The lamp life timer has exceeded the recommended run hours	The system has a timer that counts how long the lamp has been running. Once this time is exceeded the UV Lamp should be changed & the Lamp Run hours reset.

Resetting Lamp hours

To Reset the Lamp hours after a Lamp change:
Enter the Operator Menus (Refer to the Set-up Screen Menus – Operator Menus) and scroll down to the LAMP MENU screen and press enter.

- To **Reset hours on all Lamps**, select **RESET ALL LAMPS** by pressing enter on the menu and confirm with Yes.
- To **Reset Individual Lamp hours**, select **RESET INDIVIDUAL LAMP HOURS** and **RESET LAMP # HOURS** will appear. Scroll up/down to select the desired Lamp and press enter to select Yes to reset the hours for that particular lamp.

Local Stop Fault

Message	
Local Stop Fault	
Reason	**Possible Solutions**
System has been stopped from the Spectra while in remote	If the system is running in remote, pressing the Stop button on the Spectra will still stop the system creating a Fatal Fault. This cannot be reset over the Modbus communications network. Pressing the Reset button on the Spectra will restart the system if the remote run signal is still present & the re-strike timer has elapsed.

Process Interlock

Message	
Process Interlock Interrupt Or Process Interlock Shut-down	
Reason	Possible Solutions
Process Interlock signal (DI1/DI2/DI3 on ATUV-1220) has been lost while running/start-up	Check signal from the Process Interlock device. e.g. Pump is running – Flow Switch has operated etc.
	Check DI8 on the ATUV-1220 is energising when the signal from the Process Interlock is active
	Check Process Interlock Delay time is set to an appropriate time.
	Check for visible damage to signal cables

Wiper Fault

Message	
Wiper Fault	
Reason	**Possible Solutions**
Automatic mechanical wiper has failed to perform sweep	Refer to Automatic Wiper Section of the Manual for Fault Diagnostics.

I/O Communications Watchdog

Message	
I/O Module Watchdog Error	
Reason	**Possible Solutions**
Communication to the ATUV-1220 has been lost	Check ethernet connections from the spectra to the ATUV-1220 and the AO1 is illuminated
	Ensure there is power to the module.

Electronic Ballast Communications Watchdog

Message	
Electronic Ballast Watchdog Error	
Reason	**Possible Solutions**
Communication to the Electronic Ballast has been lost	Check ethernet connections from the spectra components to Electronic Ballast
	Ensure there is power to the Electronic Ballast

Water Level Low

Message		
Water Level Low		
Reason	**Possible Causes**	**Possible Solutions**
Water Level signal (DI1/DI2/DI3 on the ATUV-1220) has been lost	Water level has dropped below required level	Ensure water level is above conductivity probe
	Faulty connection	Check all cable connections and ensure DI1/DI2/DI3 is illuminated indicating water level is above conductivity probe

I/O Modules Less Than Expected

Message	
I/O Modules Less Than Expected	
Reason	**Possible Solutions**
The Number of I/O's enabled on the spectra has exceeded the actual amount of lamps modules being used	Check the ATUV-1220 address' correspond to the Number of I/O's enabled on the Spectra (Please refer to the Spectra Operations & Maintenance manual for details)
	Check Ethernet connections between Spectra & ATUV-1220

Electronic Ballasts Less Than Expected

Message	
Electronic Ballasts Less Than Expected	
Reason	**Possible Solutions**
The Number of Electronic Ballasts enabled on the spectra has exceeded the actual amount of ballasts being used	Check the Electronic Ballasts address' correspond to the Number of Ballasts enabled on the Spectra (Please refer to the Spectra Operations & Maintenance manual for details)
	Check Ethernet connections between Spectra & Electronic Ballast

Flow Meter Out of Range

Message		
Flow Meter Out of Range		
Reason	**Possible Causes**	**Possible Solutions**
The flow meter input (AI1 on the ATUV-1220) is outside the 4mA and 20mA tolerances	Faulty signal	Ensure the signal from the device to the Spectra is within 4 & 20 mA.
	Faulty connection	Check all cable connections and ensure AI1 LED is illuminated indicating a signal above 3.5 mA.



For further support, please contact your local authorised service provider. Alternatively, contact our UK head office:

FOR GENUINE SPARE PARTS:

E: spares.atg@evoqua.com | T: +44 (0)1942 216161 – Opt 1

TO ARRANGE A SERVICE OR COMMISSION:

E: service.atg@evoqua.com | T: +44 (0)1942 216161 – Opt 1

FOR ANY OTHER ENQUIRIES:

E: info.atg@evoqua.com | T: +44 (0)1942 216161

EVOQUA WATER TECHNOLOGIES LTD

Genesis House
Richmond Hill
Wigan
WN5 8AA
United Kingdom

www.evoqua.com | www.atguv.com

EVOQUA
WATER TECHNOLOGIES