xylem
Let's Solve Water

TECHNICAL BROCHURE
B2DES R5



FEATURES

Impeller: Cast iron, semi-open, non-clog with pump-out vanes for mechanical seal protection. Balanced for smooth operation. Silicon bronze impeller available as an option.

Casing: Cast iron volute type for maximum efficiency. 2" NPT discharge.

Dual Mechanical Seals

- Lower: SILICON CARBIDE VS. SILICON CARBIDE sealing faces. Stainless steel metal parts, BUNA-N elastomers.
- Upper: CARBON VS. CERAMIC sealing faces. Stainless steel metal parts, BUNA-N elastomers.

Seal Sensor Probe: Located in oil-filled chamber. If pumpage should begin to leak past lower seal it indicates to pump control panel a fault has occurred. **Requires optional Seal Fail Circuit in the control panel.**

Shaft: Corrosion resistant, stainless steel. Threaded design. Locknut on all models to guard against component damage on accidental reverse rotation.

Fasteners: 300 series stainless steel.

Capable of running dry without damage to components.

Designed for continuous operation when fully submerged.

2DES

SUBMERSIBLE EFFLUENT PUMP – DUAL SEAL WITH SEAL SENSOR PROBE

Bell & Gossett
a xylem brand

APPLICATIONS

Specifically designed for the following uses:

- Farms
- Trailer courts
- Effluent systems
- Motels
- Schools
- Hospitals
- Industry

SPECIFICATIONS

Pump

- Solids handling capabilities: ¾" maximum.
- Discharge size: 2" NPT.
- Capacities: up to 130 GPM.
- Total heads: up to 128 feet TDH.
- Temperature: 104° F (40° C) continuous, 140° F (60° C) intermittent.

Motor:

- Fully submerged in high-grade turbine oil for lubrication and efficient heat transfer.
- Class F insulation

Single phase:

- Built-in overload with automatic reset.
- All single phase models feature capacitor start motors for maximum starting torque.
- ⅓ and ½ HP – 16/3 SJTOW with 115 V or 230 V three prong plug.
- ¾-1½ HP – 14/3 STOW with bare leads.

Three phase:

- Overload protection must be provided in starter unit.
- ½-1½ HP – 14/4 STOW with bare leads.
- Designed for Continuous Operation: Pump ratings are within the motor manufacturer's recommended working limits, can be operated continuously without damage when fully submerged.
- Bearings: Upper and lower heavy duty ball bearing construction.
- Power and Control Cable: Severe duty rated, oil and water resistant. Epoxy seal on motor end provides secondary moisture barrier in case of outer jacket damage and to prevent oil wicking. 20 foot standard with optional lengths available.
- O-ring: Assures positive sealing against contaminants and oil leakage.

AGENCY LISTINGS

C US

Tested to UL 778 and CSA 22.2 108 Standards
By Canadian Standards Association
File #LR18526

NOMENCLATURE DESCRIPTION

1st - 4th Character
2 = 2″ N.P.T. Threaded
D = Dual Seal with Seal Fail (moisture) Sensors
E = Effluent
S = Semi-open Impeller

5th Character – Phase
1 = Single Phase
3 = Three Phase
4 = Three Phase with Pilot Duty, Thermal Sensors

6th Character – Horsepower
A = .33 C = .5 D = .75 E = 1.0 F = 1.5

7th Character – Voltage
1 = 115 3 = 230 5 = 575
2 = 200/3Ø or 208/1Ø 4 = 460

8th Character – Discharge Style
T = Threaded (2″ N.P.T.)

9th Character – Motor RPM / Hertz
1 = 3500/60 5 = 2900/50
2 = 1750/60 6 = 1450/50
3 = 1150/60 7 = 950/50

10th Character – Impeller Code
A = 4.56″ 1.5 HP
B = 4.44″ 1.0 HP
C = 4.06″ .75 HP
D = 3.56″ .5 HP
E = 5.38″ .33 HP
F = 5.38″ (L) .33 HP (L)
(with high flow casing)
G = 5.50″ (H) 1.5 HP (H)
H = 3.88″ (H) .5 HP (H)

11TH Character – Lower (outer) Mechanical Seal
1 = Standard – Silicon carbide/silicon carbide, BUNA and 304 SS metal parts.
2 = Optional – Silicon carbide/tungsten carbide, BUNA and 304 SS metal parts.

12th Cord Length
A = 20′ (standard) D = 30′ F = 50′ J = 100′

13th Options
1 = Silicon bronze impeller
2 = Epoxy coating
3 = Both 1 & 2

MODELS AND MOTOR INFORMATION

Order Number	HP	Phase	Volts	RPM	Impeller Dia. (in.)	Code	Maximum Amps	Locked Rotor Amps	KVA Code	Full Load Motor Eff. %	Resistance Start	Line-Line	Power Cable Size	Weight (lbs.)
2DES1A1T2F1A	.33	1	115	1750	5.38	F	10.7	30.0	M	54	11.9	1.7	16/3	62
2DES1A2T2F1A	.33	1	208	1750	5.38	F	6.8	19.5	K	51	9.1	4.2	16/3	62
2DES1A3T2F1A	.33	1	230	1750	5.38	F	4.9	14.1	L	53	14.5	8.0	16/3	62
2DES1A1T2E1A	.33	1	115	1750	5.38	E	10.7	30.0	M	54	11.9	1.7	16/3	62
2DES1A2T2E1A	.33	1	208	1750	5.38	E	6.8	19.5	K	51	9.1	4.2	16/3	62
2DES1A3T2E1A	.33	1	230	1750	5.38	E	4.9	14.1	L	53	14.5	8.0	16/3	62
2DES1C1T1D1A	.5	1	115	3450	3.56	D	14.5	46.0	M	54	7.5	1.0	16/3	85
2DES1C2T1D1A	.5	1	208	3450	3.56	D	8.1	31.0	K	68	9.7	2.4	16/3	85
2DES1C3T1D1A	.5	1	230	3450	3.56	D	7.3	34.5	M	53	9.6	4.0	16/3	85
2DES3C3T1D1A	.5	3	230	3450	3.56	D	3.3	18.8	R	70	NA	5.8	14/4	85
2DES3C4T1D1A	.5	3	460	3450	3.56	D	1.7	9.4	R	70	NA	23.2	14/4	85
2DES3C5T1D1A	.5	3	575	3450	3.56	D	1.4	7.5	R	62	NA	35.3	14/4	85
2DES1C1T1H1A	.5	1	115	3450	3.88	H	14.5	46.0	M	54	7.5	1.0	16/3	85
2DES1C2T1H1A	.5	1	208	3450	3.88	H	8.1	31.0	K	68	9.7	2.4	16/3	85
2DES1C3T1H1A	.5	1	230	3450	3.88	H	7.3	34.5	M	53	9.6	4.0	16/3	85
2DES3C3T1H1A	.5	3	230	3450	3.88	H	3.6	18.8	R	70	NA	5.8	14/4	85
2DES3C4T1H1A	.5	3	460	3450	3.88	H	1.8	9.4	R	70	NA	23.2	14/4	85
2DES3C5T1H1A	.5	3	575	3450	3.88	H	1.5	7.5	R	62	NA	35.3	14/4	85
2DES1D2T1C1A	.75	1	208	3450	4.06	C	11.0	31.0	K	68	9.7	2.4	14/3	97
2DES1D3T1C1A	.75	1	230	3450	4.06	C	10.0	27.5	J	65	12.2	2.7	14/3	97
2DES3D3T1C1A	.75	3	230	3450	4.06	C	5.4	15.7	K	68	NA	8.6	14/4	97
2DES3D4T1C1A	.75	3	460	3450	4.06	C	2.7	7.9	K	68	NA	34.2	14/4	97
2DES3D5T1C1A	.75	3	575	3450	4.06	C	2.2	9.9	L	78	NA	26.5	14/4	97
2DES1E2T1B1A	1	1	208	3450	4.44	B	14.0	59.0	K	68	9.3	1.1	14/3	99
2DES1E3T1B1A	1	1	230	3450	4.44	B	12.5	36.2	J	69	10.3	2.1	14/3	99
2DES3E2T1B1A	1	3	200	3450	4.44	B	8.1	37.6	M	77	NA	2.7	14/4	99
2DES3E3T1B1A	1	3	230	3450	4.44	B	7.0	24.1	L	79	NA	4.1	14/4	99
2DES3E4T1B1A	1	3	460	3450	4.44	B	3.5	12.1	L	79	NA	16.2	14/4	99
2DES3E5T1B1A	1	3	575	3450	4.44	B	2.8	9.9	L	78	NA	26.5	14/4	99
2DES1F2T1A1A	1.5	1	208	3450	4.56	A	17.5	59.0	K	68	9.3	1.1	14/3	99
2DES1F3T1A1A	1.5	1	230	3450	4.56	A	15.7	50.0	H	68	11.3	1.6	14/3	99
2DES3F2T1A1A	1.5	3	200	3450	4.56	A	10.6	40.6	K	79	NA	1.9	14/4	99
2DES3F3T1A1A	1.5	3	230	3450	4.56	A	9.2	31.7	K	78	NA	2.9	14/4	99
2DES3F4T1A1A	1.5	3	460	3450	4.56	A	4.6	15.9	K	78	NA	11.4	14/4	99
2DES3F5T1A1A	1.5	3	575	3450	4.56	A	3.7	13.1	K	75	NA	16.9	14/4	99
2DES1F2T1G1A	1.5	1	208	3450	5.50	G	17.5	59.0	K	68	9.3	1.1	14/3	99
2DES1F3T1G1A	1.5	1	230	3450	5.50	G	15.7	50.0	H	68	11.3	1.6	14/3	99
2DES3F2T1G1A	1.5	3	200	3450	5.50	G	10.6	40.6	K	79	NA	1.9	14/4	99
2DES3F3T1G1A	1.5	3	230	3450	5.50	G	9.2	31.7	K	78	NA	2.9	14/4	99
2DES3F4T1G1A	1.5	3	460	3450	5.50	G	4.6	15.9	K	78	NA	11.4	14/4	99
2DES3F5T1G1A	1.5	3	575	3450	5.50	G	3.7	13.1	K	75	NA	16.9	14/4	99

APPLICATION DATA

Maximum Solid Size	¾"
Minimum Casing Thickness	5⁄16"
Casing Corrosion Allowance	⅛"
Maximum Working Pressure	55 PSI
Maximum Submergence	50 feet
Minimum Submergence	Fully submerged for continuous operation
	6" below top of motor for intermittent operation
Maximum Environmental Temperature	40°C (104°F) continuous operation
	60°C (140°F) intermittent operation

CONSTRUCTION DETAILS

Power Cable – Type	16/3, type SJTOW: single phase, ⅓ & ½ HP
	14/3, type STOW: single phase, ¾ & 1½ HP
	14/4, type STOW: all three phase
Sensor Cable – Type	16/2, type SJTOW: seal sensor only
	16/4, type SJTOW: optional seal/heat sensor
Motor Cover	Gray Cast Iron – ASTM A48 Class 30
Bearing Housing	Gray Cast Iron – ASTM A48 Class 30
Seal Housing	Gray Cast Iron – ASTM A48 Class 30
Casing	Gray Cast Iron – ASTM A48 Class 30
Impeller	Gray Cast Iron – ASTM A48 or Cast Bronze – ASTM B584 C87600
Motor Shaft	AISI 400 Series Stainless Steel
Motor Design	NEMA 48 Frame, oil filled with Class F Insulation
	Capacitor Start - Single Phase
Motor Overload Protection	Single Phase: on winding thermal overload protection
	Three Phase: require ambient compensated Class 10, quick trip overloads in the control panel.
Motor Seal Fail (Moisture) Detection	Seal fail sensor in an oil-filled seal chamber. Connect to an optional relay in control panel.
Optional Motor Thermal Protection	Normally closed on-winding thermostats open at 275° F (135 °C) and close at 112° F (78° C). Require terminal connection in the control panel.
External Hardware	300 Series Stainless Steel
Impeller Type	Semi-opened with pump out vanes on back shroud
Oil Capacity – Seal Chamber	10 ounces
Oil Capacity – Motor Chamber	4.0 quarts

STANDARD PARTS

Ball Bearing	Upper	Single row ball – SKF™ 6203-2Z
	Lower	Single row ball – SKF™ 6203-2Z
Mechanical Seals – Standard	Upper	Carbon/Ceramic; Type 16
	Lower	Silicon Carbide/Silicon Carbide; Type 16
Mechanical Seals – Optional Lower		Silicon Carbide/Tungsten Carbide; Type 16
O-Ring – Stuffing Box		BUNA-N, AS 568A-163
O-Ring – Motor Cover		BUNA-N, AS 568A-166

DIMENSIONS

(All dimensions are in inches. Do not use for construction purposes.)

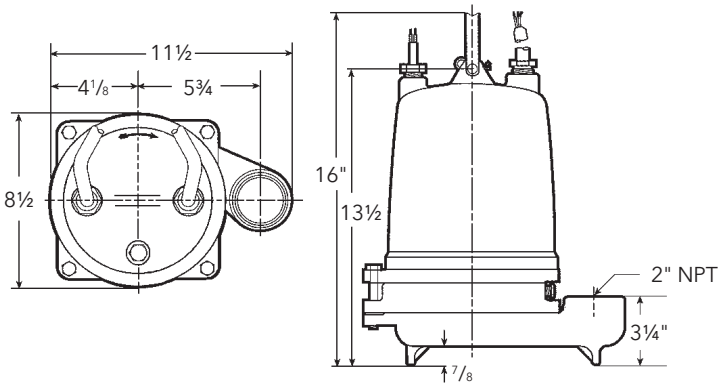

MATERIALS OF CONSTRUCTION

Item No.	Part Name	Material	
		Standard	Optional
1	Impeller	1003	1179
2	Castings	1003	
3	Shaft–threaded	400 Series SS	
4	Fasteners	300 Series SS	
5	Ball bearings	Steel	
6	Power cable	STOW, 20 feet	Additional lengths
	Seal sensor cable		
7	O-ring	BUNA-N	

Item No.	Outer Mech. Seal	Service	Rotary	Stationary	Elasto-mers	Metal Parts
8	OPT	Heavy duty	Silicon Carbide	Tungsten Carbide	BUNA-N	300 Series SS
	STD	Mild abrasives	Silicon Carbide		BUNA-N	300 Series SS

Material Code	Engineering Standard
1003	Cast iron – ASTM A48 Class 30
1179	Silicon bronze – ASTM B584 C87600

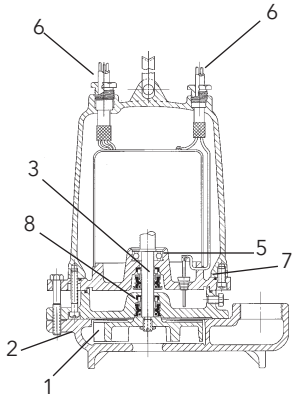

xylem
Let's Solve Water

Xylem Inc.
2881 East Bayard Street Ext., Suite A
Seneca Falls, NY 13148
Phone: (866) 325-4210
Fax: (888) 322-5877
www.xylem.com/bellgossett

Xylem and Bell & Gossett are registered trademarks of Xylem Inc. or one of its subsidiaries.
All other trademarks or registered trademarks are property of their respective owners.
© 2024 Xylem Inc. B2DES R5 Feburary 2024