

60 Hz

6GZ612, 6GZ616, 6GZ622 6GZ631, 6GZ646, 6GZ660 Series

6" SUBMERSIBLE
ELECTRIC PUMPS

Cod. G91005671 Rev. C Ed.09/2017

GOULDS WATER TECHNOLOGY
a xylem brand

GOULDS WATER TECHNOLOGY
a xylem brand

CONTENTS

Hydraulic performance range 4

Series Specifications 5

Table of Materials 7

Hydraulic Performance Range 9

Accessories 49

Motor - Control Panel Combination Table 50

Cooling shrouds 53

ISO Threaded flanges and supporting collars 54

Technical Appendix 55

6GZ612, 6GZ616, 6GZ622, 6GZ631, 6GZ646, 6GZ660 SERIES HYDRAULIC PERFORMANCE RANGE

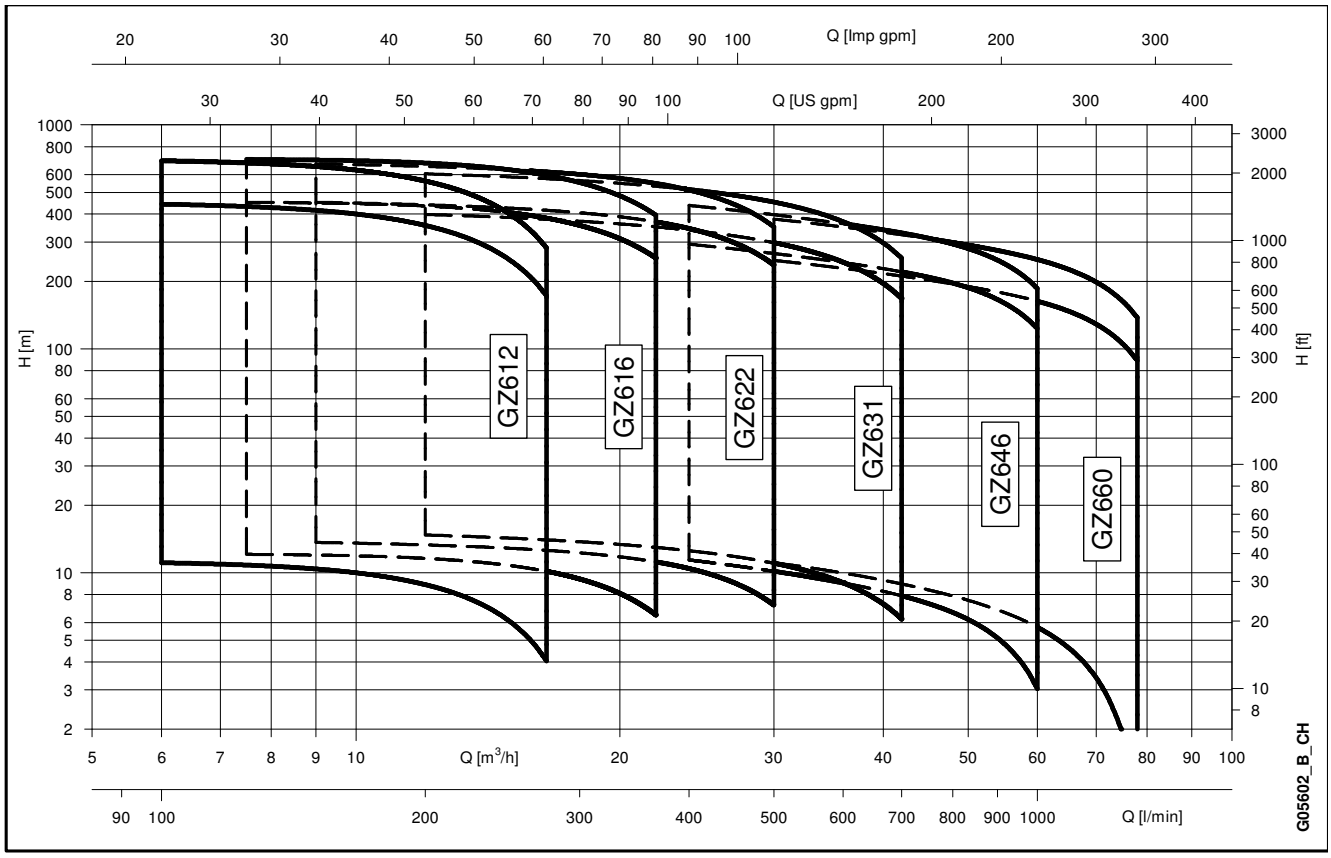

GOULDS WATER TECHNOLOGY
a xylem brand

6" Submersible Electric Pumps

G6Z612, G6Z616 G6Z622, G6Z631 G6Z646, G6Z660 Series

MARKET SECTORS
RESIDENTIAL, AGRICULTURE, INDUSTRY.

APPLICATIONS
- Water supply from deep wells.
- Pressure boosting and water distribution
- Supply of surge tanks and reservoirs.
- Firefighting and washing systems.
- Water table level control.
- Irrigation.
- Mines.



SPECIFICATIONS
- **Delivery**: up to 90 m^3/h.
- **Head**: up to 700 m.
- **Maximum overall diameter of pump:**
  - Standard version: 142 mm (one cable guard included).
  - High head version:
    177 mm (one cable guard and 6" motor coupling included).
    193 mm (one cable guard and 8" motor coupling included).
- **Maximum pump immersion depth:**
  300 m (with L4C motor)
  350 m (with L6W and L8W motors).
- **Maximum permissible quantity of suspended sand:**
  100 g/m^3.
- **Delivery port:**
  -Standard version:Rp 2 1/2" for G6Z612-G6Z616-G6Z622 versions.
  Rp 3" for G6Z631-G6Z646-G6Z660 versions.
  - High head version: Rp 3" for G6Z612-G6Z616-G6Z622-6Z631 versions.
  Rp 4" for G6Z646-G6Z660 versions.
- **Construction materials available:**
  AISI304 stainless steel (GZ6),
  AISI316 stainless steel (GZN6).
- **All the pumps can operate in the horizontal position (see operating limits in the motors section).**

CONSTRUCTION CHARACTERISTICS
- **Head and motor support** made of microcast stainless steel.
- **Delivery port** equipped with holes for safety hooks .
- Stainless steel **integrated non-return valve**.
- Stainless steel **impeller** with removable wear ring.
- Stainless steel **shaft** protected by shaft sleeves.
- **Replaceable coupling**.

ACCESSORIES
- Coupling flanges.
- Control panels.
- Drop cables.
- Cooling shrouds.

6GZ6 PUMPS SERIES
PUMP SECTION AND LIST OF MAIN COMPONENTS

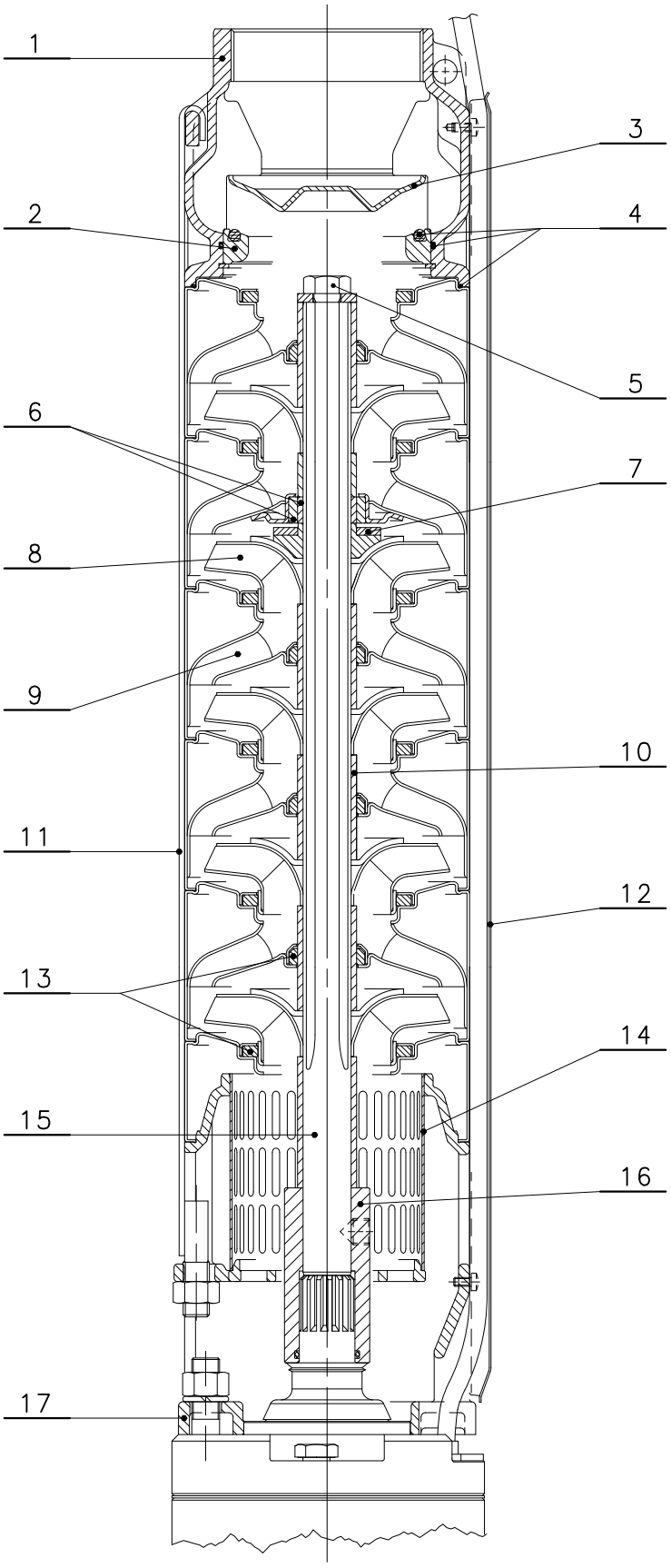

GOULDS WATER TECHNOLOGY
a xylem brand

TABLE OF MATERIALS
6GZ6

REF. N°	NAME	MATERIAL	REFERENCE STANDARDS	
			EUROPE	USA
1	Discharge head	Stainless steel	EN 10213-4 - GX5CrNi19-10 (1.4308)	ASTM CF-8 (AISI 304 cast)
2	Valve support	Stainless steel	EN 10213-4 - GX5CrNi19-10 (1.4308)	ASTM CF-8 (AISI 304 cast)
3	Valve	Stainless steel	EN 10088-1 - X5CrNi18-10 (1.4301)	AISI 304
4	Elastomers	EPDM		
5	Bolts and screws	Stainless steel	EN 10088-1 - X5CrNi18-10 (1.4301)	AISI 304
6	Shaft sleeve and bushing	Tungsten carbide		
7	Thrust bearing	PTFE+Graphite		
8	Impeller	Stainless steel	EN 10088-1 - X5CrNi18-10 (1.4301)	AISI 304
9	Diffuser	Stainless steel	EN 10088-1 - X5CrNi18-10 (1.4301)	AISI 304
10	Spacer	Stainless steel	EN 10088-1 - X17CrNi16-2 (1.4057)	AISI 431
11	Tie rod	Stainless steel	EN 10088-1 - X5CrNi18-10 (1.4301)	AISI 304
12	Cable guard	Stainless steel	EN 10088-1 - X5CrNi18-10 (1.4301)	AISI 304
13	Wear rings	Technopolymer PPO		
14	Strainer	Stainless steel	EN 10088-1 - X5CrNi18-10 (1.4301)	AISI 304
15	Shaft	Stainless steel	EN 10088-1 - X17CrNi16-2 (1.4057)	AISI 431
16	Coupling	Stainless steel	EN 10088-1 - X17CrNi16-2 (1.4057)	AISI 431
17	Lower support	Stainless steel	EN 10213-4 - GX5CrNi19-10 (1.4308)	ASTM CF-8 (AISI 304 cast)

z6-50-304-en_c_tm

TABLE OF MATERIALS
6GZN6

REF. N°	NAME	MATERIAL	REFERENCE STANDARDS	
			EUROPE	USA
1	Discharge head	Stainless steel	EN 10213-4 - GX5CrNiMo19-11-2 (1.4408)	ASTM CF-8M (AISI 316 cast)
2	Valve support	Stainless steel	EN 10213-4 - GX5CrNiMo19-11-2 (1.4408)	ASTM CF-8M (AISI 316 cast)
3	Valve	Stainless steel	EN 10088-1 - X2CrNiMo17-12-2 (1.4404)	AISI 316L
4	Elastomers	EPDM		
5	Bolts and screws	Stainless steel	EN 10088-1 - X5CrNiMo17-12-2 (1.4401)	AISI 316
6	Shaft sleeve and bushing	Tungsten carbide		
7	Thrust bearing	PTFE+Graphite		
8	Impeller	Stainless steel	EN 10088-1 - X2CrNiMo17-12-2 (1.4404)	AISI 316L
9	Diffuser	Stainless steel	EN 10088-1 - X2CrNiMo17-12-2 (1.4404)	AISI 316L
10	Spacer	Duplex stainless steel	EN 10088-1 - X2CrNiN23-4 (1.4362)	UNS S 32304
11	Tie rod	Stainless steel	EN 10088-1 - X2CrNiMo17-12-2 (1.4404)	AISI 316L
12	Cable guard	Stainless steel	EN 10088-1 - X2CrNiMo17-12-2 (1.4404)	AISI 316L
13	Wear rings	Technopolymer PPO		
14	Strainer	Stainless steel	EN 10088-1 - X2CrNiMo17-12-2 (1.4404)	AISI 316L
15	Shaft	Duplex stainless steel	EN 10088-1 - X2CrNiMoN22-5-3 (1.4462)	UNS S 31803
16	Coupling	Duplex stainless steel	EN 10088-1 - X2CrNiN23-4 (1.4362)	UNS S 32304
17	Lower support	Stainless steel	EN 10213-4 - GX5CrNiMo19-11-2 (1.4408)	ASTM CF-8M (AISI 316 cast)

z6-50-316-en_c_tm

6GZ6 SERIES
IDENTIFICATION CODE (PUMP)

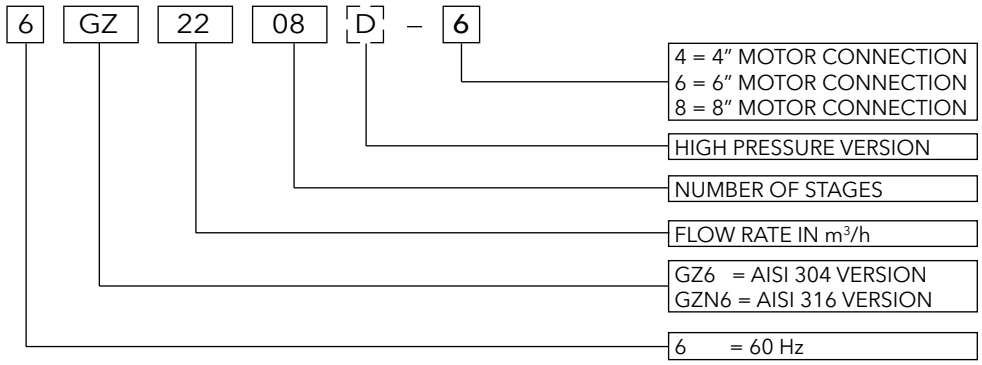

EXAMPLE : 6GZ622 08 - 6
6" Pump at 60 Hz, AISI 304, flow rate 22 m³/h, 8 stages, with 6" motor connection.

IDENTIFICATION CODE (ELECTRIC PUMP)

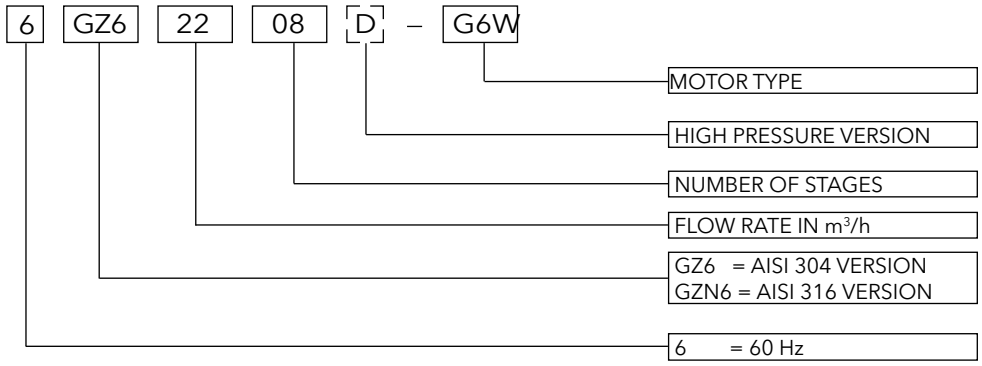

EXAMPLE : 6GZ622 08 - G6W
6" Electric pump at 60 Hz, AISI 304, flow rate 22 m³/h, 8 stages, coupled to a 6" motor G6W.

RATING PLATE

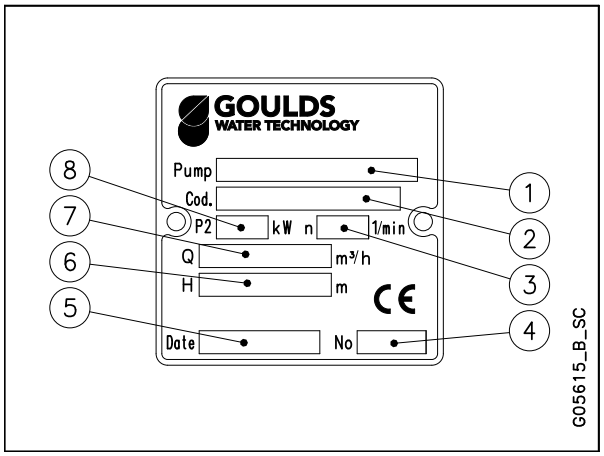

LEGEND

1 - Pump type

2 - Code

3 - Speed

4 - Serial number

5 - Date of manufacture

6 - Head range

7 - Delivery range

8 - Rated output

GOULDS WATER TECHNOLOGY
a xylem brand

6GZ6 SERIES
HYDRAULIC PERFORMANCE RANGE

6GZ6	~ 3500 [rpm]	ISO 9906:2012 - Grade 3B

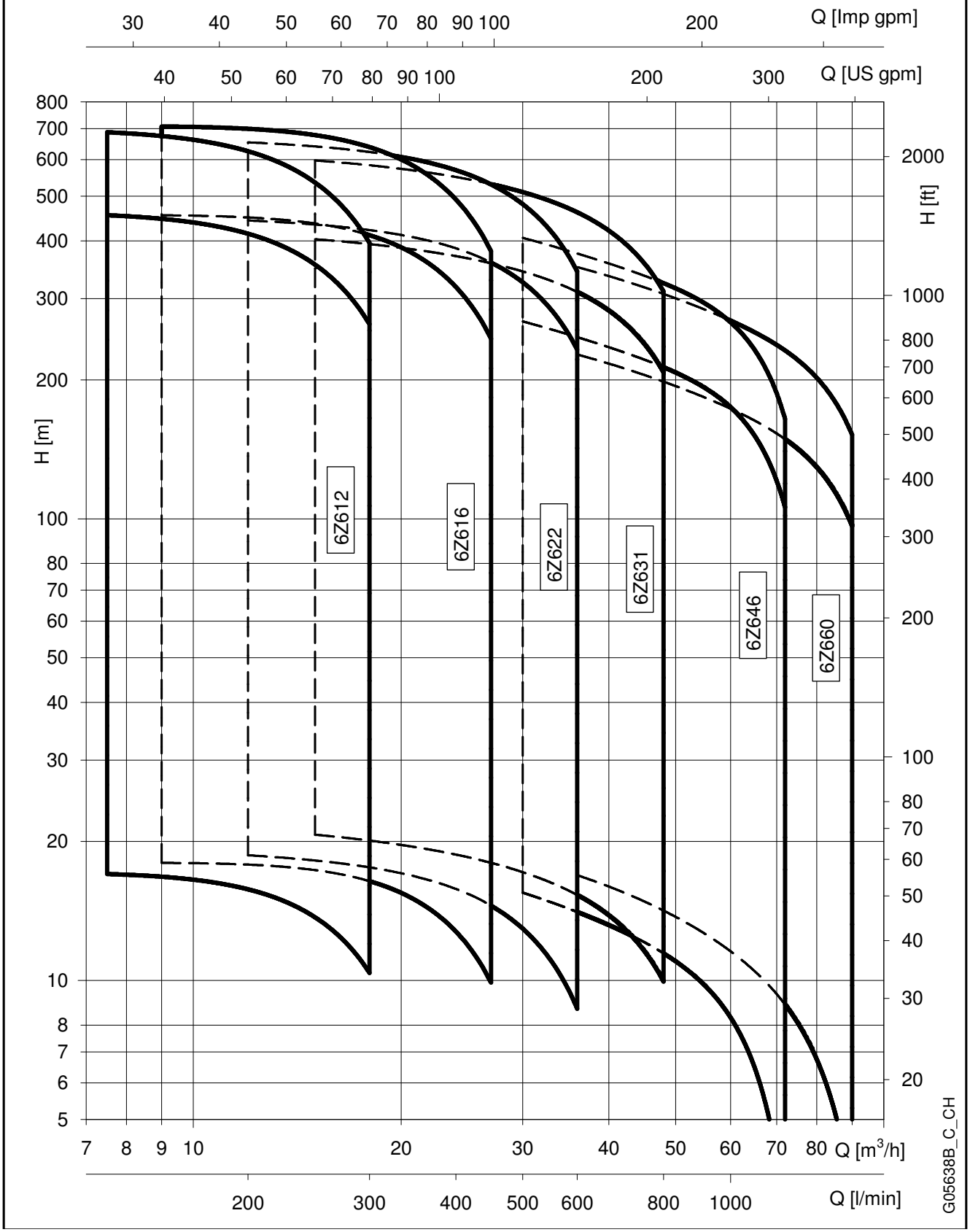

GOULDS WATER TECHNOLOGY
a xylem brand

6GZ612 SERIES, 1 TO 13 STAGES ELECTROPUMPS OPERATING CHARACTERISTICS

PUMP TYPE	RATED POWER		Q = DELIVERY					
			l/min 0	125	150	200	250	300
			m^3/h 0	7,5	9	12	15	18
	kW	S.F.	H = TOTAL HEAD METRES COLUMN OF WATER					
6GZ612 01	0,75	1,40	17,2	17,0	16,8	15,7	13,7	10,4
6GZ612 02	1,5	1,25	34,0	33,0	32,4	30,1	25,8	19,0
6GZ612 03	2,2	1,15	50,4	48,4	47,4	43,7	37,0	26,7
6GZ612 04	3	1,15	68,5	66,6	65,5	61,0	52,5	38,9
6GZ612 05	4	1,15	85,9	83,9	82,6	77,1	66,5	49,7
6GZ612 06	5,5	1,15	103,6	101,7	100,1	93,3	80,5	60,3
6GZ612 07	5,5	1,15	120,5	117,7	115,8	107,7	92,5	68,8
6GZ612 08	7,5	1,15	137,5	135,0	132,5	123,0	105,2	77,4
6GZ612 09	7,5	1,15	154,3	151,0	148,1	137,1	116,9	85,5
6GZ612 10	7,5	1,15	171,0	166,7	163,5	151,0	128,3	93,2
6GZ612 11	9,3	1,15	190,3	185,1	181,7	168,7	144,3	106,2
6GZ612 12	9,3	1,15	207,2	200,8	197,0	182,5	155,7	114,2
6GZ612 13	9,3	1,15	224,0	216,5	212,2	196,1	166,9	121,7

6GZ612-1-60-en_b_th

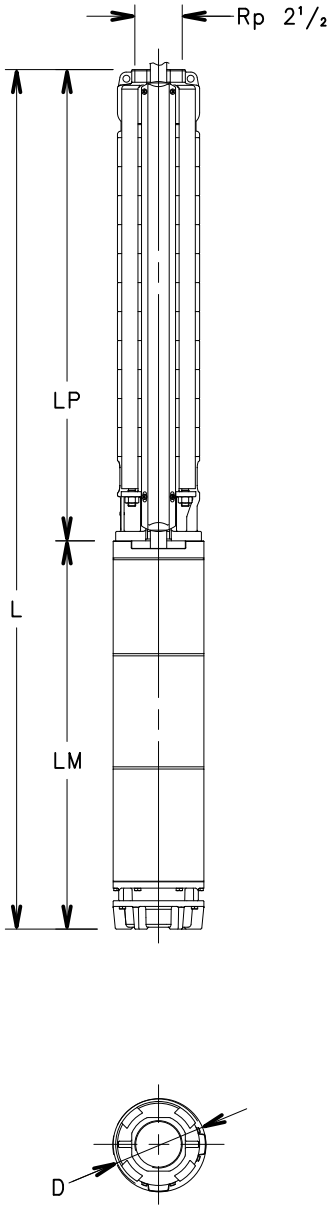

ELECTROPUMPS DIMENSIONS AND WEIGHTS

ELECTRIC PUMP TYPE	RATED POWER		DIMENSIONS (mm)					WEIGHT
	kW	S.F.	L	LM	LP	ø D		
						1 Cable	2 Cables	Kg
6GZ612 01-G4C	0,75	1,40	666	286	380	142	144	19
6GZ612 02-G4C	1,5	1,25	817	391	426	142	144	24
6GZ612 03-G4C	2,2	1,15	883	411	472	142	144	26
6GZ612 04-G4C	3	1,15	1062	544	518	142	144	34
6GZ612 05-G4C	4	1,15	1178	614	564	142	144	38
6GZ612 06-G4C	5,5	1,15	1294	684	610	142	144	42
6GZ612 07-G4C	5,5	1,15	1340	684	656	142	144	43
6GZ612 08-G4C	7,5	1,15	1466	764	702	142	144	48
6GZ612 09-G4C	7,5	1,15	1512	764	748	142	144	49
6GZ612 10-G4C	7,5	1,15	1558	764	794	142	144	50
6GZ612 05-G6W	4	1,15	1147	583	564	144	146	52
6GZ612 06-G6W	5,5	1,15	1223	613	610	144	146	57
6GZ612 07-G6W	5,5	1,15	1269	613	656	144	146	58
6GZ612 08-G6W	7,5	1,15	1355	653	702	144	146	63
6GZ612 09-G6W	7,5	1,15	1401	653	748	144	146	65
6GZ612 10-G6W	7,5	1,15	1447	653	794	144	146	66
6GZ612 11-G6W	9,3	1,15	1523	683	840	144	146	71
6GZ612 12-G6W	9,3	1,15	1569	683	886	144	146	72
6GZ612 13-G6W	9,3	1,15	1615	683	932	144	146	73

6GZ612-1-60-en_a_td

GOULDS WATER TECHNOLOGY
a xylem brand

6GZ612 SERIES, 1 TO 13 STAGES
ELECTROPUMPS OPERATING CHARACTERISTICS

6GZ612	~ 3500 [rpm]	ISO 9906:2012 - Grade 3B

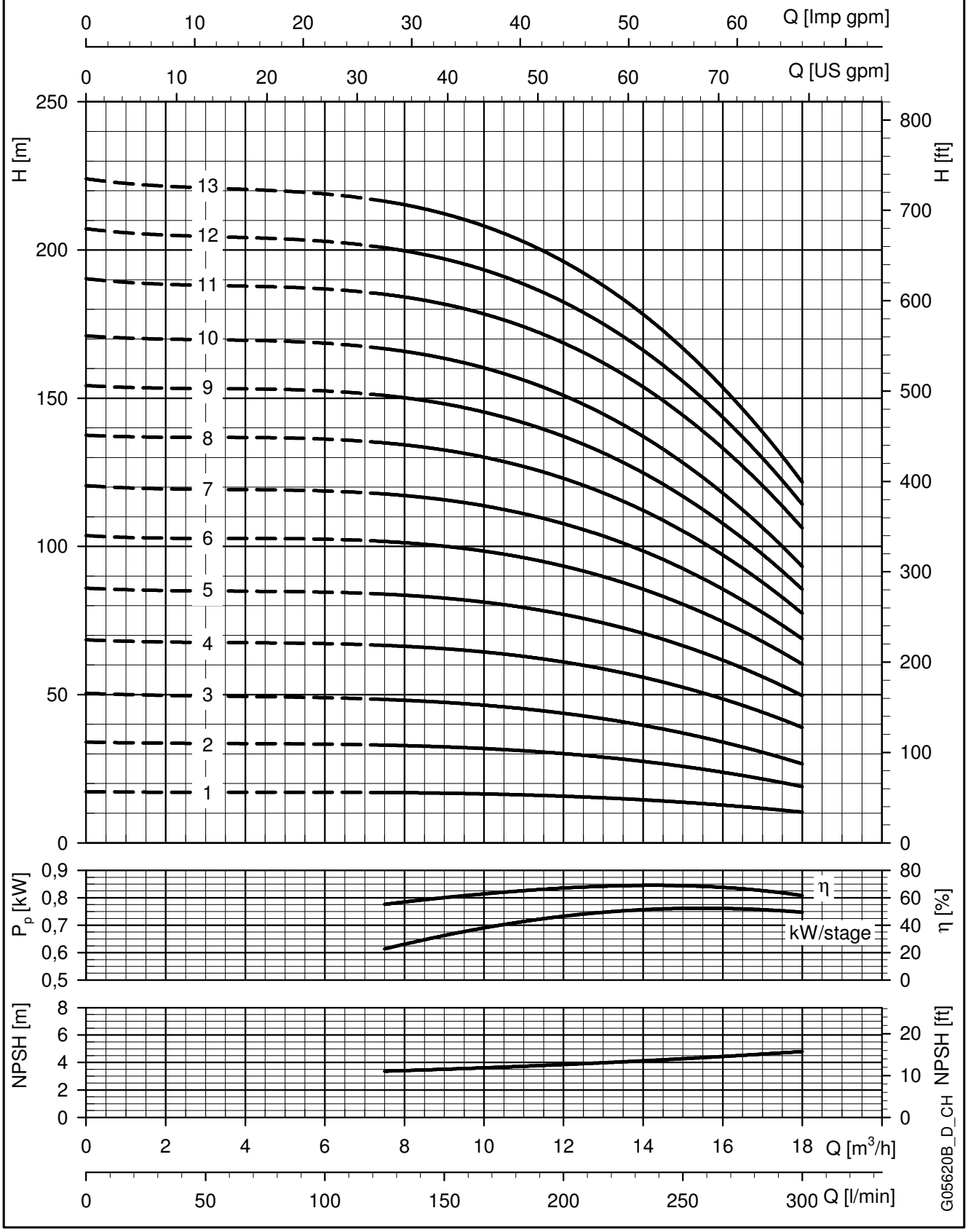

These performances are valid for liquids with density ρ = 1.0 Kg/dm³ and kinematic viscosity ν = 1 mm²/sec.

GOULDS WATER TECHNOLOGY
a xylem brand

6GZ612 SERIES, 14 TO 27 STAGES ELECTROPUMPS OPERATING CHARACTERISTICS

PUMP TYPE	RATED POWER		Q = DELIVERY					
			l/min 0	125	150	200	250	300
			m^3/h 0	7,5	9	12	15	18
	kW	S.F.	H = TOTAL HEAD METRES COLUMN OF WATER					
6GZ612 14	11	1,15	241,5	234,5	230,2	213,0	181,1	132,3
6GZ612 15	11	1,15	258,4	250,1	245,3	226,6	192,3	139,8
6GZ612 16	13	1,15	275,8	267,7	262,5	242,8	206,7	151,3
6GZ612 17	13	1,15	292,6	283,3	277,6	256,3	217,7	158,7
6GZ612 18	13	1,15	309,4	298,8	292,7	269,7	228,4	165,8
6GZ612 19	15	1,15	328,5	318,9	312,8	289,4	246,7	180,7
6GZ612 20	15	1,15	345,4	334,6	328,1	303,2	258,0	188,5
6GZ612 21	15	1,15	362,3	350,1	343,1	316,7	269,1	196,0
6GZ612 22	18,5	1,15	378,1	368,7	362,1	336,0	287,9	213,0
6GZ612 23	18,5	1,15	394,9	384,6	377,5	350,0	299,4	220,9
6GZ612 24	18,5	1,15	411,6	400,4	393,0	363,9	310,8	228,7
6GZ612 25	18,5	1,15	428,3	415,9	407,9	377,5	322,2	236,8
6GZ612 26	18,5	1,15	444,9	431,5	423,1	391,2	333,3	244,3
6GZ612 27	22	1,15	465,6	454,7	446,6	414,7	355,7	263,9

6GZ612-2-60-en_b_th

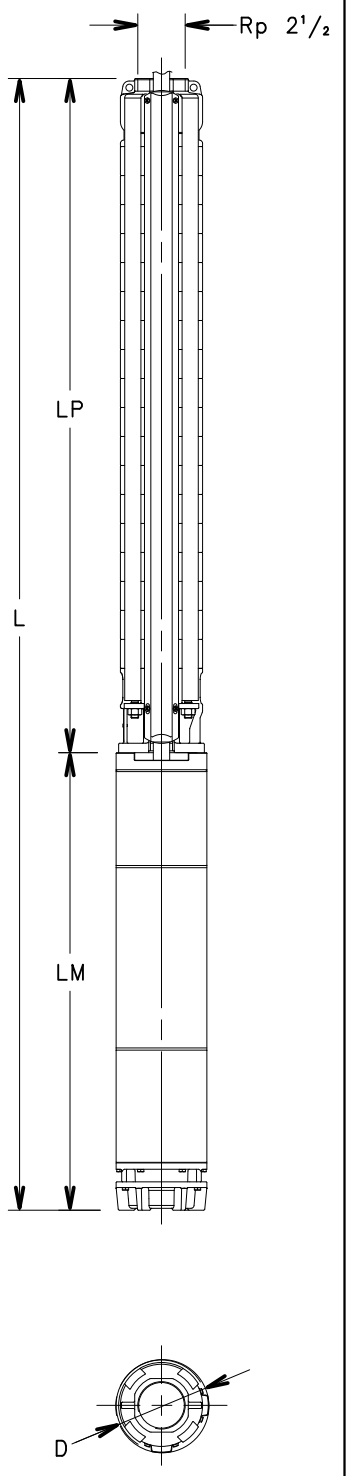

ELECTROPUMPS DIMENSIONS AND WEIGHTS

ELECTRIC PUMP TYPE	RATED POWER		DIMENSIONS (mm)					WEIGHT
	kW	S.F.	L	LM	LP	ø D		
						1 Cable	2 Cables	Kg
6GZ612 14-G6W	11	1,15	1701	723	978	144	146	78
6GZ612 15-G6W	11	1,15	1747	723	1024	144	146	80
6GZ612 16-G6W	13	1,15	1833	763	1070	144	146	85
6GZ612 17-G6W	13	1,15	1879	763	1116	144	146	86
6GZ612 18-G6W	13	1,15	1925	763	1162	144	146	87
6GZ612 19-G6W	15	1,15	2087	833	1254	144	146	97
6GZ612 20-G6W	15	1,15	2133	833	1300	144	146	99
6GZ612 21-G6W	15	1,15	2179	833	1346	144	146	100
6GZ612 22-G6W	18,5	1,15	2295	903	1392	144	146	109
6GZ612 23-G6W	18,5	1,15	2341	903	1438	144	146	110
6GZ612 24-G6W	18,5	1,15	2387	903	1484	144	146	111
6GZ612 25-G6W	18,5	1,15	2433	903	1530	144	146	112
6GZ612 26-G6W	18,5	1,15	2479	903	1576	144	146	114
6GZ612 27-G6W	22	1,15	2565	943	1622	144	146	118

6GZ612-2-60-en_b_td

GOULDS WATER TECHNOLOGY
a xylem brand

6GZ612 SERIES, 14 TO 27 STAGES
ELECTROPUMPS OPERATING CHARACTERISTICS

6GZ612	~ 3500 [rpm]	ISO 9906:2012 - Grade 3B

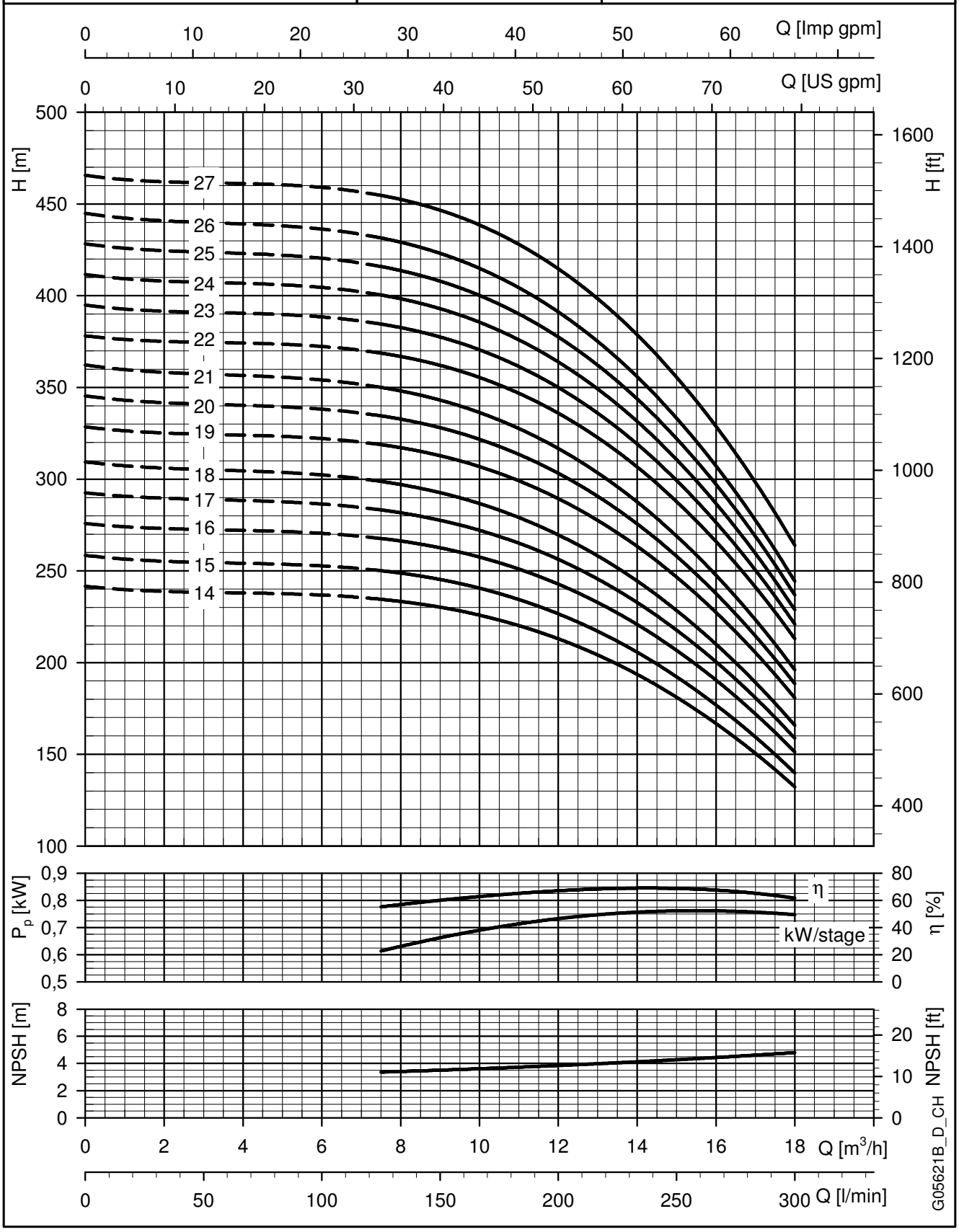

These performances are valid for liquids with density ρ = 1.0 Kg/dm³ and kinematic viscosity ν = 1 mm²/sec.

6GZ612 SERIES, 28 TO 41 STAGES
ELECTROPUMPS OPERATING CHARACTERISTICS

PUMP TYPE	RATED POWER		Q = DELIVERY					
			l/min 0	125	150	200	250	300
			m^3/h 0	7,5	9	12	15	18
	kW	S.F.	H = TOTAL HEAD METRES COLUMN OF WATER					
6GZ612 28D	22	1,15	482,3	470,7	462,2	428,8	367,4	272,1
6GZ612 29D	22	1,15	499,3	486,4	477,4	442,6	378,8	280,1
6GZ612 30D	22	1,15	516,2	502,3	492,9	456,5	390,2	287,8
6GZ612 31D	22	1,15	532,8	517,9	508,0	470,1	401,4	295,5
6GZ612 32D	26	1,15	553,1	542,1	532,8	495,6	426,0	317,5
6GZ612 33D	26	1,15	570,1	558,1	548,4	509,8	438,0	326,1
6GZ612 34D	26	1,15	587,0	574,0	564,0	524,0	449,8	334,4
6GZ612 35D	26	1,15	603,9	590,2	579,6	538,2	461,7	342,8
6GZ612 36D	30	1,15	621,5	608,2	597,7	555,6	477,2	355,0
6GZ612 37D	30	1,15	638,4	624,3	613,3	569,8	489,1	363,4
6GZ612 38D	30	1,15	655,3	640,1	628,7	583,8	500,8	371,7
6GZ612 39D	30	1,15	672,2	656,1	644,3	598,0	512,6	380,0
6GZ612 40D	30	1,15	689,1	672,1	659,9	612,2	524,2	387,9
6GZ612 41D	30	1,15	705,9	687,7	675,0	625,7	535,5	396,0

6GZ612-3-60-en_b_th

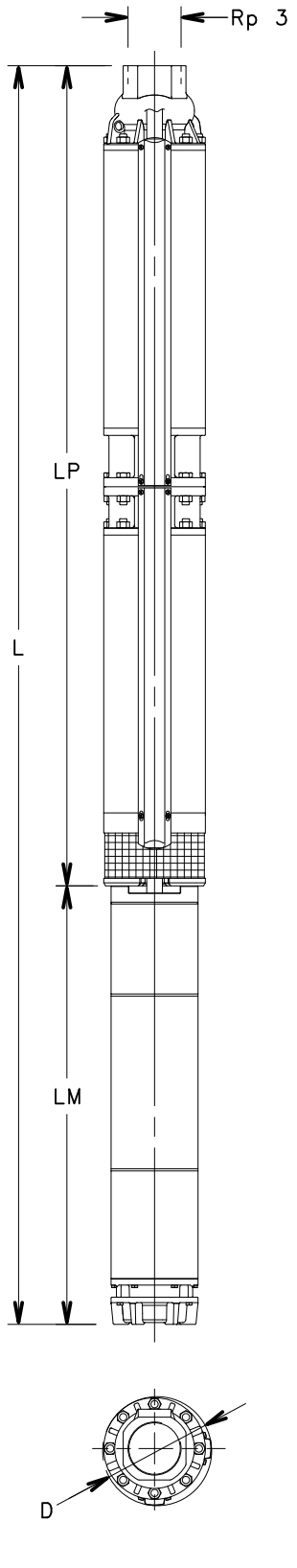

ELECTROPUMPS DIMENSIONS AND WEIGHTS

ELECTRIC PUMP TYPE	RATED POWER		DIMENSIONS (mm)					WEIGHT
	kW	S.F.	L	LM	LP	ø D		
						1 Cable	2 Cables	Kg
6GZ612 28D-G6W	22	1,15	2653	943	1710	177	180	148
6GZ612 29D-G6W	22	1,15	2791	943	1848	177	180	153
6GZ612 30D-G6W	22	1,15	2791	943	1848	177	180	154
6GZ612 31D-G6W	22	1,15	3451	943	2508	177	180	176
6GZ612 32D-G6W	26	1,15	3579	1071	2508	177	180	186
6GZ612 33D-G6W	26	1,15	3579	1071	2508	177	180	186
6GZ612 34D-G6W	26	1,15	3579	1071	2508	177	180	187
6GZ612 35D-G6W	26	1,15	3579	1071	2508	177	180	187
6GZ612 36D-G6W	30	1,15	3659	1151	2508	177	180	196
6GZ612 37D-G6W	30	1,15	3659	1151	2508	177	180	197
6GZ612 38D-G6W	30	1,15	3659	1151	2508	177	180	197
6GZ612 39D-G6W	30	1,15	4073	1151	2922	177	180	208
6GZ612 40D-G6W	30	1,15	4073	1151	2922	177	180	208
6GZ612 41D-G6W	30	1,15	4073	1151	2922	177	180	209

6GZ612-3-60-en_b_td

GOULDS WATER TECHNOLOGY
a xylem brand

6GZ612 SERIES, 28 TO 41 STAGES
ELECTROPUMPS OPERATING CHARACTERISTICS

6GZ612	~ 3500 [rpm]	ISO 9906:2012 - Grade 3B

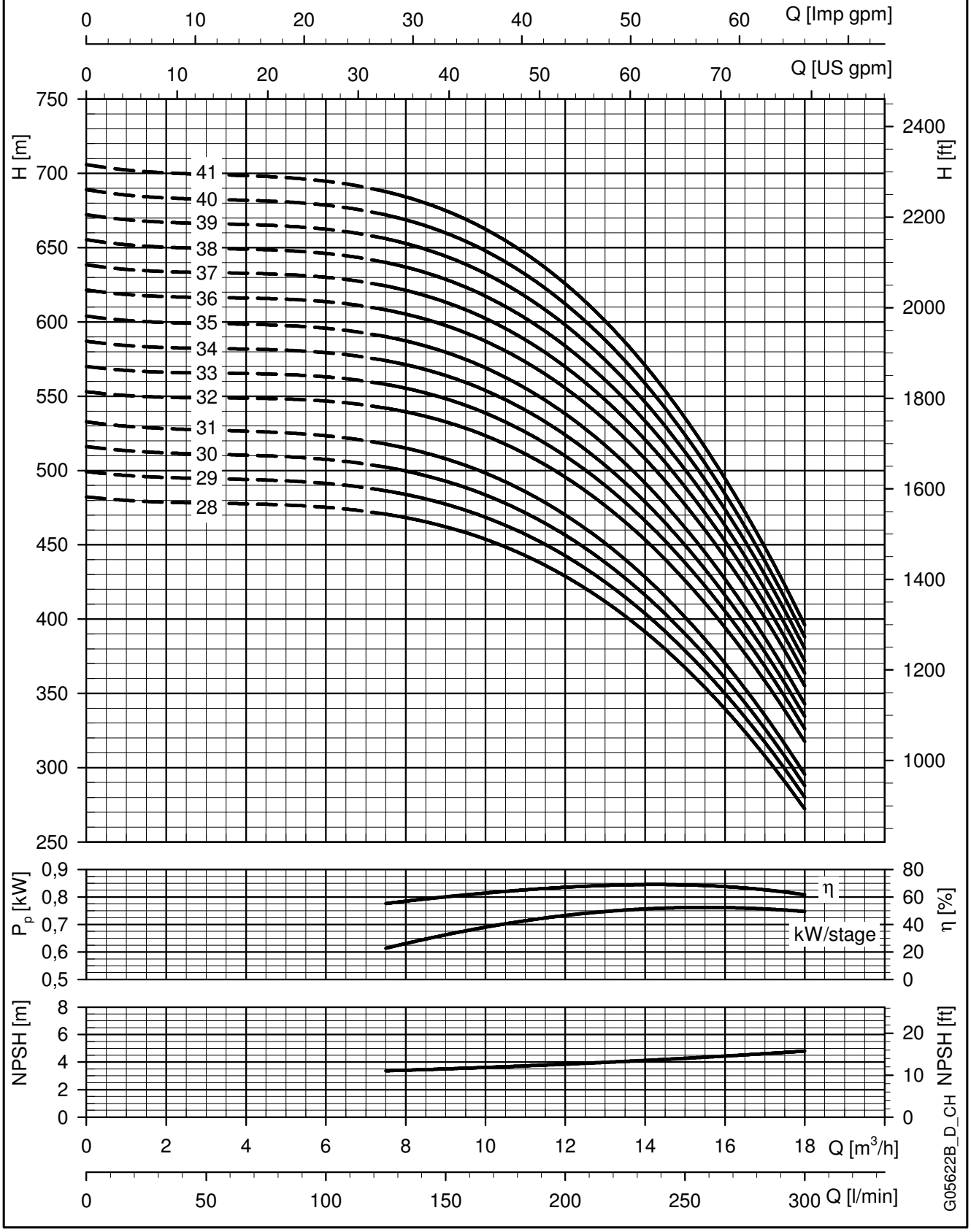

These performances are valid for liquids with density ρ = 1.0 Kg/dm³ and kinematic viscosity ν = 1 mm²/sec.

6GZ616 SERIES, 1 TO 13 STAGES
ELECTROPUMPS OPERATING CHARACTERISTICS

PUMP TYPE	RATED POWER		Q = DELIVERY					
			l/min 0	150	200	300	400	450
			m^3/h 0	9	12	18	24	27
	kW	S.F.	H = TOTAL HEAD METRES COLUMN OF WATER					
6GZ616 01	1,5	1,25	18,1	18,0	17,8	16,4	12,8	9,9
6GZ616 02	3	1,15	36,4	36,2	35,9	33,2	26,0	20,3
6GZ616 03	4	1,15	54,5	54,3	53,9	49,6	38,7	30,1
6GZ616 04	5,5	1,15	72,5	72,7	72,1	66,5	52,2	41,1
6GZ616 05	7,5	1,15	90,6	90,7	90,0	83,0	65,1	51,2
6GZ616 06	7,5	1,15	108,8	108,4	107,4	98,3	76,1	59,3
6GZ616 07	9,3	1,15	127,0	127,1	125,9	115,5	89,7	70,2
6GZ616 08	9,3	1,15	144,8	144,4	142,9	130,4	100,7	78,4
6GZ616 09	11	1,15	163,3	162,8	161,2	147,2	113,9	89,1
6GZ616 10	13	1,15	182,4	181,7	179,7	164,2	126,2	97,2
6GZ616 11	13	1,15	200,2	199,0	196,6	178,9	136,7	104,5
6GZ616 12	15	1,15	219,5	218,3	216,1	198,1	153,5	119,0
6GZ616 13	15	1,15	237,4	235,6	233,0	213,1	164,4	126,9

6GZ616-1-60-en_a_th

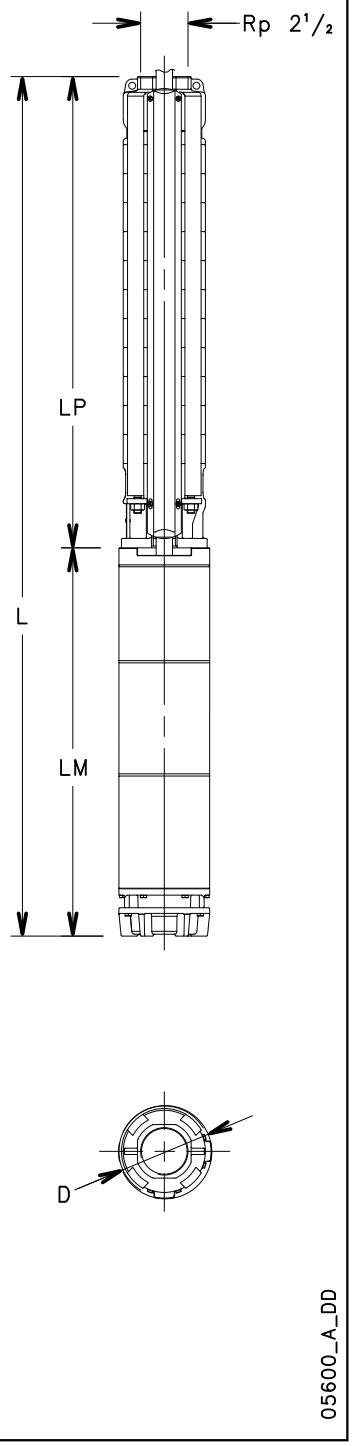

ELECTROPUMPS DIMENSIONS AND WEIGHTS

ELECTRIC PUMP TYPE	RATED POWER		DIMENSIONS (mm)					WEIGHT
	kW	S.F.	L	LM	LP	ø D		
						1 Cable	2 Cables	Kg
6GZ616 01-G4C	1,5	1,25	771	391	380	142	144	23
6GZ616 02-G4C	3	1,15	970	544	426	142	144	31
6GZ616 03-G4C	4	1,15	1086	614	472	142	144	35
6GZ616 04-G4C	5,5	1,15	1202	684	518	142	144	40
6GZ616 05-G4C	7,5	1,15	1328	764	564	142	144	44
6GZ616 06-G4C	7,5	1,15	1374	764	610	142	144	45
6GZ616 03-G6W	4	1,15	1055	583	472	144	146	50
6GZ616 04-G6W	5,5	1,15	1131	613	518	144	146	55
6GZ616 05-G6W	7,5	1,15	1217	653	564	144	146	60
6GZ616 06-G6W	7,5	1,15	1263	653	610	144	146	61
6GZ616 07-G6W	9,3	1,15	1339	683	656	144	146	66
6GZ616 08-G6W	9,3	1,15	1385	683	702	144	146	67
6GZ616 09-G6W	11	1,15	1471	723	748	144	146	73
6GZ616 10-G6W	13	1,15	1557	763	794	144	146	78
6GZ616 11-G6W	13	1,15	1603	763	840	144	146	79
6GZ616 12-G6W	15	1,15	1719	833	886	144	146	88
6GZ616 13-G6W	15	1,15	1765	833	932	144	146	89

6GZ616-1-60-en_b_td

GOULDS WATER TECHNOLOGY
a xylem brand

6GZ616 SERIES, 1 TO 13 STAGES
ELECTROPUMPS OPERATING CHARACTERISTICS

6GZ616	~ 3500 [rpm]	ISO 9906:2012 - Grade 3B

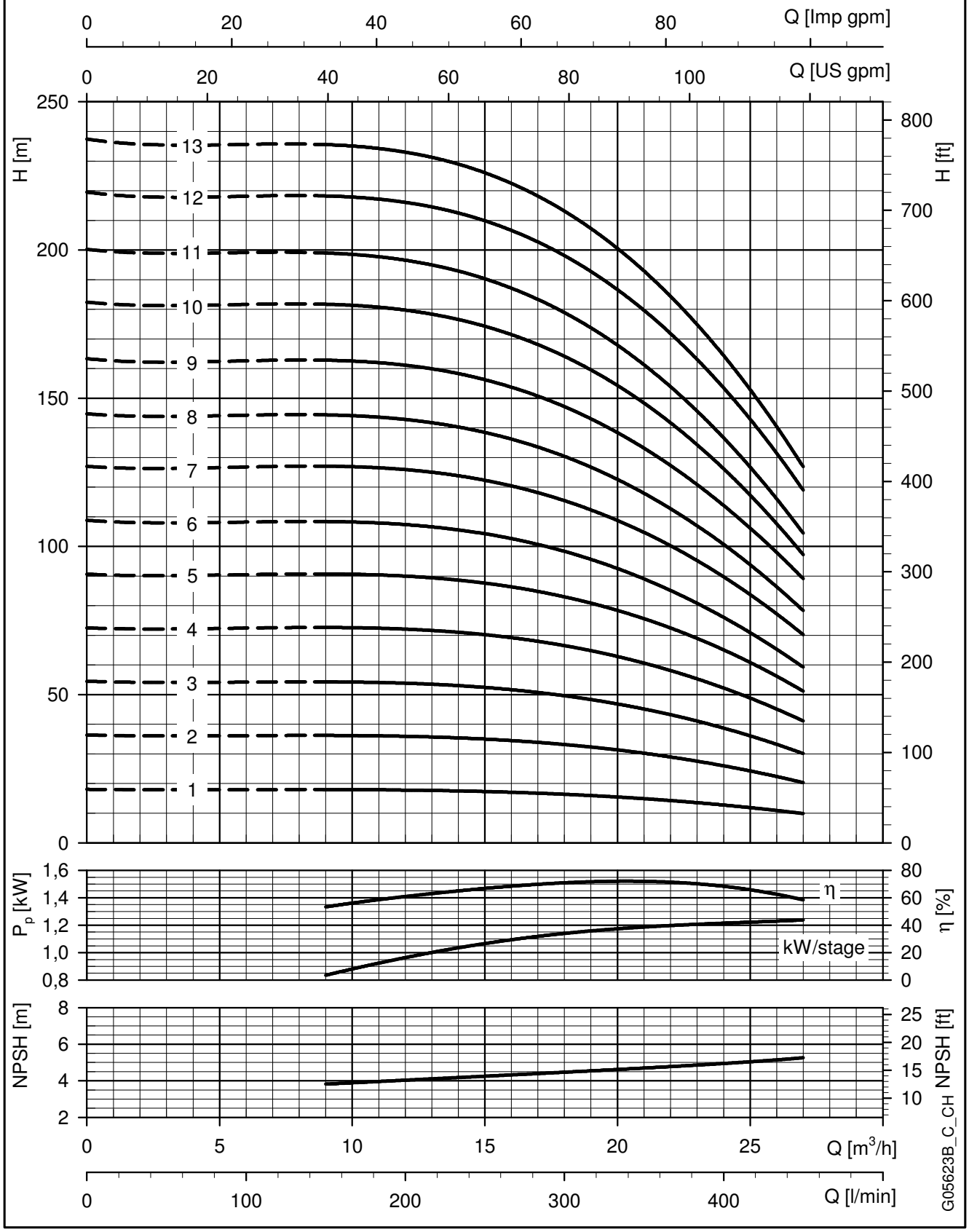

These performances are valid for liquids with density ρ = 1.0 Kg/dm³ and kinematic viscosity ν = 1 mm²/sec.

6GZ616 SERIES, 14 TO 25 STAGES ELECTROPUMPS OPERATING CHARACTERISTICS

PUMP TYPE	RATED POWER		Q = DELIVERY					
			l/min 0	150	200	300	400	450
			m^3/h 0	9	12	18	24	27
	kW	S.F.	H = TOTAL HEAD METRES COLUMN OF WATER					
6GZ616 14	18,5	1,15	255,6	255,3	252,8	232,4	181,4	142,0
6GZ616 15	18,5	1,15	273,6	272,7	270,0	247,6	192,8	151,0
6GZ616 16	18,5	1,15	291,4	290,0	286,9	262,6	203,8	159,0
6GZ616 17	22	1,15	312,0	311,0	307,9	281,1	217,9	171,7
6GZ616 18	22	1,15	329,9	328,5	325,1	296,3	228,9	179,8
6GZ616 19	22	1,15	347,9	346,0	342,0	311,2	239,9	188,1
6GZ616 20	26	1,15	365,2	365,9	362,6	332,9	259,1	202,5
6GZ616 21	26	1,15	383,3	383,5	379,8	348,4	270,4	210,4
6GZ616 22	26	1,15	401,3	401,0	397,0	363,7	281,8	219,0
6GZ616 23	26	1,15	419,1	418,5	414,1	379,0	292,9	226,5
6GZ616 24	30	1,15	437,5	436,9	432,5	396,3	306,9	238,0
6GZ616 25	30	1,15	455,2	454,5	449,8	411,6	318,0	245,9

6GZ616-2-60-en_a_th

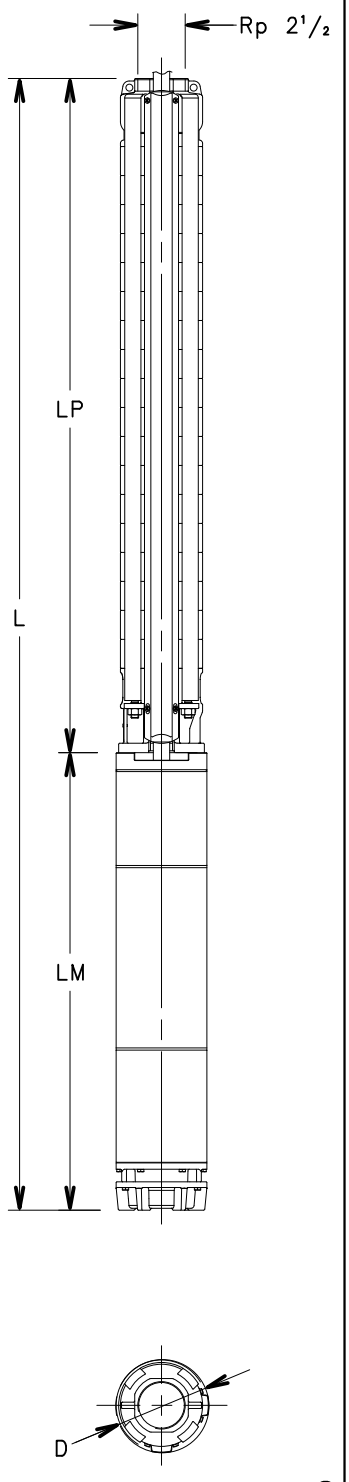

ELECTROPUMPS DIMENSIONS AND WEIGHTS

ELECTRIC PUMP TYPE	RATED POWER		DIMENSIONS (mm)					WEIGHT
	kW	S.F.	L	LM	LP	ø D		
						1 Cable	2 Cables	Kg
6GZ616 14-G6W	18,5	1,15	1881	903	978	144	146	98
6GZ616 15-G6W	18,5	1,15	1927	903	1024	144	146	100
6GZ616 16-G6W	18,5	1,15	1973	903	1070	144	146	101
6GZ616 17-G6W	22	1,15	2059	943	1116	144	146	105
6GZ616 18-G6W	22	1,15	2105	943	1162	144	146	106
6GZ616 19-G6W	22	1,15	2197	943	1254	144	146	108
6GZ616 20-G6W	26	1,15	2371	1071	1300	144	146	119
6GZ616 21-G6W	26	1,15	2417	1071	1346	144	146	120
6GZ616 22-G6W	26	1,15	2463	1071	1392	144	146	121
6GZ616 23-G6W	26	1,15	2509	1071	1438	144	146	122
6GZ616 24-G6W	30	1,15	2635	1151	1484	144	146	131
6GZ616 25-G6W	30	1,15	2681	1151	1530	144	146	132

6GZ616-2-60-en_b_td

6GZ616 SERIES, 14 TO 25 STAGES
ELECTROPUMPS OPERATING CHARACTERISTICS

6GZ616	~ 3500 [rpm]	ISO 9906:2012 - Grade 3B

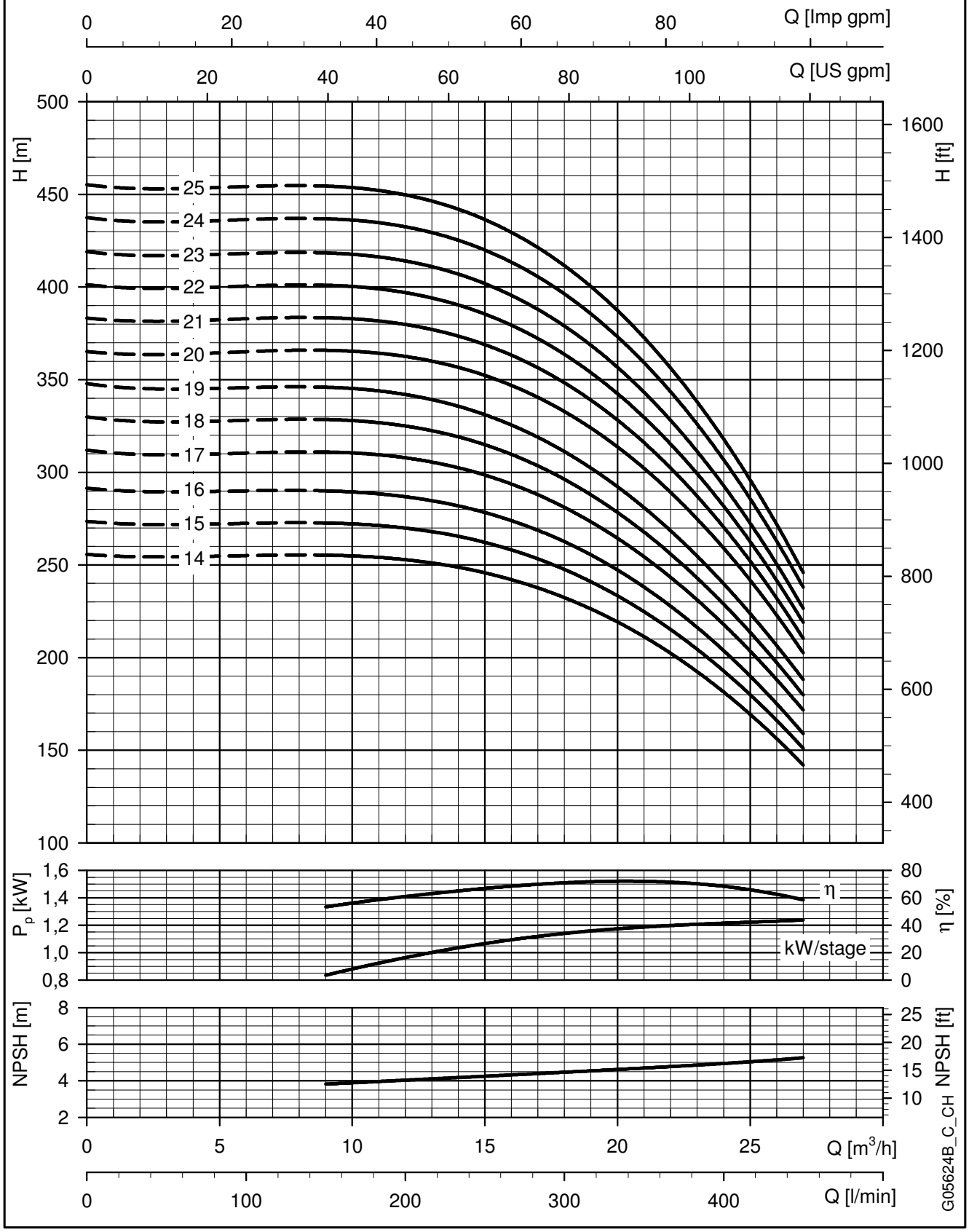

These performances are valid for liquids with density ρ = 1.0 Kg/dm³ and kinematic viscosity ν = 1 mm²/sec.

6GZ616 SERIES, 26 TO 39 STAGES
ELECTROPUMPS OPERATING CHARACTERISTICS

PUMP TYPE	RATED POWER		Q = DELIVERY					
			l/min 0	150	200	300	400	450
			m^3/h 0	9	12	18	24	27
	kW	S.F.	H = TOTAL HEAD METRES COLUMN OF WATER					
6GZ616 26D	30	1,15	473,2	471,8	466,7	426,6	329,0	254,1
6GZ616 27D	30	1,15	491,1	489,1	483,6	441,5	339,9	262,2
6GZ616 28D	37	1,15	510,2	509,8	504,6	462,1	357,7	277,4
6GZ616 29D	37	1,15	528,1	527,3	521,7	477,3	368,9	285,8
6GZ616 30D	37	1,15	546,0	544,8	538,8	492,2	380,0	294,9
6GZ616 31D	37	1,15	563,9	561,9	555,5	507,3	390,7	301,3
6GZ616 32D	37	1,15	581,7	579,2	572,4	522,2	401,7	309,8
6GZ616 33D	37	1,15	599,5	596,5	589,2	536,9	412,0	317,0
6GZ616 34D	37	1,15	617,4	613,6	605,9	551,4	422,3	324,4
6GZ616 35D	45	1,15	639,1	638,2	631,6	578,5	448,0	347,4
6GZ616 36D	45	1,15	657,0	655,7	648,8	593,8	459,4	356,0
6GZ616 37D	45	1,15	675,3	673,0	665,7	608,8	470,2	363,5
6GZ616 38D	45	1,15	693,1	690,5	682,7	623,9	481,4	371,6
6GZ616 39D	45	1,15	710,9	707,9	699,7	638,7	492,1	380,2

6GZ616-3-60-en_a_th

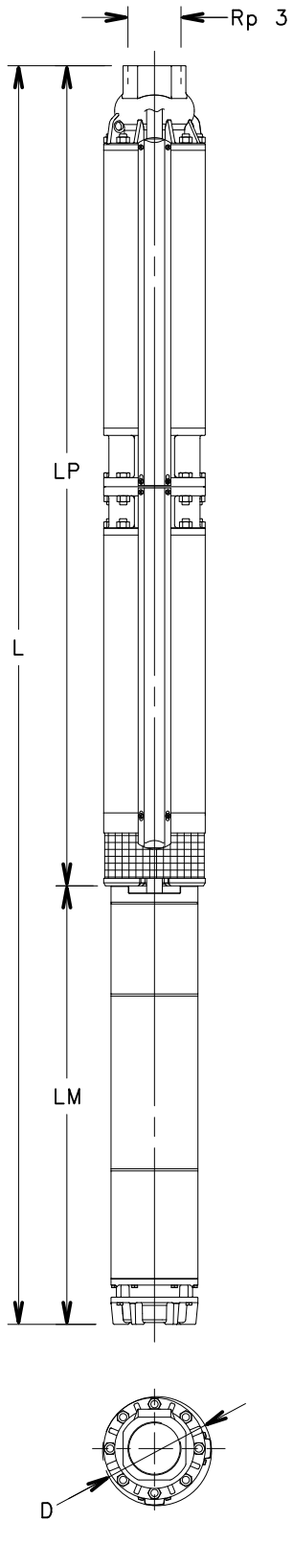

ELECTROPUMPS DIMENSIONS AND WEIGHTS

ELECTRIC PUMP TYPE	RATED POWER		DIMENSIONS (mm)					WEIGHT
	kW	S.F.	L	LM	LP	ø D		
						1 Cable	2 Cables	Kg
6GZ616 26D-G6W	30	1,15	2861	1151	1710	177	180	164
6GZ616 27D-G6W	30	1,15	2861	1151	1710	177	180	165
6GZ616 28D-G6W	37	1,15	3011	1301	1710	177	180	179
6GZ616 29D-G6W	37	1,15	3149	1301	1848	177	180	184
6GZ616 30D-G6W	37	1,15	3149	1301	1848	177	180	185
6GZ616 31D-G6W	37	1,15	3809	1301	2508	177	180	207
6GZ616 32D-G6W	37	1,15	3809	1301	2508	177	180	208
6GZ616 33D-G6W	37	1,15	3809	1301	2508	177	180	208
6GZ616 34D-G6W	37	1,15	3809	1301	2508	177	180	209
6GZ616 35D-G8W	45	1,15	3752	1195	2557	193	195	284
6GZ616 36D-G8W	45	1,15	3752	1195	2557	193	195	285
6GZ616 37D-G8W	45	1,15	3752	1195	2557	193	195	285
6GZ616 38D-G8W	45	1,15	3752	1195	2557	193	195	286
6GZ616 39D-G8W	45	1,15	4166	1195	2971	193	195	296

6GZ616-3-60-en_b_td

GOULDS WATER TECHNOLOGY
a xylem brand

6GZ616 SERIES, 26 TO 39 STAGES
ELECTROPUMPS OPERATING CHARACTERISTICS

6GZ616	~ 3500 [rpm]	ISO 9906:2012 - Grade 3B

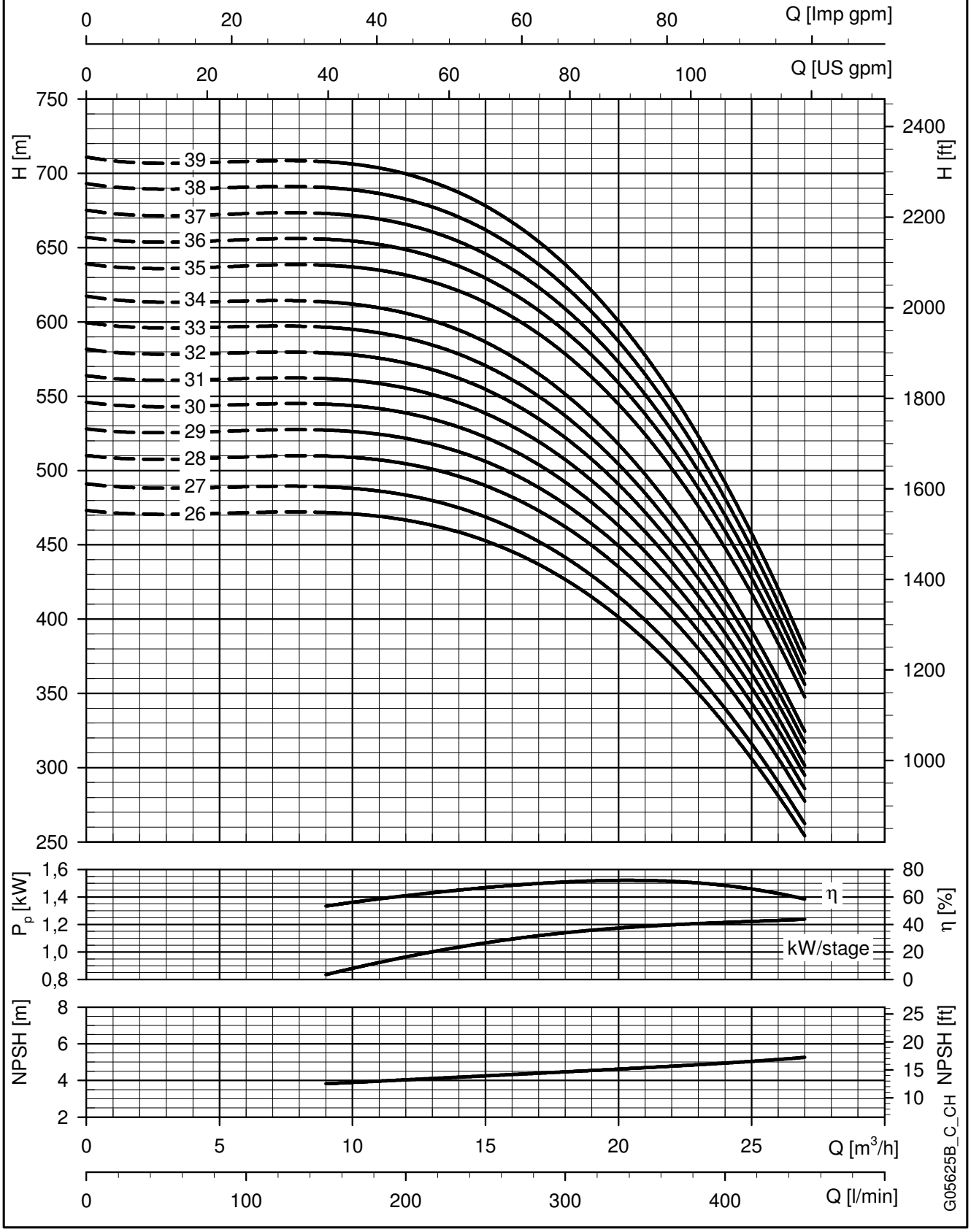

These performances are valid for liquids with density ρ = 1.0 Kg/dm³ and kinematic viscosity ν = 1 mm²/sec.

6GZ622 SERIES, 1 TO 12 STAGES
ELECTROPUMPS OPERATING CHARACTERISTICS

PUMP TYPE	RATED POWER		Q = DELIVERY					
			l/min 0	200	300	400	500	600
			m^3/h 0	12	18	24	30	36
	kW	S.F.	H = TOTAL HEAD METRES COLUMN OF WATER					
6GZ622 01	1,5	1,25	19,9	18,7	17,6	15,8	12,9	8,7
6GZ622 02	4	1,15	40,6	38,7	36,8	34,0	29,1	20,1
6GZ622 03	5,5	1,15	60,7	57,9	54,9	50,7	43,4	29,8
6GZ622 04	7,5	1,15	80,1	77,3	73,5	67,5	57,4	40,2
6GZ622 05	9,3	1,15	100,8	96,5	91,9	84,4	71,8	50,5
6GZ622 06	9,3	1,15	120,1	114,7	108,9	99,6	84,2	58,3
6GZ622 07	11	1,15	140,2	134,2	127,4	116,6	98,7	69,0
6GZ622 08	13	1,15	159,6	152,8	144,7	132,7	112,5	76,2
6GZ622 09	15	1,15	180,4	172,8	164,2	150,0	126,7	89,4
6GZ622 10	15	1,15	202,0	192,5	182,6	166,7	140,7	99,0
6GZ622 11	18,5	1,15	223,0	212,9	202,3	185,2	156,9	111,3
6GZ622 12	18,5	1,15	242,5	231,2	219,4	200,4	169,3	119,3

6GZ622-1-60-en_b_th

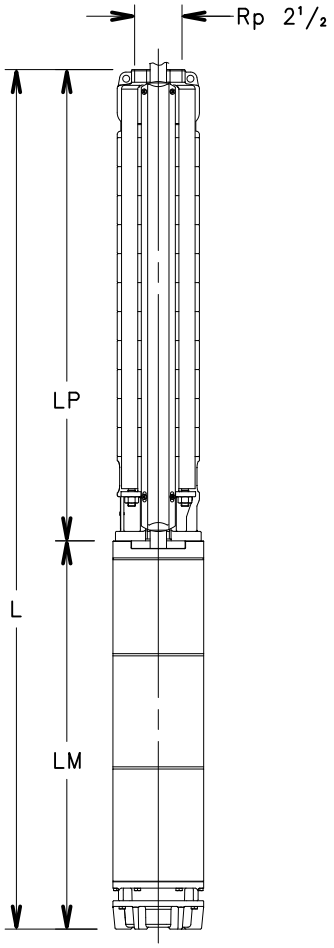

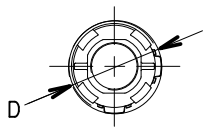

05600_A_DD

ELECTROPUMPS DIMENSIONS AND WEIGHTS

ELECTRIC PUMP TYPE	RATED POWER		DIMENSIONS (mm)					WEIGHT
	kW	S.F.	L	LM	LP	ø D		
						1 Cable	2 Cables	Kg
6GZ622 01-G4C	1,5	1,25	748	391	357	142	144	23
6GZ622 02-G4C	4	1,15	1040	614	426	142	144	34
6GZ622 03-G4C	5,5	1,15	1179	684	495	142	144	39
6GZ622 04-G4C	7,5	1,15	1328	764	564	142	144	44
6GZ622 02-G6W	4	1,15	1009	583	426	144	146	48
6GZ622 03-G6W	5,5	1,15	1108	613	495	144	146	54
6GZ622 04-G6W	7,5	1,15	1217	653	564	144	146	60
6GZ622 05-G6W	9,3	1,15	1316	683	633	144	146	65
6GZ622 06-G6W	9,3	1,15	1385	683	702	144	146	67
6GZ622 07-G6W	11	1,15	1494	723	771	144	146	72
6GZ622 08-G6W	13	1,15	1603	763	840	144	146	78
6GZ622 09-G6W	15	1,15	1742	833	909	144	146	87
6GZ622 10-G6W	15	1,15	1811	833	978	144	146	89
6GZ622 11-G6W	18,5	1,15	1950	903	1047	144	146	98
6GZ622 12-G6W	18,5	1,15	2019	903	1116	144	146	100

6GZ622-1-60-en_b_td

GOULDS WATER TECHNOLOGY
a xylem brand

6GZ622 SERIES, 1 TO 12 STAGES
ELECTROPUMPS OPERATING CHARACTERISTICS

6GZ622	~ 3500 [rpm]	ISO 9906:2012 - Grade 3B

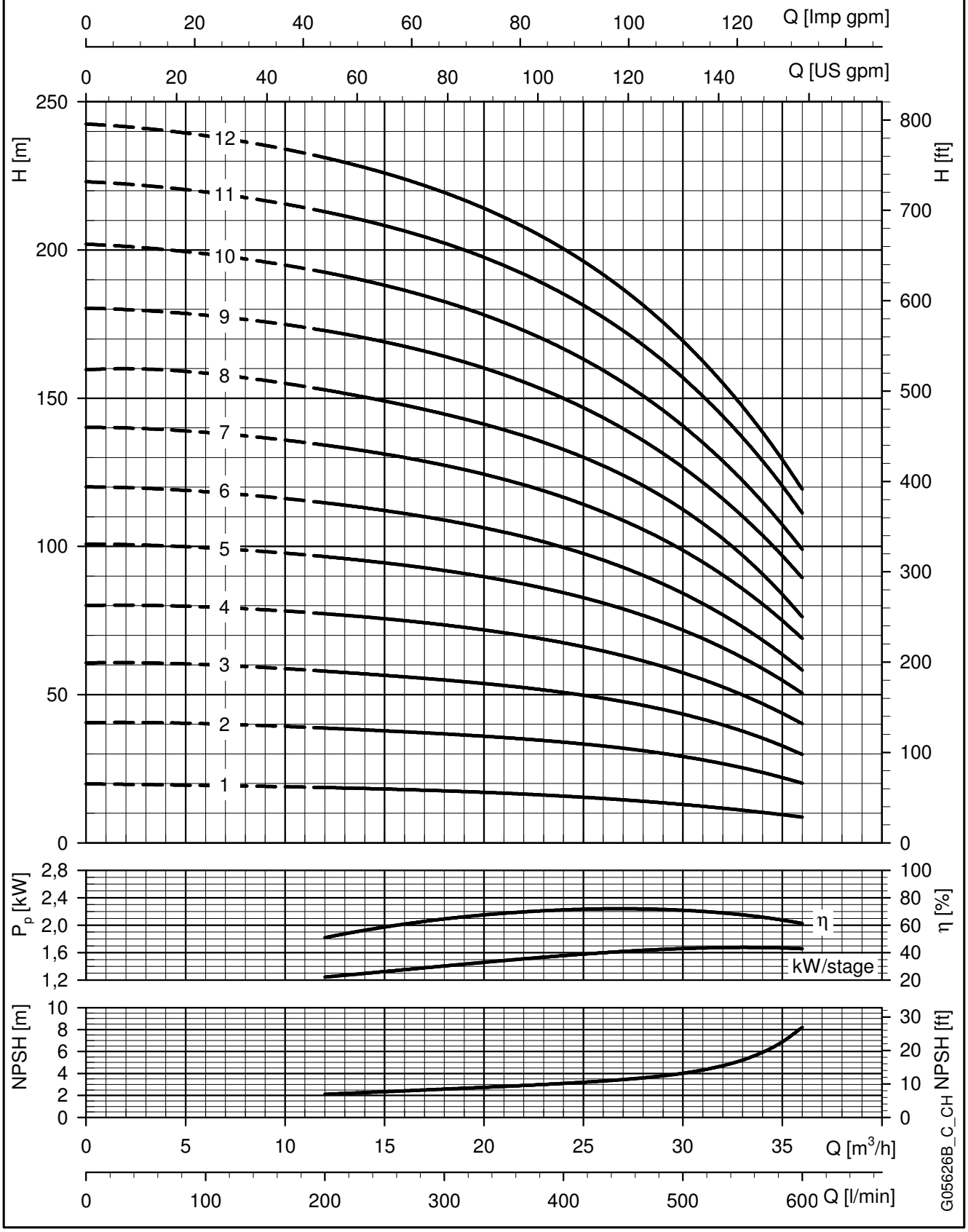

These performances are valid for liquids with density ρ = 1.0 Kg/dm³ and kinematic viscosity ν = 1 mm²/sec.

6GZ622 SERIES, 13 TO 23 STAGES ELECTROPUMPS OPERATING CHARACTERISTICS

PUMP TYPE	RATED POWER		Q = DELIVERY l/min 0	200	300	400	500	600
			m^3/h 0	12	18	24	30	36
	kW	S.F.	H = TOTAL HEAD METRES COLUMN OF WATER					
6GZ622 13	22	1,15	261,9	251,4	238,8	218,4	185,5	133,4
6GZ622 14	22	1,15	281,2	269,7	255,9	233,6	197,9	141,7
6GZ622 15	26	1,15	304,7	292,6	279,2	256,5	218,5	157,7
6GZ622 16	26	1,15	324,3	311,2	296,7	272,2	231,6	166,5
6GZ622 17	26	1,15	344,0	329,7	314,1	287,8	244,4	175,0
6GZ622 18	30	1,15	366,4	349,7	334,0	306,3	259,7	186,8
6GZ622 19	30	1,15	385,9	368,1	351,4	321,8	272,4	195,2
6GZ622 20	37	1,15	403,4	388,0	370,5	339,5	287,9	207,6
6GZ622 21	37	1,15	422,8	406,5	387,9	355,1	300,8	216,2
6GZ622 22	37	1,15	442,2	424,7	405,1	370,4	313,1	224,3
6GZ622 23	37	1,15	461,5	443,0	422,2	385,6	325,6	232,6

6GZ622-2-60-en_b_th

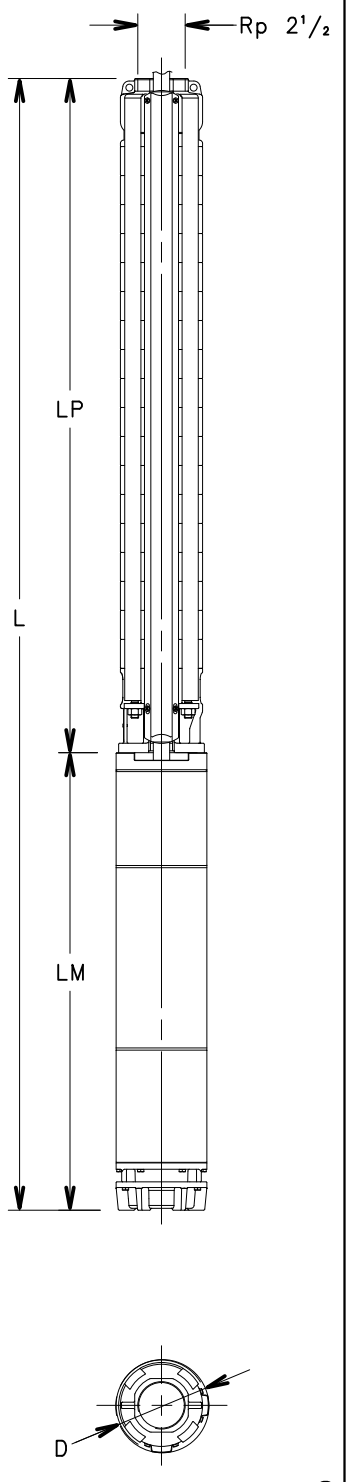

ELECTROPUMPS DIMENSIONS AND WEIGHTS

ELECTRIC PUMP TYPE	RATED POWER		DIMENSIONS (mm)					WEIGHT
	kW	S.F.	L	LM	LP	ø D		
						1 Cable	2 Cables	Kg
6GZ622 13-G6W	22	1,15	2128	943	1185	144	146	104
6GZ622 14-G6W	22	1,15	2197	943	1254	144	146	106
6GZ622 15-G6W	26	1,15	2394	1071	1323	144	146	117
6GZ622 16-G6W	26	1,15	2463	1071	1392	144	146	118
6GZ622 17-G6W	26	1,15	2532	1071	1461	144	146	120
6GZ622 18-G6W	30	1,15	2681	1151	1530	144	146	129
6GZ622 19-G6W	30	1,15	2750	1151	1599	144	146	131
6GZ622 20-G6W	37	1,15	2969	1301	1668	144	146	147
6GZ622 21-G6W	37	1,15	3038	1301	1737	144	146	148
6GZ622 22-G6W	37	1,15	3107	1301	1806	144	146	150
6GZ622 23-G6W	37	1,15	3176	1301	1875	144	146	151

6GZ622-2-60-en_b_td

GOULDS WATER TECHNOLOGY
a xylem brand

6GZ622 SERIES, 13 TO 23 STAGES
ELECTROPUMPS OPERATING CHARACTERISTICS

6GZ622	~ 3500 [rpm]	ISO 9906:2012 - Grade 3B

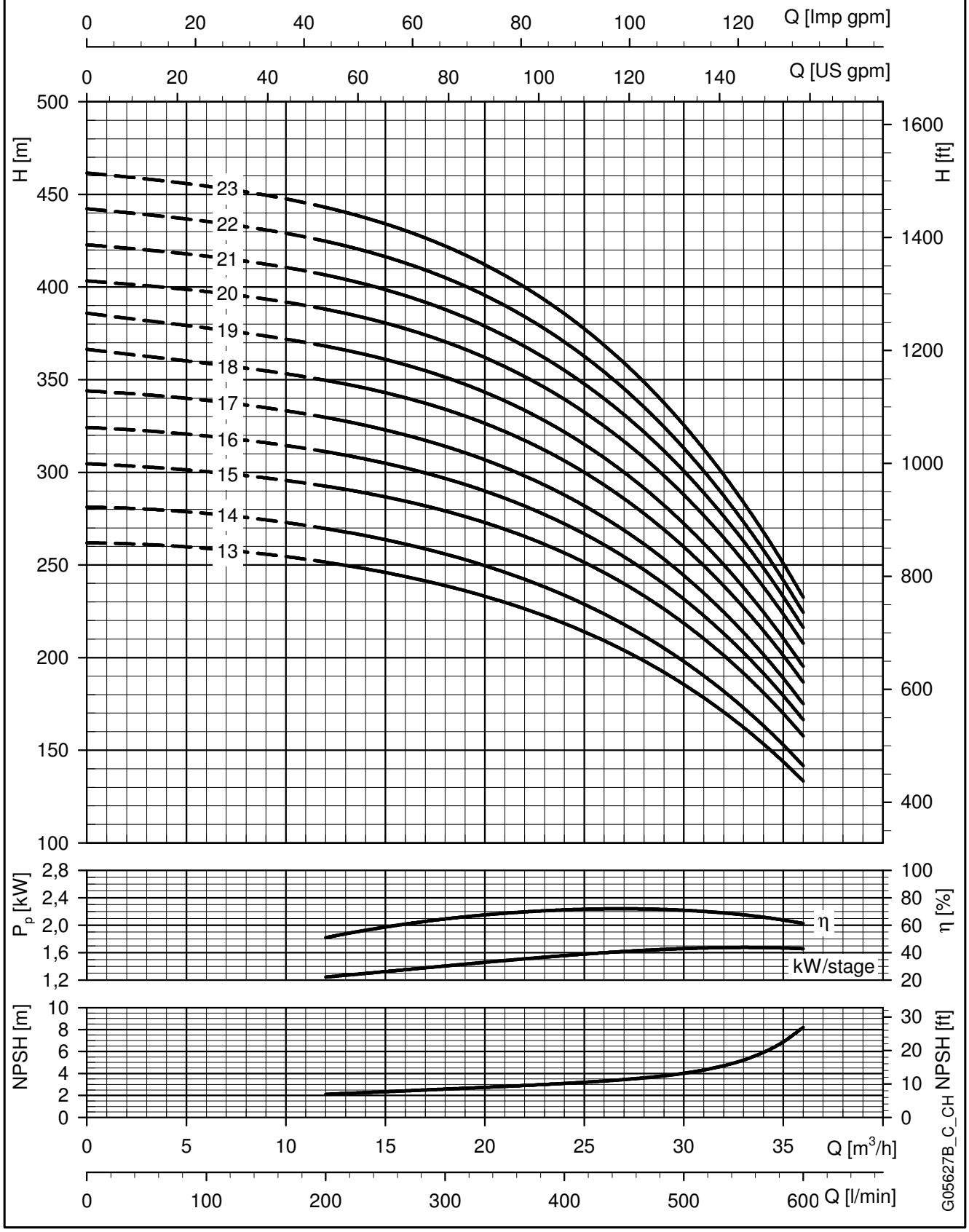

These performances are valid for liquids with density ρ = 1.0 Kg/dm³ and kinematic viscosity ν = 1 mm²/sec.

6GZ622 SERIES, 24 TO 34 STAGES
ELECTROPUMPS OPERATING CHARACTERISTICS

PUMP TYPE	RATED POWER		Q = DELIVERY					
			l/min 0	200	300	400	500	600
			m^3/h 0	12	18	24	30	36
	kW	S.F.	H = TOTAL HEAD METRES COLUMN OF WATER					
6GZ622 24D	37	1,15	480,8	461,1	439,1	400,7	337,7	240,5
6GZ622 25D	45	1,15	505,1	485,7	463,7	424,9	360,6	260,3
6GZ622 26D	45	1,15	524,7	504,2	481,2	440,6	373,4	268,8
6GZ622 27D	45	1,15	544,0	522,6	498,4	455,9	385,9	277,3
6GZ622 28D	45	1,15	563,5	540,9	515,6	471,4	398,5	285,6
6GZ622 29D	45	1,15	582,6	559,1	532,7	486,6	410,8	293,7
6GZ622 30D	52	1,15	604,4	580,9	554,4	507,7	430,4	309,8
6GZ622 31D	52	1,15	623,8	599,4	571,9	523,4	443,2	318,3
6GZ622 32D	52	1,15	643,2	617,7	589,1	538,9	455,8	326,7
6GZ622 33D	52	1,15	662,6	635,8	606,2	554,1	468,3	335,1
6GZ622 34D	52	1,15	681,5	654,1	623,2	569,4	480,7	343,3

6GZ622-3-60-en_b_th

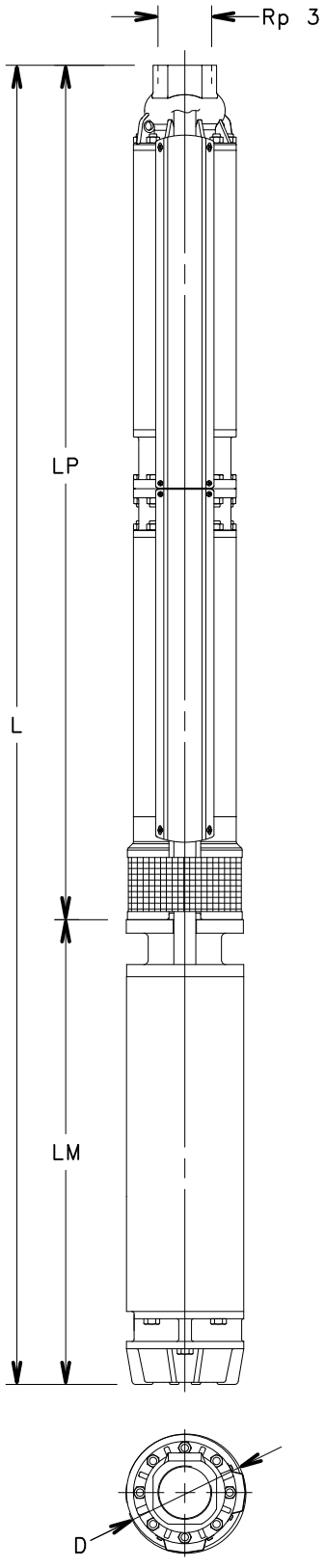

ELECTROPUMPS DIMENSIONS AND WEIGHTS

ELECTRIC PUMP TYPE	RATED POWER		DIMENSIONS (mm)					WEIGHT
	kW	S.F.	L	LM	LP	ø D		
						1 Cable	2 Cables	Kg
6GZ622 24D-G6W	37	1,15	3356	1301	2055	177	180	189
6GZ622 25D-G8W	45	1,15	3299	1195	2104	193	195	264
6GZ622 26D-G8W	45	1,15	3752	1195	2557	193	195	280
6GZ622 27D-G8W	45	1,15	3752	1195	2557	193	195	281
6GZ622 28D-G8W	45	1,15	3752	1195	2557	193	195	281
6GZ622 29D-G8W	45	1,15	4166	1195	2971	193	195	292
6GZ622 30D-G8W	52	1,15	4256	1285	2971	193	195	312
6GZ622 31D-G8W	52	1,15	4256	1285	2971	193	195	313
6GZ622 32D-G8W	52	1,15	4256	1285	2971	193	195	314
6GZ622 33D-G8W	52	1,15	4256	1285	2971	193	195	315
6GZ622 34D-G8W	52	1,15	4256	1285	2971	193	195	315

6GZ622-3-60-en_b_td

GOULDS WATER TECHNOLOGY
a xylem brand

6GZ622 SERIES, 24 TO 34 STAGES
ELECTROPUMPS OPERATING CHARACTERISTICS

6GZ622	~ 3500 [rpm]	ISO 9906:2012 - Grade 3B

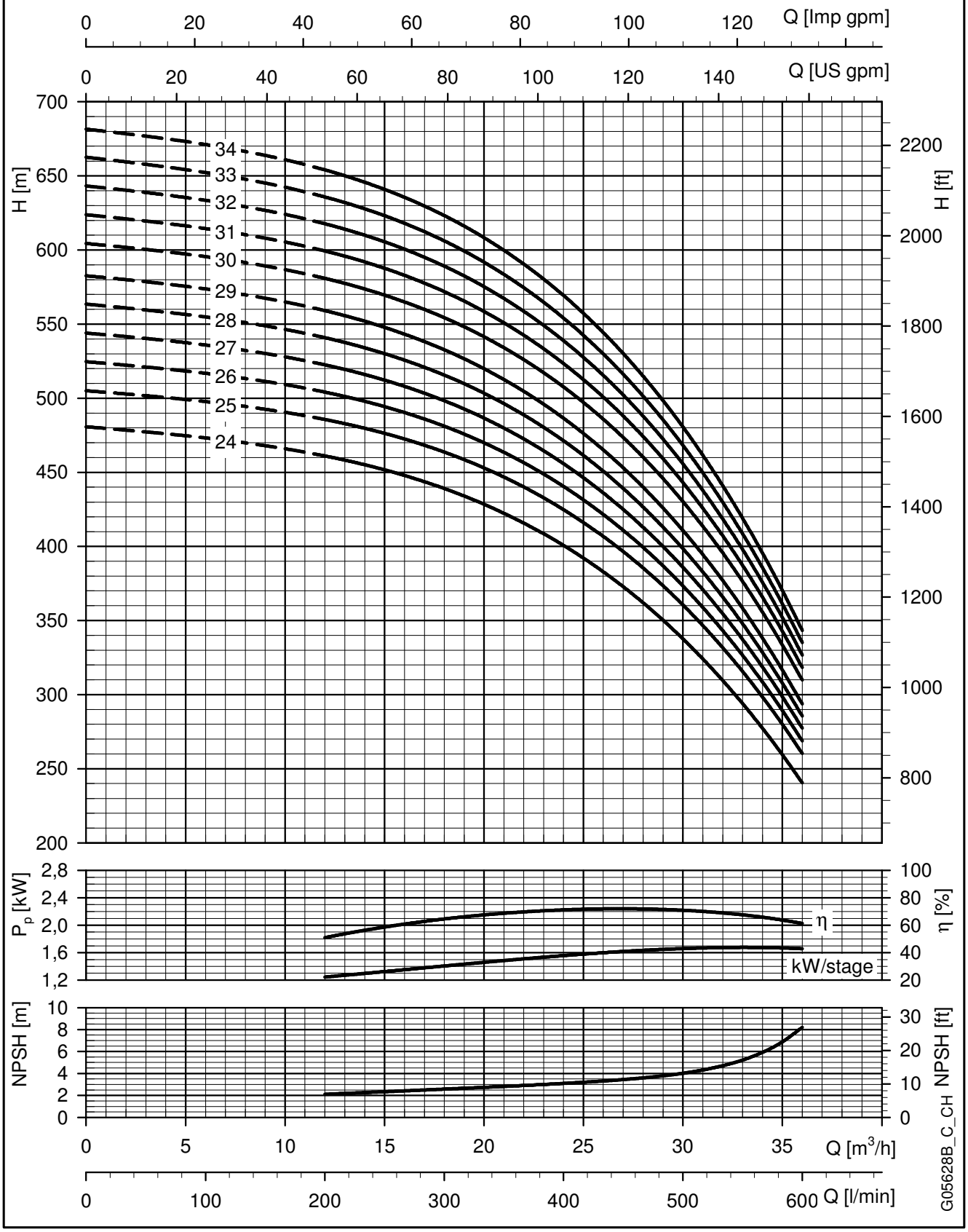

These performances are valid for liquids with density ρ = 1.0 Kg/dm³ and kinematic viscosity ν = 1 mm²/sec.

6GZ631 SERIES, 1 TO 19 STAGES
ELECTROPUMPS OPERATING CHARACTERISTICS

PUMP TYPE	RATED POWER		Q = DELIVERY					
			l/min 0	250	400	500	650	800
			m^3/h 0	15	24	30	39	48
	kW	S.F.	H = TOTAL HEAD METRES COLUMN OF WATER					
6GZ631 01	2,2	1,15	22,0	20,7	18,7	17,2	14,2	9,9
6GZ631 02	4	1,15	44,9	42,5	38,7	35,6	29,8	21,4
6GZ631 03	7,5	1,15	67,7	63,8	58,5	54,2	45,9	33,5
6GZ631 04	9,3	1,15	90,4	85,1	77,9	72,2	61,5	45,1
6GZ631 05	11	1,15	112,1	106,2	97,1	90,0	76,3	55,5
6GZ631 06	13	1,15	133,7	127,3	116,7	108,0	91,1	65,4
6GZ631 07	15	1,15	156,1	148,8	136,7	126,6	106,9	76,8
6GZ631 08	18,5	1,15	177,7	170,1	156,3	144,9	122,6	88,4
6GZ631 09	18,5	1,15	199,1	190,2	174,5	161,4	136,1	97,4
6GZ631 10	22	1,15	223,1	213,1	195,2	180,6	152,7	110,6
6GZ631 11	22	1,15	244,5	233,4	213,4	197,2	166,2	119,5
6GZ631 12	26	1,15	267,9	258,1	238,5	221,6	188,5	139,8
6GZ631 13	26	1,15	289,6	278,7	257,1	238,5	202,5	149,5
6GZ631 14	30	1,15	312,6	300,4	276,8	257,2	218,9	160,3
6GZ631 15	30	1,15	334,3	320,8	295,3	274,0	232,8	169,6
6GZ631 16	37	1,15	357,4	342,8	316,1	293,7	249,3	180,7
6GZ631 17	37	1,15	378,9	363,1	334,5	310,5	263,1	190,0
6GZ631 18	37	1,15	400,5	383,3	352,8	327,2	276,7	198,9
6GZ631 19	37	1,15	421,8	403,4	370,8	343,6	289,9	207,6

6GZ631-1-60-en_a_th

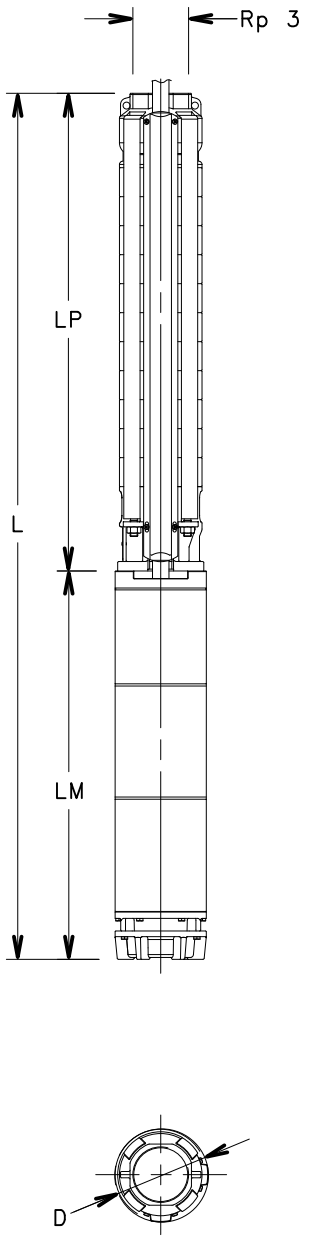

ELECTROPUMPS DIMENSIONS AND WEIGHTS

ELECTRIC PUMP TYPE	RATED POWER		DIMENSIONS (mm)					WEIGHT
	kW	S.F.	L	LM	LP	ø D		
						1 Cable	2 Cables	Kg
6GZ631 01-G4C	2,2	1,15	778	411	367	142	144	24
6GZ631 02-G4C	4	1,15	1050	614	436	142	144	34
6GZ631 03-G4C	7,5	1,15	1269	764	505	142	144	42
6GZ631 02-G6W	4	1,15	1019	583	436	144	146	48
6GZ631 03-G6W	7,5	1,15	1158	653	505	144	146	58
6GZ631 04-G6W	9,3	1,15	1257	683	574	144	146	64
6GZ631 05-G6W	11	1,15	1366	723	643	144	146	69
6GZ631 06-G6W	13	1,15	1475	763	712	144	146	75
6GZ631 07-G6W	15	1,15	1614	833	781	144	146	84
6GZ631 08-G6W	18,5	1,15	1753	903	850	144	146	94
6GZ631 09-G6W	18,5	1,15	1822	903	919	144	146	95
6GZ631 10-G6W	22	1,15	1931	943	988	144	146	100
6GZ631 11-G6W	22	1,15	2000	943	1057	144	146	101
6GZ631 12-G6W	26	1,15	2197	1071	1126	144	146	112
6GZ631 13-G6W	26	1,15	2266	1071	1195	144	146	113
6GZ631 14-G6W	30	1,15	2415	1151	1264	144	146	123
6GZ631 15-G6W	30	1,15	2484	1151	1333	144	146	125
6GZ631 16-G6W	37	1,15	2703	1301	1402	144	146	140
6GZ631 17-G6W	37	1,15	2772	1301	1471	144	146	142
6GZ631 18-G6W	37	1,15	2841	1301	1540	144	146	143
6GZ631 19-G6W	37	1,15	2910	1301	1609	144	146	145

6GZ631-1-60-en_b_td

6GZ631 SERIES, 1 TO 19 STAGES
ELECTROPUMPS OPERATING CHARACTERISTICS

6GZ631	~ 3500 [rpm]	ISO 9906:2012 - Grade 3B

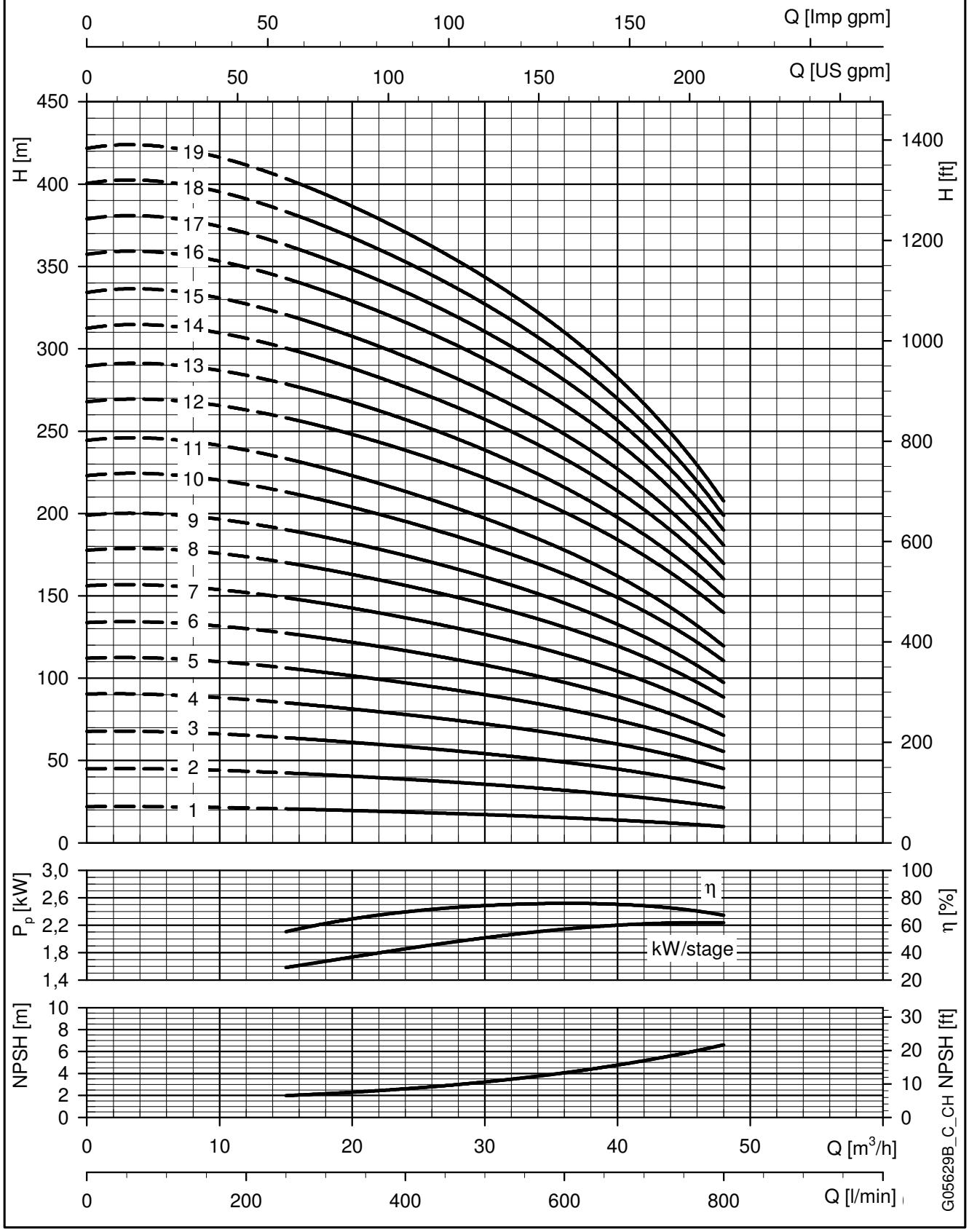

These performances are valid for liquids with density ρ = 1.0 Kg/dm^3 and kinematic viscosity ν = 1 mm^2/sec.

6GZ631 SERIES, 20 TO 28 STAGES
ELECTROPUMPS OPERATING CHARACTERISTICS

PUMP TYPE	RATED POWER		Q = DELIVERY					
			l/min 0	250	400	500	650	800
			m^3/h 0	15	24	30	39	48
	kW	S.F.	H = TOTAL HEAD METRES COLUMN OF WATER					
6GZ631 20D	45	1,15	447,6	429,2	395,8	367,7	312,2	226,5
6GZ631 21D	45	1,15	469,2	449,5	414,3	384,6	326,0	235,8
6GZ631 22D	45	1,15	490,9	469,6	432,5	401,3	339,7	244,9
6GZ631 23D	45	1,15	512,4	489,8	450,6	417,8	353,2	253,8
6GZ631 24D	52	1,15	535,5	513,1	473,1	439,4	372,7	269,7
6GZ631 25D	52	1,15	557,0	533,5	491,5	456,2	386,5	278,9
6GZ631 26D	52	1,15	578,6	553,7	509,8	472,9	400,3	288,1
6GZ631 27D	55	1,15	602,1	577,3	531,9	493,6	418,2	302,2
6GZ631 28D	55	1,15	623,8	597,5	550,3	510,4	431,8	311,1

6GZ631-2-60-en_a_th

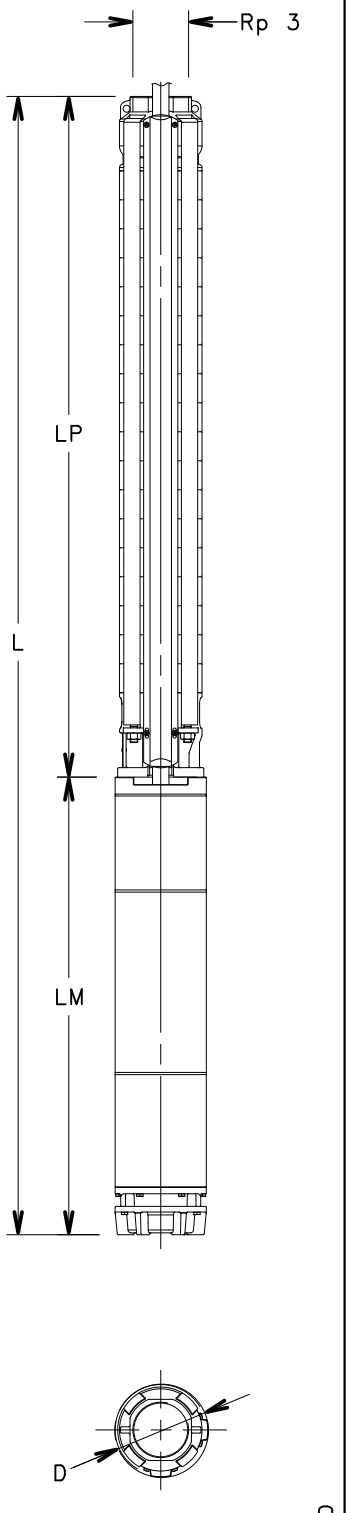

ELECTROPUMPS DIMENSIONS AND WEIGHTS

ELECTRIC PUMP TYPE	RATED POWER		DIMENSIONS (mm)					WEIGHT
	kW	S.F.	L	LM	LP	ø D		
						1 Cable	2 Cables	Kg
6GZ631 20D-G8W	45	1,15	2954	1195	1759	193	195	250
6GZ631 21D-G8W	45	1,15	3092	1195	1897	193	195	255
6GZ631 22D-G8W	45	1,15	3092	1195	1897	193	195	256
6GZ631 23D-G8W	45	1,15	3299	1195	2104	193	195	262
6GZ631 24D-G8W	52	1,15	3389	1285	2104	193	195	283
6GZ631 25D-G8W	52	1,15	3389	1285	2104	193	195	284
6GZ631 26D-G8W	52	1,15	3842	1285	2557	193	195	300
6GZ631 27D-G8W	55	1,15	3882	1325	2557	193	195	307
6GZ631 28D-G8W	55	1,15	3882	1325	2557	193	195	307

6GZ631-2-60-en_a_td

6GZ631 SERIES, 20 TO 28 STAGES
ELECTROPUMPS OPERATING CHARACTERISTICS

6GZ631	~ 3500 [rpm]	ISO 9906:2012 - Grade 3B

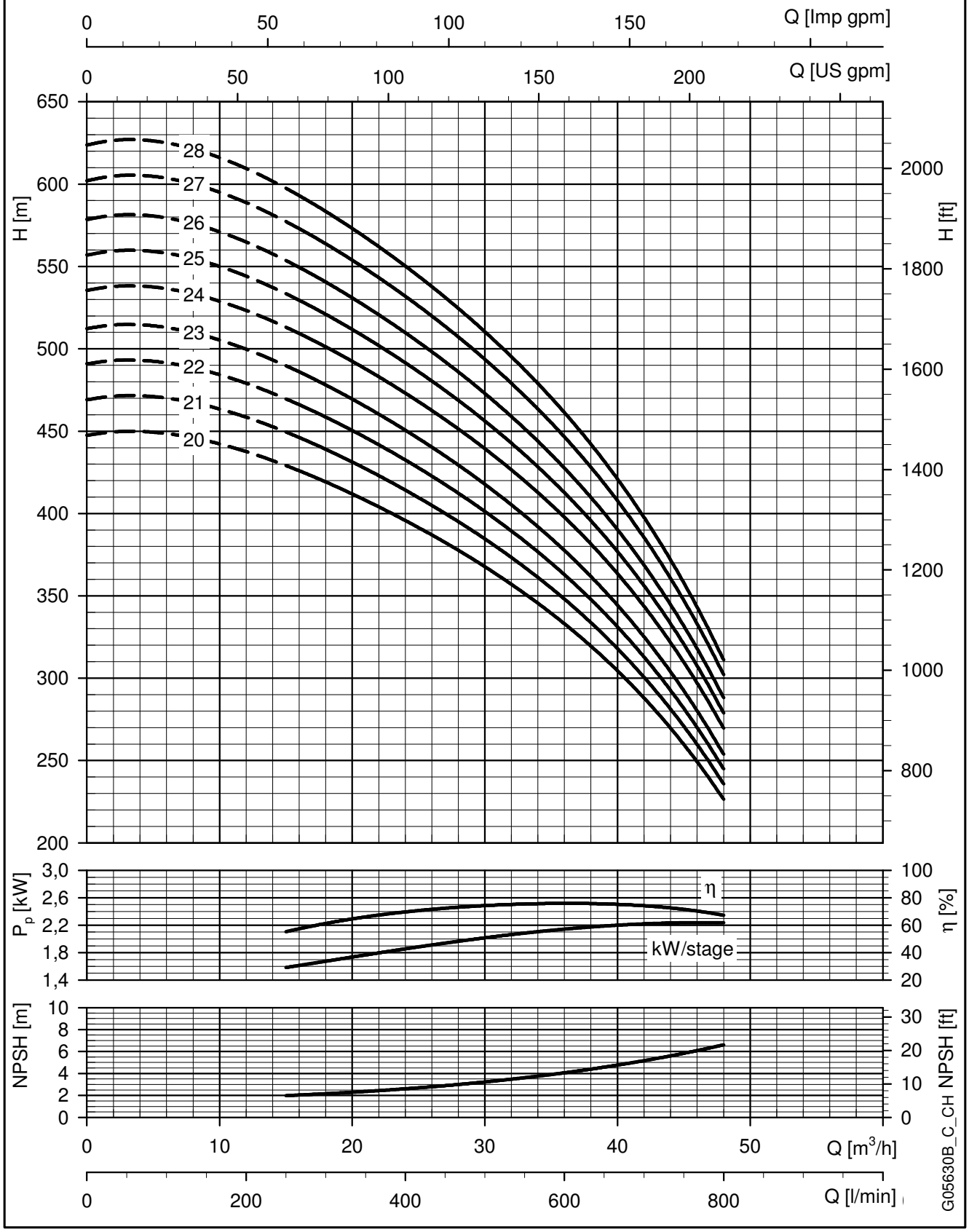

These performances are valid for liquids with density ρ = 1.0 Kg/dm^3 and kinematic viscosity ν = 1 mm^2/sec.

6GZ646 SERIES, 1 TO 16 STAGES
ELECTROPUMPS OPERATING CHARACTERISTICS

PUMP TYPE	RATED POWER		Q = DELIVERY					
			l/min 0	500	600	800	1000	1200
			m^3/h 0	30	36	48	60	72
	kW	S.F.	H = TOTAL HEAD METRES COLUMN OF WATER					
6GZ646 01	2,2	1,15	23,2	15,5	14,1	11,4	8,3	3,0
6GZ646 02	5,5	1,15	50,6	33,9	31,1	26,3	20,9	11,6
6GZ646 03	7,5	1,15	74,1	50,2	46,2	39,3	31,5	17,8
6GZ646 04	9,3	1,15	97,8	66,5	61,3	52,3	42,1	24,1
6GZ646 05	11	1,15	120,4	82,5	76,0	64,9	52,4	29,9
6GZ646 06	15	1,15	148,4	100,9	93,0	79,7	64,9	38,5
6GZ646 07	18,5	1,15	174,1	118,3	109,1	93,7	76,5	46,0
6GZ646 08	18,5	1,15	195,5	133,5	123,2	105,7	86,1	51,0
6GZ646 09	22	1,15	223,1	152,3	140,7	120,9	99,1	60,2
6GZ646 10	26	1,15	252,7	171,8	158,7	136,6	112,5	69,9
6GZ646 11	26	1,15	274,9	187,5	173,2	149,1	122,6	75,6
6GZ646 12	30	1,15	299,9	204,4	188,8	162,6	133,7	82,4
6GZ646 13	30	1,15	321,7	219,8	203,1	174,9	143,6	87,7
6GZ646 14	37	1,15	349,5	238,4	220,2	189,7	156,1	96,4
6GZ646 15	37	1,15	371,1	253,7	234,5	202,0	165,9	101,8
6GZ646 16	37	1,15	388,3	267,8	247,5	213,0	174,6	105,7

6GZ646-1-60-en_a_th

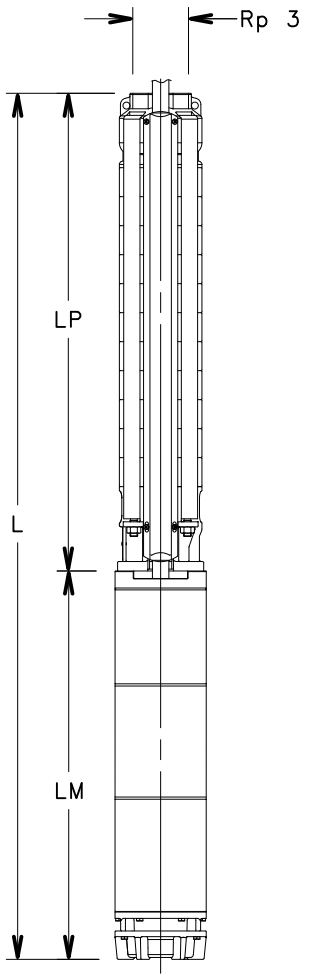

05604_A_DD

ELECTROPUMPS DIMENSIONS AND WEIGHTS

ELECTRIC PUMP TYPE	RATED POWER		DIMENSIONS (mm)					WEIGHT
	kW	S.F.	L	LM	LP	ø D		
						1 Cable	2 Cables	Kg
6GZ646 01-G4C	2,2	1,15	824	411	413	142	144	25
6GZ646 02-G4C	5,5	1,15	1212	684	528	142	144	39
6GZ646 03-G4C	7,5	1,15	1407	764	643	142	144	45
6GZ646 02-G6W	5,5	1,15	1141	613	528	144	146	54
6GZ646 03-G6W	7,5	1,15	1296	653	643	144	146	61
6GZ646 04-G6W	9,3	1,15	1441	683	758	144	146	67
6GZ646 05-G6W	11	1,15	1596	723	873	144	146	74
6GZ646 06-G6W	15	1,15	1821	833	988	144	146	88
6GZ646 07-G6W	18,5	1,15	2006	903	1103	144	146	99
6GZ646 08-G6W	18,5	1,15	2121	903	1218	144	146	101
6GZ646 09-G6W	22	1,15	2276	943	1333	144	146	107
6GZ646 10-G6W	26	1,15	2519	1071	1448	144	146	118
6GZ646 11-G6W	26	1,15	2634	1071	1563	144	146	121
6GZ646 12-G6W	30	1,15	2829	1151	1678	144	146	131
6GZ646 13-G6W	30	1,15	2944	1151	1793	144	146	134
6GZ646 14-G6W	37	1,15	3209	1301	1908	144	146	150
6GZ646 15-G6W	37	1,15	3324	1301	2023	144	146	153
6GZ646 16-G6W	37	1,15	3439	1301	2138	144	146	155

6GZ646-1-60-en_b_td

GOULDS WATER TECHNOLOGY
a xylem brand

6GZ646 SERIES, 1 TO 16 STAGES
ELECTROPUMPS OPERATING CHARACTERISTICS

6GZ646	~ 3500 [rpm]	ISO 9906:2012 - Grade 3B

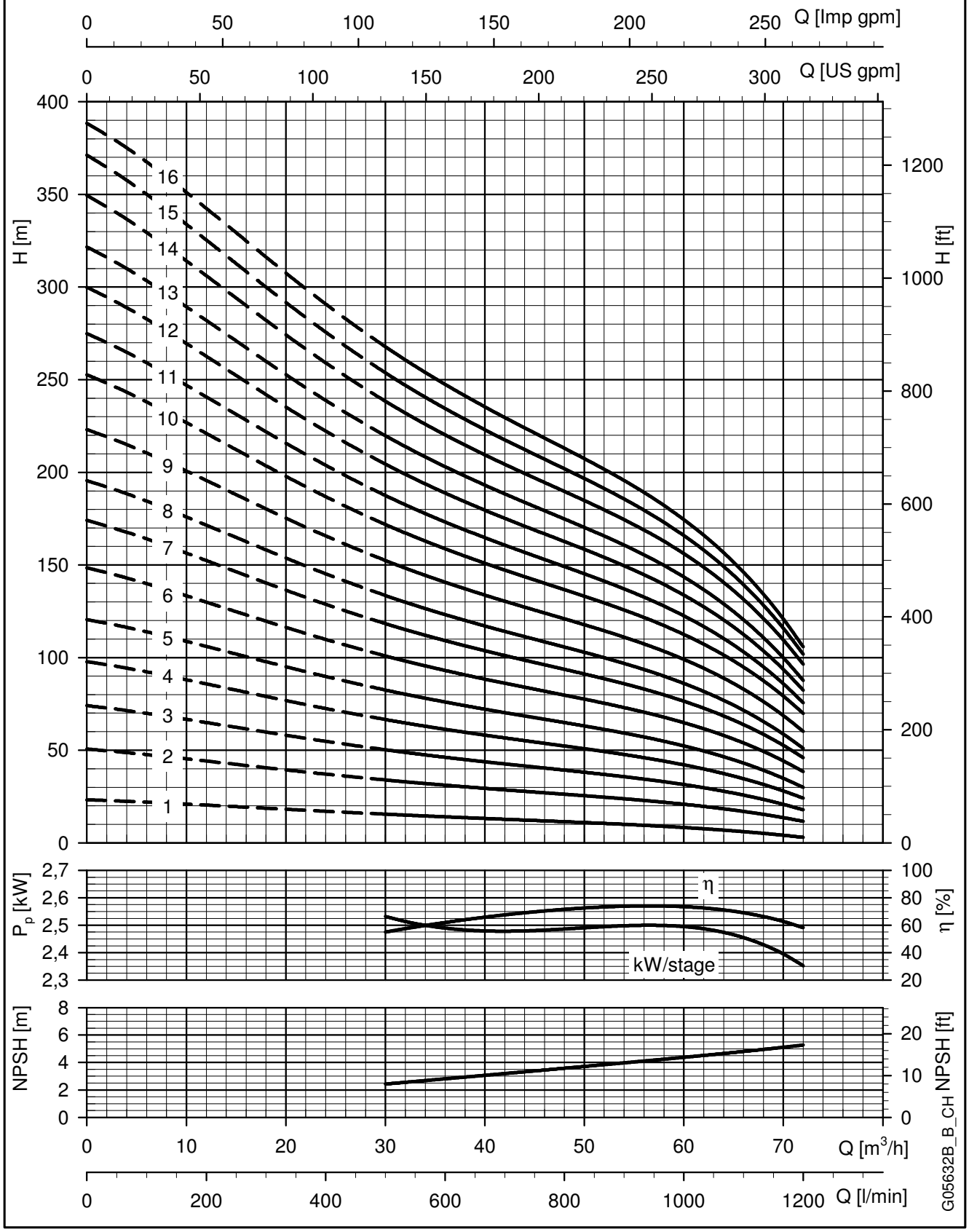

These performances are valid for liquids with density ρ = 1.0 Kg/dm^3 and kinematic viscosity ν = 1 mm^2/sec.

6GZ646 SERIES, 17 TO 24 STAGES
ELECTROPUMPS OPERATING CHARACTERISTICS

PUMP TYPE	RATED POWER		Q = DELIVERY					
			l/min 0	500	600	800	1000	1200
			m^3/h 0	30	36	48	60	72
	kW	S.F.	H = TOTAL HEAD METRES COLUMN OF WATER					
6GZ646 17D	45	1,15	427,0	290,8	268,7	231,7	191,1	119,1
6GZ646 18D	45	1,15	449,2	306,3	283,1	244,1	201,0	124,5
6GZ646 19D	45	1,15	471,2	321,6	297,3	256,2	210,8	129,7
6GZ646 20D	52	1,15	501,5	341,4	315,5	272,1	224,4	139,5
6GZ646 21D	52	1,15	523,6	356,8	329,8	284,5	234,4	144,8
6GZ646 22D	52	1,15	545,3	372,2	344,1	296,6	244,2	150,3
6GZ646 23D	52	1,15	567,1	387,5	358,2	308,8	253,8	155,3
6GZ646 24D	55	1,15	591,8	406,3	375,6	324,0	266,8	164,6

6GZ646-2-60-en_a_th

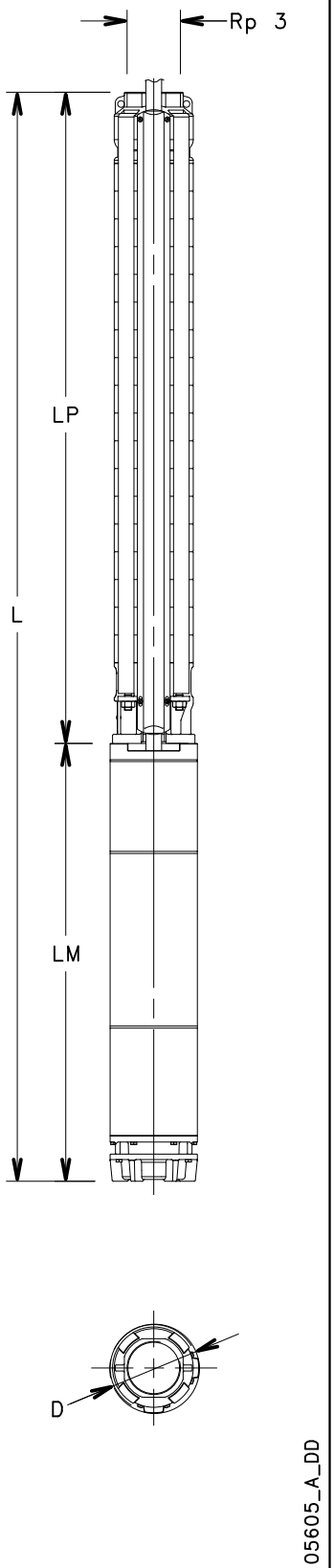

ELECTROPUMPS DIMENSION

ELECTRIC PUMP TYPE	RATED POWER		DIMENSIONS (mm)					WEIGHT
	kW	S.F.	L	LM	LP	ø D		
						1 Cable	2 Cables	Kg
6GZ646 17D-G8W	45	1,15	3759	1195	2564	193	195	278
6GZ646 18D-G8W	45	1,15	3759	1195	2564	193	195	279
6GZ646 19D-G8W	45	1,15	3759	1195	2564	193	195	281
6GZ646 20D-G8W	52	1,15	4672	1287	3385	193	195	325
6GZ646 21D-G8W	52	1,15	4672	1287	3385	193	195	326
6GZ646 22D-G8W	52	1,15	4672	1287	3385	193	195	328
6GZ646 23D-G8W	52	1,15	4672	1287	3385	193	195	329
6GZ646 24D-G8W	55	1,15	4710	1325	3385	193	195	336

6GZ646-2-60-en_b_td

GOULDS WATER TECHNOLOGY
a xylem brand

6GZ646 SERIES, 17 TO 24 STAGES
ELECTROPUMPS OPERATING CHARACTERISTICS

6GZ646	~ 3500 [rpm]	ISO 9906:2012 - Grade 3B

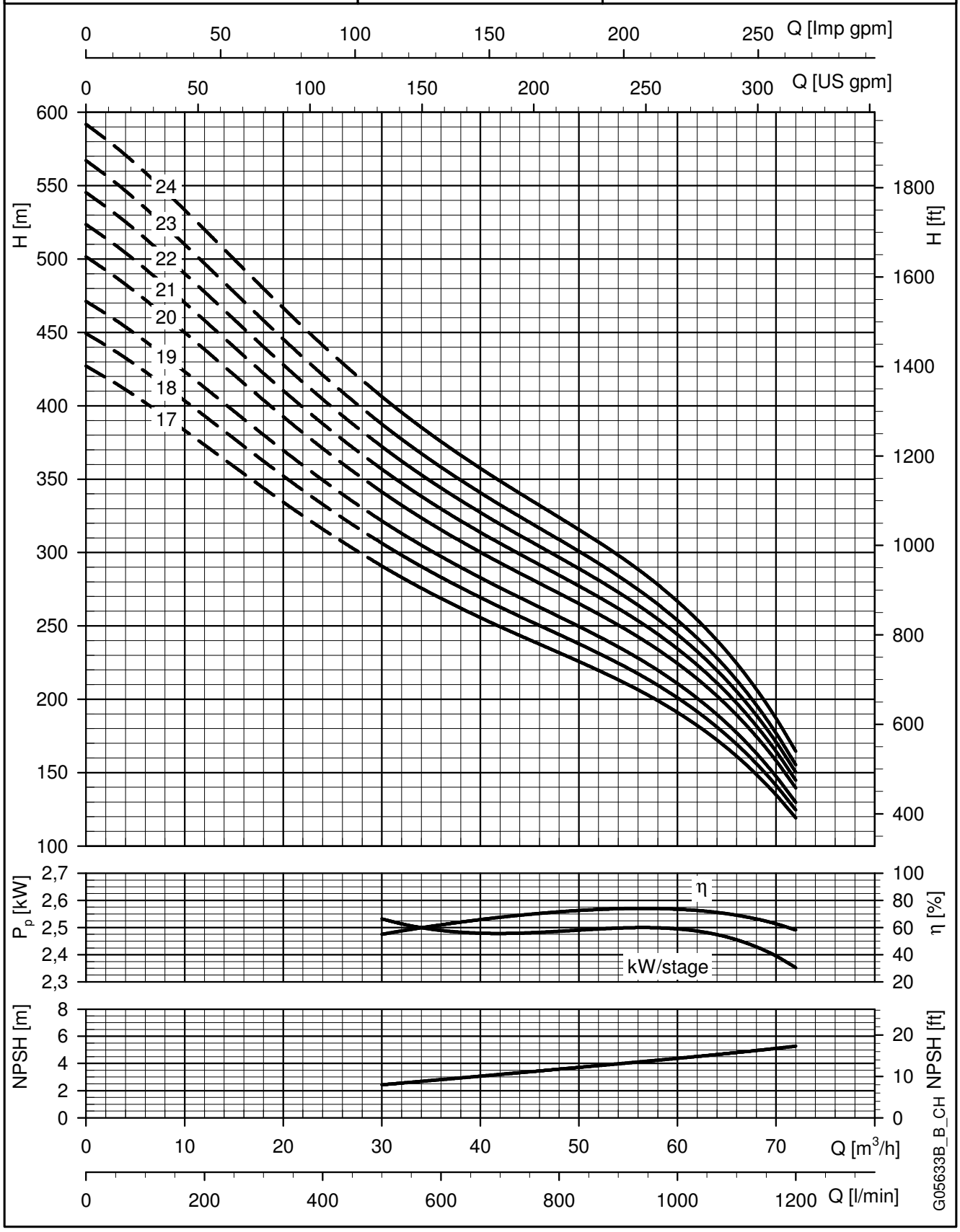

These performances are valid for liquids with density ρ = 1.0 Kg/dm³ and kinematic viscosity ν = 1 mm²/sec.

6GZ660 SERIES, 1 TO 13 STAGES
ELECTROPUMPS OPERATING CHARACTERISTICS

PUMP TYPE	RATED POWER		Q = DELIVERY					
			l/min 0	600	750	1000	1250	1500
			m^3/h 0	36	45	60	75	90
	kW	S.F.	H = TOTAL HEAD METRES COLUMN OF WATER					
6GZ660 01	3	1,15	24,4	16,9	14,8	11,6	8,1	3,3
6GZ660 02	5,5	1,15	48,7	34,4	30,7	25,1	19,3	11,2
6GZ660 03	9,3	1,15	73,1	52,0	46,6	38,6	30,5	19,0
6GZ660 04	11	1,15	95,8	68,5	61,5	51,2	40,8	25,7
6GZ660 05	15	1,15	121,5	86,9	78,2	65,5	52,7	34,4
6GZ660 06	18,5	1,15	146,2	104,6	94,3	79,1	64,1	42,3
6GZ660 07	22	1,15	172,0	123,4	111,3	93,7	76,3	51,3
6GZ660 08	22	1,15	193,7	139,3	125,7	105,8	86,1	57,6
6GZ660 09	26	1,15	221,4	159,2	143,7	121,2	99,2	67,5
6GZ660 10	30	1,15	245,6	176,5	159,3	134,6	110,2	75,1
6GZ660 11	30	1,15	267,3	192,4	173,7	146,7	120,0	81,3
6GZ660 12	37	1,15	293,5	211,2	190,7	161,3	132,2	90,3
6GZ660 13	37	1,15	315,0	227,0	205,0	173,3	141,9	96,5

6GZ660-1-60-en_a_th

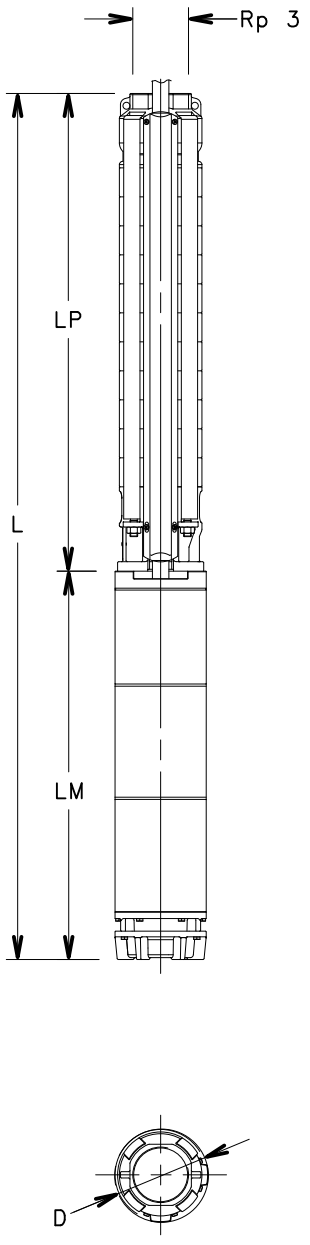

ELECTROPUMPS DIMENSIONS AND WEIGHTS

ELECTRIC PUMP TYPE	RATED POWER		DIMENSIONS (mm)					WEIGHT
	kW	S.F.	L	LM	LP	ø D		
						1 Cable	2 Cables	Kg
6GZ660 01-G4C	3	1,15	957	544	413	142	144	31
6GZ660 02-G4C	5,5	1,15	1212	684	528	142	144	39
6GZ660 02-G6W	5,5	1,15	1141	613	528	144	146	54
6GZ660 03-G6W	9,3	1,15	1326	683	643	144	146	65
6GZ660 04-G6W	11	1,15	1481	723	758	144	146	71
6GZ660 05-G6W	15	1,15	1706	833	873	144	146	86
6GZ660 06-G6W	18,5	1,15	1891	903	988	144	146	96
6GZ660 07-G6W	22	1,15	2046	943	1103	144	146	102
6GZ660 08-G6W	22	1,15	2161	943	1218	144	146	104
6GZ660 09-G6W	26	1,15	2404	1071	1333	144	146	116
6GZ660 10-G6W	30	1,15	2599	1151	1448	144	146	126
6GZ660 11-G6W	30	1,15	2714	1151	1563	144	146	129
6GZ660 12-G6W	37	1,15	2979	1301	1678	144	146	145
6GZ660 13-G6W	37	1,15	3094	1301	1793	144	146	148

6GZ660-1-60-en_b_td

GOULDS WATER TECHNOLOGY
a xylem brand

6GZ660 SERIES, 1 TO 13 STAGES
ELECTROPUMPS OPERATING CHARACTERISTICS

6GZ660	~ 3500 [rpm]	ISO 9906:2012 - Grade 3B

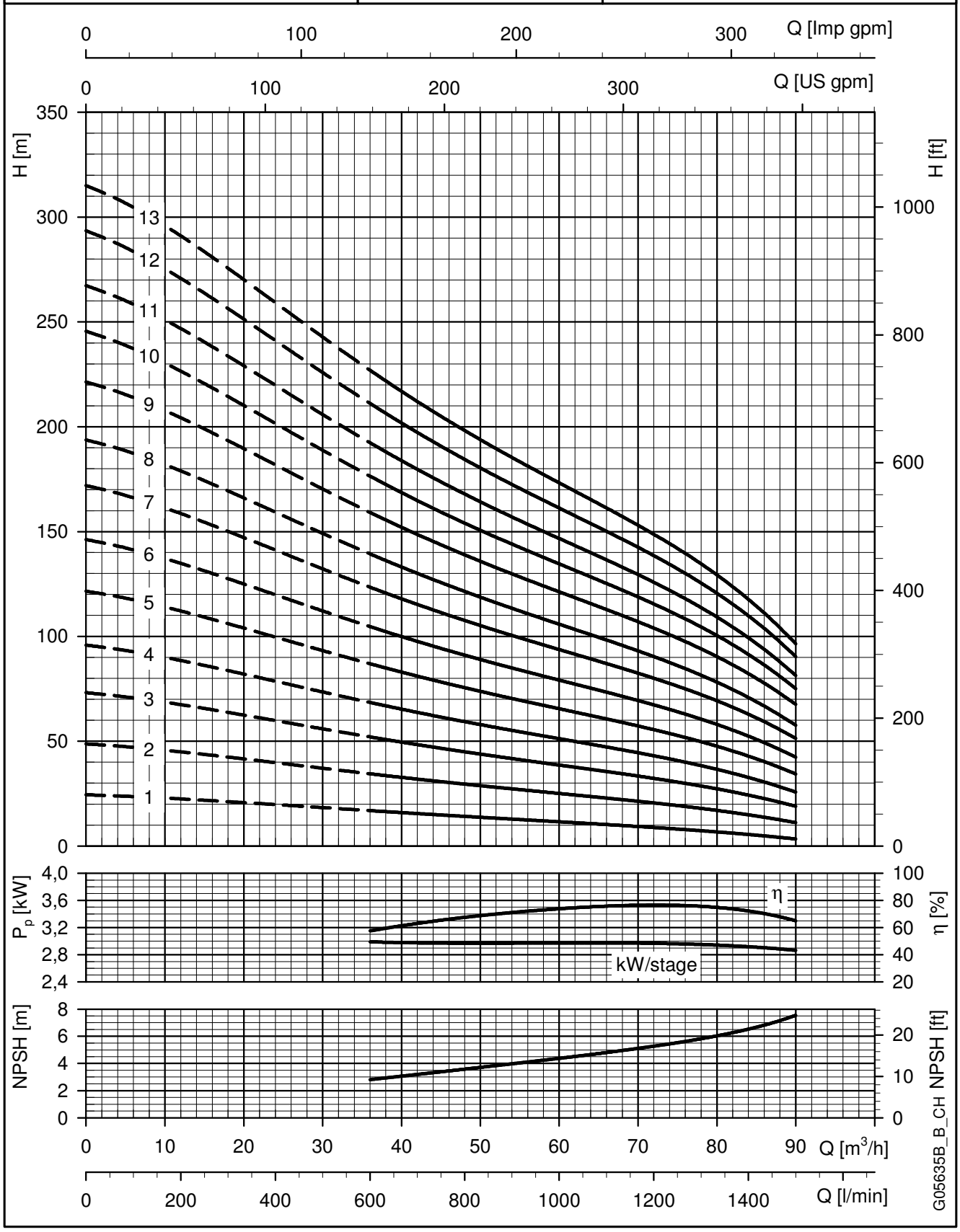

These performances are valid for liquids with density ρ = 1.0 Kg/dm^3 and kinematic viscosity ν = 1 mm^2/sec.

6GZ660 SERIES, 14 TO 20 STAGES
ELECTROPUMPS OPERATING CHARACTERISTICS

PUMP TYPE	RATED POWER		Q = DELIVERY					
			l/min 0	600	750	1000	1250	1500
			m^3/h 0	36	45	60	75	90
	kW	S.F.	H = TOTAL HEAD METRES COLUMN OF WATER					
6GZ660 14D	45	1,15	345,2	248,4	224,5	190,1	156,4	107,9
6GZ660 15D	45	1,15	367,5	264,5	239,0	202,4	166,4	114,4
6GZ660 16D	45	1,15	389,5	280,4	253,4	214,5	176,2	120,7
6GZ660 17D	52	1,15	417,2	300,2	271,4	230,0	189,2	130,5
6GZ660 18D	52	1,15	439,5	316,3	285,9	242,2	199,2	136,8
6GZ660 19D	52	1,15	461,2	332,1	300,2	254,3	208,9	143,0
6GZ660 20D	55	1,15	486,3	351,0	317,4	268,9	221,3	152,3

6GZ660-2-60-en_a_th

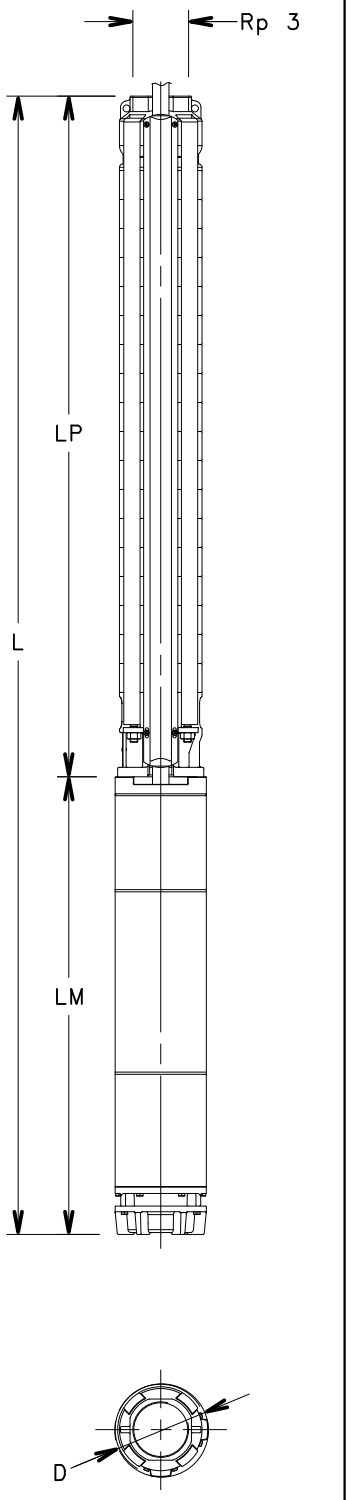

ELECTROPUMPS DIMENSIONS AND WEIGHTS

ELECTRIC PUMP TYPE	RATED POWER		DIMENSIONS (mm)					WEIGHT
	kW	S.F.	L	LM	LP	ø D		
						1 Cable	2 Cables	Kg
6GZ660 14D-G8W	45	1,15	3299	1195	2104	193	195	262
6GZ660 15D-G8W	45	1,15	3299	1195	2104	193	195	263
6GZ660 16D-G8W	45	1,15	3759	1195	2564	193	195	277
6GZ660 17D-G8W	52	1,15	3849	1285	2564	193	195	298
6GZ660 18D-G8W	52	1,15	3849	1285	2564	193	195	299
6GZ660 19D-G8W	52	1,15	3849	1285	2564	193	195	301
6GZ660 20D-G8W	55	1,15	4710	1325	3385	193	195	331

6GZ660-2-60-en_b_td

GOULDS WATER TECHNOLOGY
a xylem brand

6GZ660 SERIES, 14 TO 20 STAGES
ELECTROPUMPS OPERATING CHARACTERISTICS

6GZ660	~ 3500 [rpm]	ISO 9906:2012 - Grade 3B

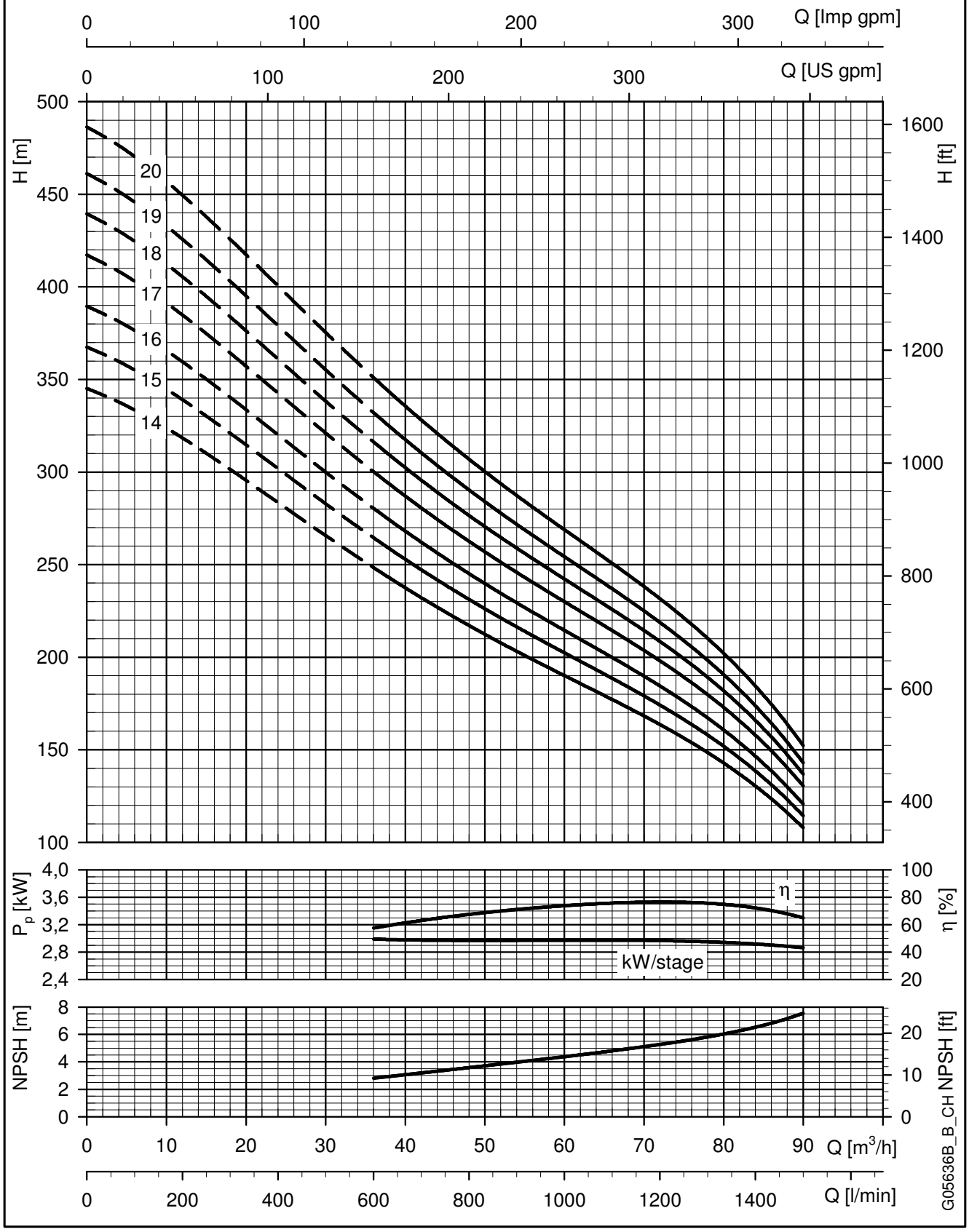

These performances are valid for liquids with density ρ = 1.0 Kg/dm³ and kinematic viscosity ν = 1 mm²/sec.

6GZ612 PUMP SERIES, 1 TO 27 STAGES
PUMPS DIMENSIONS AND WEIGHTS

PUMP TYPE	MAX PUMP POWER at 3500 min^{-1} kW	DIMENSIONS (mm)			WEIGHT kg
		LP	ø D 1 Cable	ø D 2 Cables	
6GZ612 01-4	0,8	380	142	144	9
6GZ612 02-4	1,7	426	142	144	10
6GZ612 03-4	2,5	472	142	144	12
6GZ612 04-4	3,4	518	142	144	13
6GZ612 05-4	4,2	564	142	144	14
6GZ612 06-4	5,0	610	142	144	15
6GZ612 07-4	5,8	656	142	144	16
6GZ612 08-4	6,6	702	142	144	17
6GZ612 09-4	7,4	748	142	144	19
6GZ612 10-4	8,2	794	142	144	20
6GZ612 05-6	4,2	564	142	144	14
6GZ612 06-6	5,0	610	142	144	15
6GZ612 07-6	5,8	656	142	144	16
6GZ612 08-6	6,6	702	142	144	17
6GZ612 09-6	7,4	748	142	144	19
6GZ612 10-6	8,2	794	142	144	20
6GZ612 11-6	9,1	840	142	144	21
6GZ612 12-6	9,9	886	142	144	22
6GZ612 13-6	10,8	932	142	144	23
6GZ612 14-6	11,5	978	142	144	24
6GZ612 15-6	12,3	1024	142	144	26
6GZ612 16-6	13,1	1070	142	144	27
6GZ612 17-6	14,0	1116	142	144	28
6GZ612 18-6	14,8	1162	142	144	29
6GZ612 19-6	15,4	1254	142	144	31
6GZ612 20-6	16,2	1300	142	144	33
6GZ612 21-6	17,0	1346	142	144	34
6GZ612 22-6	18,0	1392	142	144	35
6GZ612 23-6	18,8	1438	142	144	36
6GZ612 24-6	19,6	1484	142	144	37
6GZ612 25-6	20,4	1530	142	144	38
6GZ612 26-6	21,2	1576	142	144	40
6GZ612 27-6	22,1	1622	142	144	41

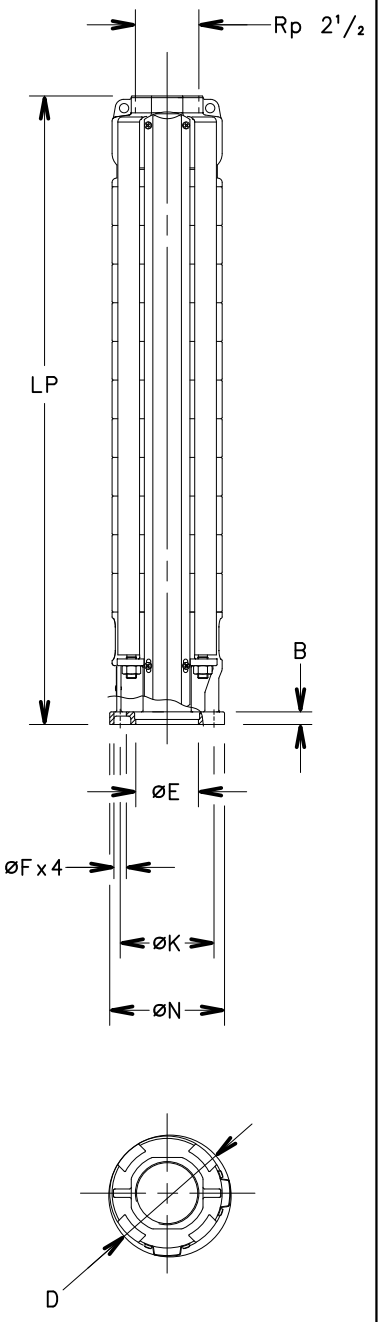

6GZ612p-2p60-en_b_td

PUMPS MOTOR CONNECTION

MOTOR	DIMENSIONS (mm)				
	N	K	F	B	E ^{H7}
4" (NEMA)	130	76,2	9,5	10,5	87,3
6" (NEMA)	136	111,1	14,5	15	76,2
Coupling 4" and 6" according to NEMA standards					

z6-mtcn-2p50-en_a_td

GOULDS WATER TECHNOLOGY
a xylem brand

6GZ612 PUMP SERIES, 28 TO 41 STAGES
PUMPS DIMENSIONS AND WEIGHTS

PUMP TYPE	MAX PUMP POWER at 3500 min^{-1} kW	DIMENSIONS (mm)			WEIGHT kg
		LP	ø D 1 Cable	ø D 2 Cables	
6GZ612 28D-6	22,9	1710	177	180	71
6GZ612 29D-6	23,7	1848	177	180	76
6GZ612 30D-6	24,5	1848	177	180	77
6GZ612 31D-6	25,3	2508	177	180	99
6GZ612 32D-6	26,1	2508	177	180	100
6GZ612 33D-6	27,0	2508	177	180	100
6GZ612 34D-6	27,8	2508	177	180	101
6GZ612 35D-6	28,6	2508	177	180	101
6GZ612 36D-6	29,4	2508	177	180	102
6GZ612 37D-6	30,2	2508	177	180	103
6GZ612 38D-6	31,0	2508	177	180	103
6GZ612 39D-6	31,9	2922	177	180	114
6GZ612 40D-6	32,7	2922	177	180	114
6GZ612 41D-6	33,5	2922	177	180	115

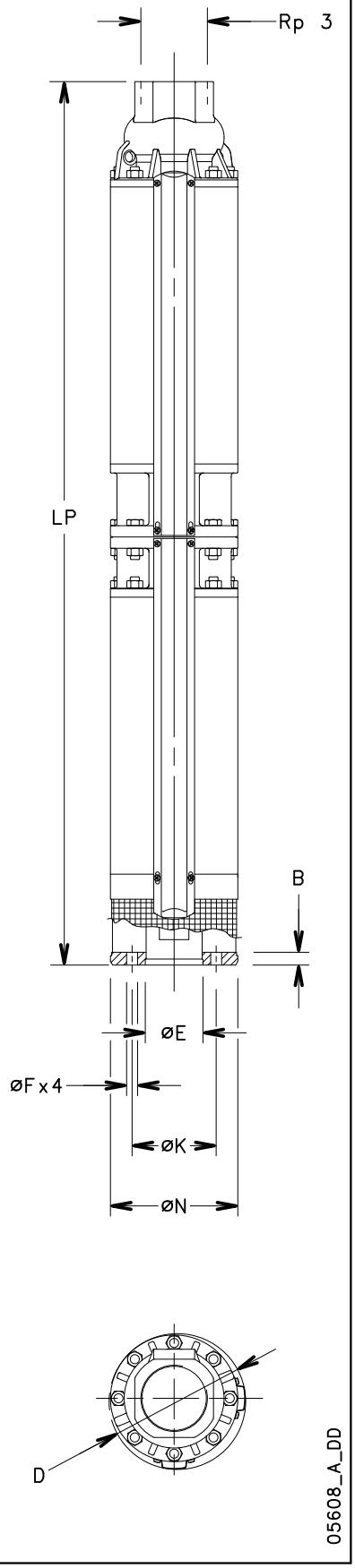

6GZ612pl-2p60-en_b_td

PUMPS MOTOR CONNECTION

MOTOR	DIMENSIONS (mm)				
	N	K	F	B	E ^{H7}
6" (NEMA)	168	111,1	14,5	17	76,2
Coupling 6" according to NEMA standards					

z6a-mtcn-2p50-en_a_td

6GZ616 PUMP SERIES, 1 TO 25 STAGES
PUMPS DIMENSIONS AND WEIGHTS

PUMP TYPE	MAX PUMP POWER at 3500 min^{-1} kW	DIMENSIONS (mm) LP	ø D 1 Cable	ø D 2 Cables	WEIGHT kg
6GZ616 01-4	1,4	380	142	144	9
6GZ616 02-4	2,9	426	142	144	10
6GZ616 03-4	4,3	472	142	144	12
6GZ616 04-4	5,3	518	142	144	13
6GZ616 05-4	6,7	564	142	144	14
6GZ616 06-4	8,1	610	142	144	15
6GZ616 03-6	4,3	472	142	144	12
6GZ616 04-6	5,3	518	142	144	13
6GZ616 05-6	6,7	564	142	144	14
6GZ616 06-6	8,1	610	142	144	15
6GZ616 07-6	9,2	656	142	144	16
6GZ616 08-6	10,5	702	142	144	17
6GZ616 09-6	11,8	748	142	144	19
6GZ616 10-6	13,0	794	142	144	20
6GZ616 11-6	14,3	840	142	144	21
6GZ616 12-6	15,2	886	142	144	22
6GZ616 13-6	16,5	932	142	144	23
6GZ616 14-6	17,7	978	142	144	24
6GZ616 15-6	18,9	1024	142	144	26
6GZ616 16-6	20,2	1070	142	144	27
6GZ616 17-6	21,7	1116	142	144	28
6GZ616 18-6	23,0	1162	142	144	29
6GZ616 19-6	24,3	1254	142	144	31
6GZ616 20-6	25,1	1300	142	144	33
6GZ616 21-6	26,4	1346	142	144	34
6GZ616 22-6	27,7	1392	142	144	35
6GZ616 23-6	29,0	1438	142	144	36
6GZ616 24-6	30,2	1484	142	144	37
6GZ616 25-6	31,5	1530	142	144	38

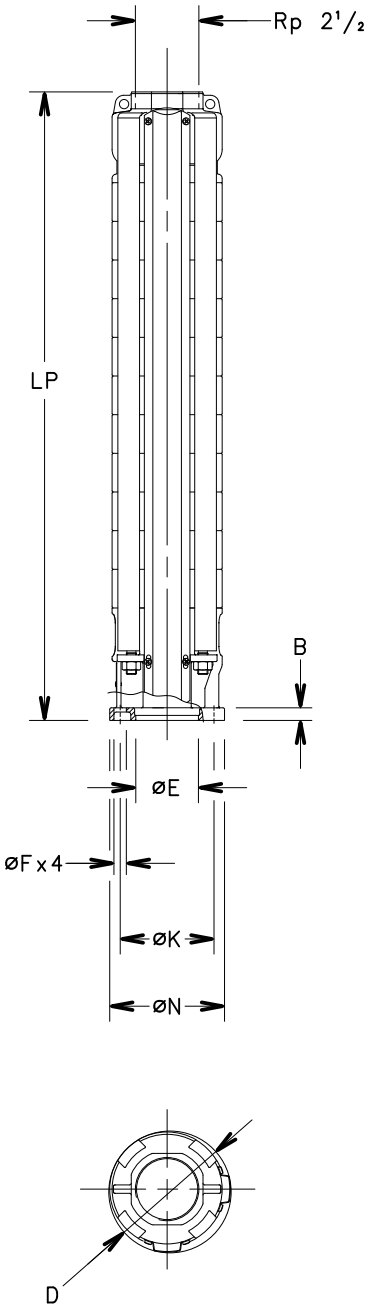

6GZ616p-2p50-en_a_td

PUMPS MOTOR CONNECTION

MOTOR	DIMENSIONS (mm) N	K	F	B	E ^{H7}
4" (NEMA)	130	76,2	9,5	10,5	87,3
6" (NEMA)	136	111,1	14,5	15	76,2
Coupling 4" and 6" according to NEMA standards					

z6-mtcn-2p50-en_a_td

6GZ616 PUMP SERIES, 26 TO 39 STAGES
PUMPS DIMENSIONS AND WEIGHTS

PUMP TYPE	MAX PUMP POWER at 3500 min^{-1} kW	DIMENSIONS (mm)			WEIGHT kg
		LP	ø D 1 Cable	ø D 2 Cables	
6GZ616 26D-6	32,7	1710	177	180	70
6GZ616 27D-6	34,0	1710	177	180	71
6GZ616 28D-6	35,2	1710	177	180	71
6GZ616 29D-6	36,5	1848	177	180	76
6GZ616 30D-6	37,7	1848	177	180	77
6GZ616 31D-6	39,1	2508	177	180	99
6GZ616 32D-6	40,3	2508	177	180	100
6GZ616 33D-6	41,6	2508	177	180	100
6GZ616 34D-6	42,8	2508	177	180	101
6GZ616 35D-8	44,0	2557	193	195	104
6GZ616 36D-8	45,3	2557	193	195	105
6GZ616 37D-8	46,6	2557	193	195	105
6GZ616 38D-8	47,9	2557	193	195	106
6GZ616 39D-8	49,1	2971	193	195	116

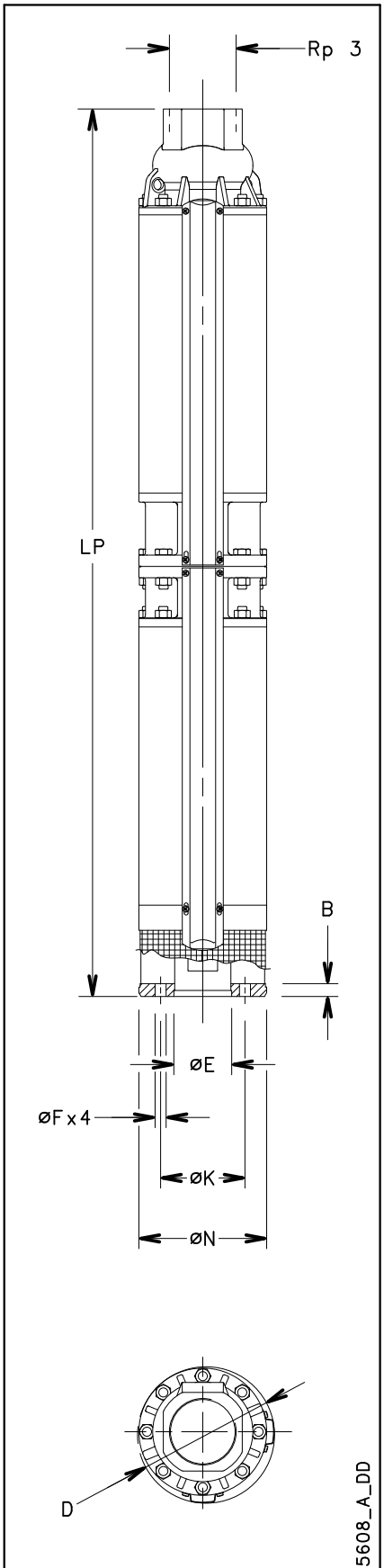

6GZ616pl-2p60-en_a_td

PUMPS MOTOR CONNECTION

MOTOR	DIMENSIONS (mm)				
	N	K	F	B	E ^{H7}
4" (NEMA)	130	76,2	9,5	10,5	87,3
6" (NEMA)	136	111,1	14,5	15	76,2
Coupling 4" and 6" according to NEMA standards					

z6-mtcn-2p50-en_a_td

6GZ622 PUMP SERIES, 1 TO 23 STAGES
PUMPS DIMENSIONS AND WEIGHTS

PUMP TYPE	MAX PUMP POWER 3500 min^{-1} kW	DIMENSIONS (mm) LP	ø D 1 Cable	ø D 2 Cables	WEIGHT kg
6GZ622 01-4	1,8	357	142	144	9
6GZ622 02-4	3,5	426	142	144	10
6GZ622 03-4	5,3	495	142	144	12
6GZ622 04-4	7,0	564	142	144	14
6GZ622 02-6	3,5	426	142	144	10
6GZ622 03-6	5,3	495	142	144	12
6GZ622 04-6	7,0	564	142	144	14
6GZ622 05-6	8,9	633	142	144	15
6GZ622 06-6	10,6	702	142	144	17
6GZ622 07-6	12,3	771	142	144	18
6GZ622 08-6	14,1	840	142	144	20
6GZ622 09-6	15,8	909	142	144	21
6GZ622 10-6	17,4	978	142	144	23
6GZ622 11-6	19,2	1047	142	144	24
6GZ622 12-6	20,9	1116	142	144	26
6GZ622 13-6	22,8	1185	142	144	27
6GZ622 14-6	24,6	1254	142	144	29
6GZ622 15-6	26,3	1323	142	144	31
6GZ622 16-6	28,0	1392	142	144	32
6GZ622 17-6	29,8	1461	142	144	34
6GZ622 18-6	31,1	1530	142	144	35
6GZ622 19-6	32,8	1599	142	144	37
6GZ622 20-6	35,2	1668	142	144	39
6GZ622 21-6	37,0	1737	142	144	40
6GZ622 22-6	38,8	1806	142	144	42
6GZ622 23-6	40,5	1875	142	144	43

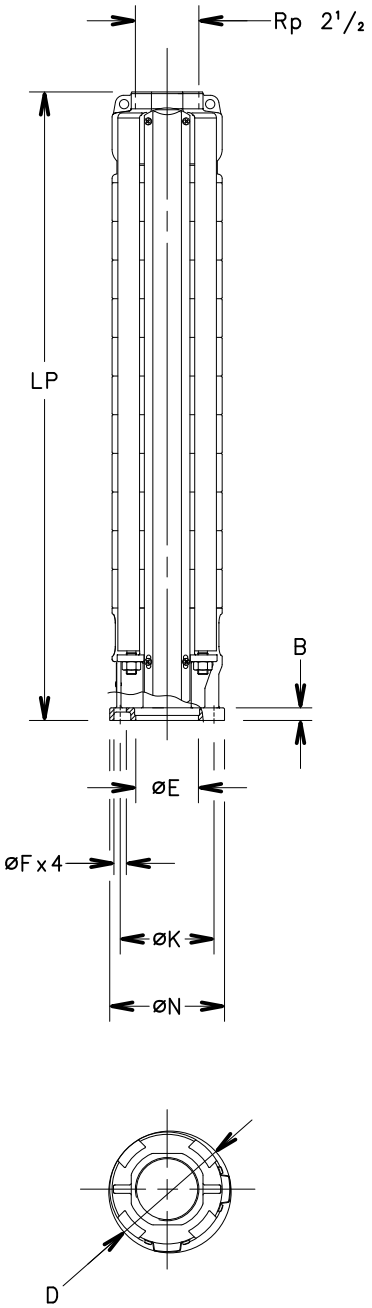

6GZ622p-2p60-en_b_td

PUMPS MOTOR CONNECTION

MOTOR	DIMENSIONS (mm) N	K	F	B	E H7
4" (NEMA)	130	76,2	9,5	10,5	87,3
6" (NEMA)	136	111,1	14,5	15	76,2
Coupling 4" and 6" according to NEMA standards					

z6-mtcn-2p50-en_a_td

6GZ622 PUMP SERIES, 23 TO 34 STAGES
PUMPS DIMENSIONS AND WEIGHTS

PUMP TYPE	MAX PUMP POWER at 3500 min^{-1} kW	DIMENSIONS (mm) LP	ø D 1 Cable	ø D 2 Cables	WEIGHT kg
6GZ622 24D-6	42,3	2055	177	180	81
6GZ622 25D-8	44,0	2104	193	195	84
6GZ622 26D-8	45,8	2557	193	195	100
6GZ622 27D-8	47,6	2557	193	195	101
6GZ622 28D-8	49,3	2557	193	195	101
6GZ622 29D-8	51,1	2971	193	195	112
6GZ622 30D-8	52,9	2971	193	195	112
6GZ622 31D-8	54,6	2971	193	195	113
6GZ622 32D-8	56,4	2971	193	195	114
6GZ622 33D-8	58,1	2971	193	195	115
6GZ622 34D-8	59,9	2971	193	195	115

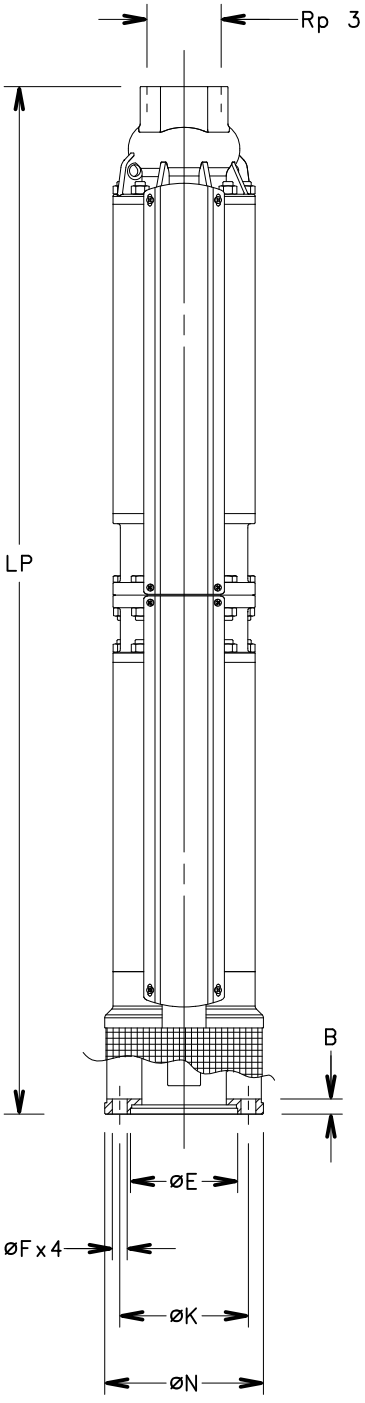

6GZ622pl-2p60-en_b_td

PUMPS MOTOR CONNECTION

MOTOR	DIMENSIONS (mm) N	K	F	B	E H7
6" (NEMA)	168	111,1	14,5	17	76,2
8" (NEMA)	188	152,4	17,5	18	127
Coupling 6" and 8" according to NEMA standards					

z6b-mtcn-2p50-en_a_td

GOULDS WATER TECHNOLOGY
a xylem brand

6GZ631 PUMP SERIES
PUMPS DIMENSIONS AND WEIGHTS

PUMP TYPE	MAX PUMP POWER at 3500 min^{-1} kW	DIMENSIONS (mm) LP	ø D 1 Cable	ø D 2 Cables	WEIGHT kg
6GZ631 01-4	2,4	367	142	144	9
6GZ631 02-4	4,7	436	142	144	10
6GZ631 03-4	6,9	505	142	144	12
6GZ631 02-6	4,7	436	142	144	10
6GZ631 03-6	6,9	505	142	144	12
6GZ631 04-6	9,2	574	142	144	14
6GZ631 05-6	11,4	643	142	144	15
6GZ631 06-6	13,7	712	142	144	17
6GZ631 07-6	15,9	781	142	144	18
6GZ631 08-6	18,1	850	142	144	20
6GZ631 09-6	20,3	919	142	144	21
6GZ631 10-6	22,5	988	142	144	23
6GZ631 11-6	24,8	1057	142	144	24
6GZ631 12-6	27,3	1126	142	144	26
6GZ631 13-6	29,6	1195	142	144	27
6GZ631 14-6	31,5	1264	142	144	29
6GZ631 15-6	33,7	1333	142	144	31
6GZ631 16-6	36,4	1402	142	144	32
6GZ631 17-6	38,6	1471	142	144	34
6GZ631 18-6	40,9	1540	142	144	35
6GZ631 19-6	43,2	1609	142	144	37

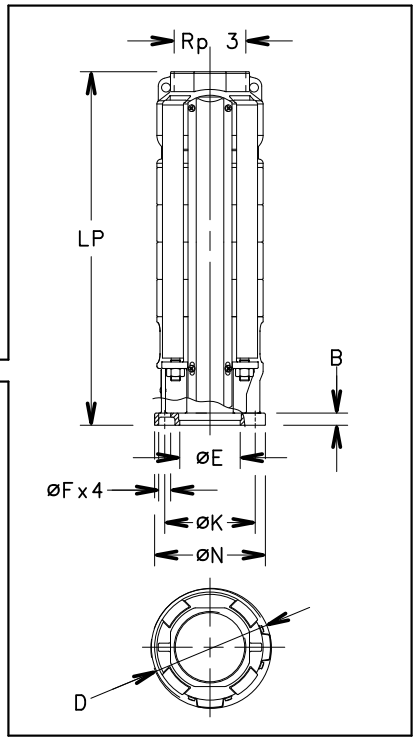

6GZ631 20D-8	45,4	1759	193	195	70
6GZ631 21D-8	47,7	1897	193	195	75
6GZ631 22D-8	50,0	1897	193	195	76
6GZ631 23D-8	52,3	2104	193	195	82
6GZ631 24D-8	54,5	2104	193	195	83
6GZ631 25D-8	56,8	2104	193	195	84
6GZ631 26D-8	59,1	2557	193	195	100
6GZ631 27D-8	61,4	2557	193	195	101
6GZ631 28D-8	63,6	2557	193	195	101

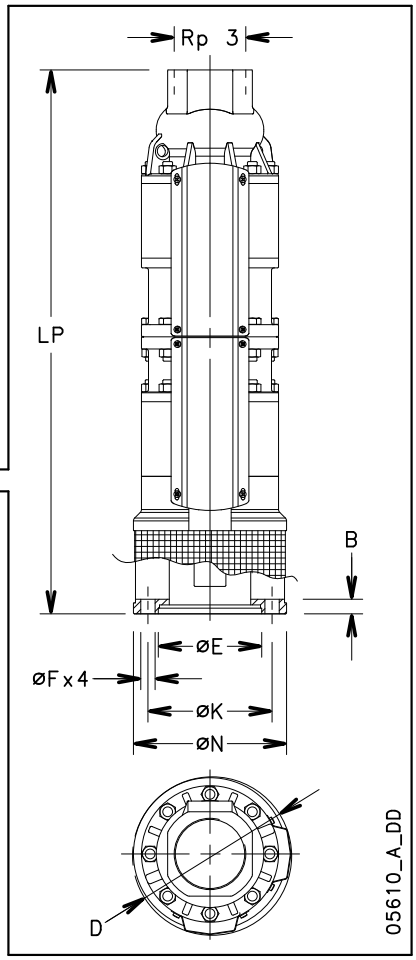

PUMPS MOTOR CONNECTION

6GZ631p-2p60-en_a_td

MOTOR	DIMENSIONS (mm) N	K	F	B	E H7
4" (NEMA)	130	76,2	9,5	10,5	87,3
6" (NEMA)	136	111,1	14,5	15	76,2
8" (NEMA)	188	152,4	17,5	18	127
Coupling 4" - 6" and 8" according to NEMA standards					

z6c-mtcn-2p50-en_a_td

6GZ646 PUMP SERIES
PUMPS DIMENSIONS AND WEIGHTS

PUMP TYPE	MAX PUMP POWER at 3500 min^{-1} kW	DIMENSIONS (mm) LP	ø D 1 Cable	ø D 2 Cables	WEIGHT kg
6GZ646 01-4	2,7	413	142	144	10
6GZ646 02-4	5,3	528	142	144	12
6GZ646 03-4	8,0	643	142	144	15
6GZ646 02-6	5,3	528	142	144	12
6GZ646 03-6	8,0	643	142	144	15
6GZ646 04-6	10,6	758	142	144	17
6GZ646 05-6	13,3	873	142	144	20
6GZ646 06-6	16,0	988	142	144	22
6GZ646 07-6	18,6	1103	142	144	25
6GZ646 08-6	21,3	1218	142	144	27
6GZ646 09-6	23,9	1333	142	144	30
6GZ646 10-6	26,6	1448	142	144	32
6GZ646 11-6	29,3	1563	142	144	35
6GZ646 12-6	31,9	1678	142	144	37
6GZ646 13-6	34,6	1793	142	144	40
6GZ646 14-6	37,3	1908	142	144	42
6GZ646 15-6	39,9	2023	142	144	45
6GZ646 16-6	42,5	2138	142	144	47

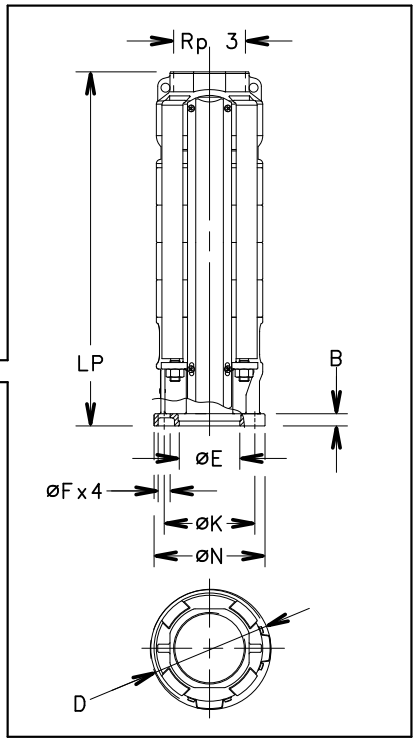

6GZ646 17D-8	45,3	2564	193	195	98
6GZ646 18D-8	47,9	2564	193	195	99
6GZ646 19D-8	50,5	2564	193	195	101
6GZ646 20D-8	53,2	3385	193	195	125
6GZ646 21D-8	55,9	3385	193	195	126
6GZ646 22D-8	58,5	3385	193	195	128
6GZ646 23D-8	61,2	3385	193	195	129
6GZ646 24D-8	63,8	3385	193	195	130

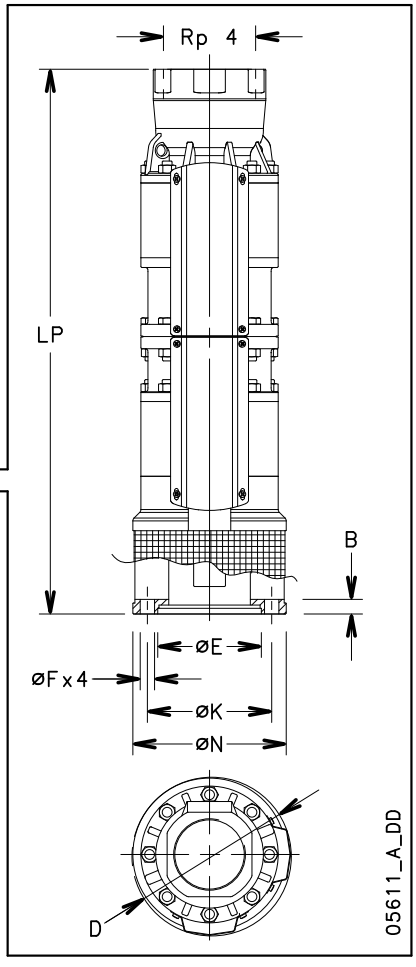

6GZ646p-2p60-en_a_td

PUMPS MOTOR CONNECTION

MOTOR	DIMENSIONS (mm) N	K	F	B	E ^{H7}
4" (NEMA)	130	76,2	9,5	10,5	87,3
6" (NEMA)	136	111,1	14,5	15	76,2
8" (NEMA)	188	152,4	17,5	18	127
Coupling 4" - 6" and 8" according to NEMA standards					

z6c-mtcn-2p50-en_a_td

GOULDS WATER TECHNOLOGY
a xylem brand

6GZ660 PUMP SERIES
PUMPS DIMENSIONS AND WEIGHTS

PUMP TYPE	MAX PUMP POWER at 3500 min^{-1} kW	DIMENSIONS (mm) LP	ø D 1 Cable	ø D 2 Cables	WEIGHT kg
6GZ660 01-4	3,2	413	142	144	10
6GZ660 02-4	6,4	528	142	144	12
6GZ660 02-6	6,4	528	142	144	12
6GZ660 03-6	5,4	643	142	144	15
6GZ660 04-6	12,7	758	142	144	17
6GZ660 05-6	15,9	873	142	144	20
6GZ660 06-6	19,1	988	142	144	22
6GZ660 07-6	22,3	1103	142	144	25
6GZ660 08-6	25,5	1218	142	144	27
6GZ660 09-6	28,7	1333	142	144	30
6GZ660 10-6	31,8	1448	142	144	32
6GZ660 11-6	35,0	1563	142	144	35
6GZ660 12-6	38,2	1678	142	144	37
6GZ660 13-6	41,4	1793	142	144	40

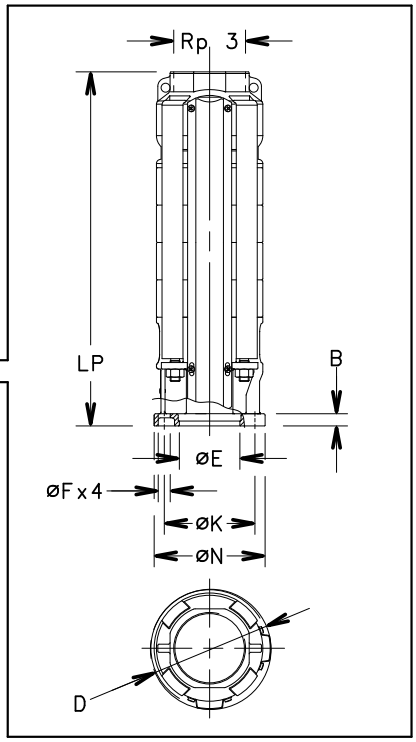

6GZ660 14D-8	44,6	2104	193	195	82
6GZ660 15D-8	47,8	2104	193	195	83
6GZ660 16D-8	50,9	2564	193	195	97
6GZ660 17D-8	54,1	2564	193	195	98
6GZ660 18D-8	57,3	2564	193	195	99
6GZ660 19D-8	60,5	2564	193	195	101
6GZ660 20D-8	63,7	3385	193	195	125

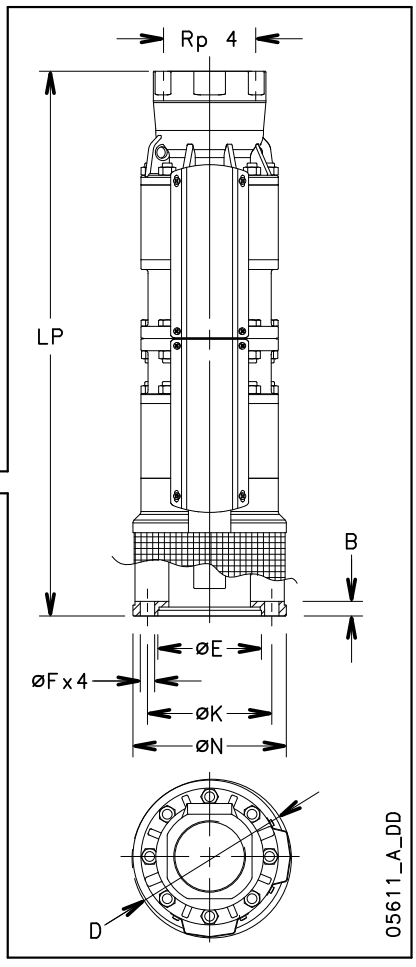

6GZ660p-2p60-en_a_td

PUMPS MOTOR CONNECTION

MOTOR	DIMENSIONS (mm) N	K	F	B	E ^{H7}
4" (NEMA)	130	76,2	9,5	10,5	87,3
6" (NEMA)	136	111,1	14,5	15	76,2
8" (NEMA)	188	152,4	17,5	18	127
Coupling 4" - 6" and 8" according to NEMA standards					

z6c-mtcn-2p50-en_a_td

GOULDS WATER TECHNOLOGY
a xylem brand

ACCESSORIES

G4OS - G4C MOTOR SERIES
MOTOR - CONTROL PANEL COMBINATION TABLE

MOTOR TYPE G4OS - 4" SINGLE-PHASE	RATED POWER		CURRENT AT S.F. 220-230 V	CAPACITOR	PANEL TYPE					
	kW	HP	A	µF / 450 V	QSC...	QSCS...				
	0,37	0,5	3,45	20	...036	...036				
	0,55	0,75	4,73	25	...056	...056				
	0,75	1	6,09	35	...076	...076				
	1,1	1,5	7,61	40	...116	...116				
	1,5	2	10,1	50	...156	...156				
	2,2	3	15,7	50	...226	...226				

For different voltages, please contact our sales network.

G4OSM-2p60-en_a_tc

MOTOR TYPE G4OS - 4" THREE-PHASE	RATED POWER		CURRENT AT S.F. 380 V		PANEL TYPE					
	kW	HP	A		QTD/...	Q3D/...	Q3I/...	Q3A/...	*Q3Y/...	Q3SF/...
	0,37	0,5	1,55		...05-07	...05-07	-	-	-	-
	0,55	0,75	1,88		...05-07	...05-07	-	-	-	-
	0,75	1	2,62		...07-15	...07-15	-	-	-	-
	1,1	1,5	3,27		...07-15	...07-15	-	-	-	-
	1,5	2	4,30		...15-22	...15-22	-	-	-	-
	2,2	3	6,25		...22-40	...22-40	-	-	-	-
	3	4	7,61		...22-40	...22-40	-	-	-	-
	4	5,5	9,05		...40-75	...40-75	...40-75	...40-75	...40-75	...75
	5,5	7,5	12,3		...40-75	...40-75	...40-75	...40-75	...40-75	...75
	7,5	10	19,4		-	...92-110	...92-110	...92-110	...92-110	...150

For different voltages, please contact our sales network.

G4OST-2p60-en_a_tc

* require 6-wire suitable motor

MOTOR TYPE G4C - 4" SINGLE PHASE	RATED POWER		CURRENT AT S.F. 220-230 V	CAPACITOR	PANEL TYPE					
	kW	HP	A	µF / 450 V	QSC/...	QSCS/...				
	0,37	0,5	5,5	20	...036	...036				
	0,55	0,75	7,4	25	...056A	...056A				
	0,75	1	8,9	35	...076	...076				
	1,1	1,5	12,7	40	...116A	...116A				
	1,5	2	13,1	50	...156	...156				
	2,2	3	17,6	50	...226	...226				
	3,7	5	30,7	75	...406	...406				

For different voltages please contact our sales network

G4c_G4cm-2p60_a_tc

MOTOR TYPE G4C - 4" THREE PHASE	RATED POWER		CURRENT AT S.F. 380 V	PANEL TYPE					
	kW	HP	A	QTD/...	Q3D/...	Q3I/...	Q3A/...	*Q3Y/...	Q3SF/...
	0,37	0,5	2,3	...05-07	...05-07	-	-	-	-
	0,55	0,75	2,9	...07-15	...07-15	-	-	-	-
	0,75	1	3,4	...07-15	...07-15	-	-	-	-
	1,1	1,5	4,7	...15-22	...15-22	-	-	-	-
	1,5	2	5,9	...15-22	...15-22	-	-	-	-
	2,2	3	7,2	...22-40	...22-40	-	-	-	-
	3	4	9,5	...22-40	...22-40	-	-	-	...75
	4	5,5	11,6	...40-75	...40-75	...40-75	...40-75	...40-75	...75
	5,5	7,5	15,7	...40-75	...40-75	...40-75	...40-75	...40-75	...75
	7,5	10	20	-	...92-110	...92-110	...92-110	...92-110	...150

For different voltages please contact our sales network

G4ct-2p60_a_tc

* Require 6-wire suitable motor

G6C - G6W MOTOR SERIES
MOTOR - CONTROL PANEL COMBINATION TABLE

MOTOR TYPE G6C - 6" THREE-PHASE	RATED POWER		CURRENT AT S.F. 380 V	PANEL TYPE					
	kW	HP	A	QTD/...	Q3D/...	*Q3Y/...	Q3I/...	Q3A/...	Q3SF/...
	4	5,5	11,5	...40-75	...40-75	...40-75	...40-75	...40-75	...75
	5,5	7,5	16,1	...75-92	...75-92	...75-92	...75-92	...75-92	...75
	7,5	10	20	-	...92-110	...92-110	...92-110	...92-110	...150
	9,3	12,5	25	-	...110-150	...110-150	...110-150	...110-150	...150
	11	15	28,2	-	...110-150	...110-150	...110-150	...110-150	...150
	15	20	37,3	-	...150-185	...150-185	...150-185	...150-185	...220
	18,5	25	48,4	-	...185-220	...185-220	...185-220	...185-220	...300
	22	30	60,2	-	...220-300	...220-300	...220-300	...220-300	...370
	30	40	75	-	-	...370-450	...370-450	...370-450	...450
	37	50	90	-	-	...450-550	...450-550	...450-550	...550

For different voltages please contact our sales network

G6c-2p60_a_tc

* require 6-wire suitable motor

MOTOR TYPE G6W - 6" THREE-PHASE	RATED POWER		CURRENT AT S.F. 380 V	PANEL TYPE					
	kW	HP	A	QTD/...	Q3D/...	Q3I/...	Q3A/...	Q3Y/...	Q3SF/...
	4	5,5	11,2	...40-75	...40-75	...40-75	...40-75	...40-75	...75
	5,5	7,5	15,1	...40-75	...40-75	...40-75	...40-75	...40-75	...75
	7,5	10	19,4	...75-92	...75-92	...75-92	...75-92	...75-92	...150
	9,3	12,5	23,8	-	...92-110	...92-110	...92-110	...92-110	...150
	11	15	27,8	-	...110-150	...110-150	...110-150	...110-150	...150
	13	17,5	32,9	-	...150-185	...150-185	...150-185	...150-185	...220
	15	20	36,6	-	...150-185	...150-185	...150-185	...150-185	...220
	18,5	25	45,1	-	...185-220	...185-220	...185-220	...185-220	...300
	22	30	53,8	-	...220-300	...220-300	...220-300	...220-300	...300
	26	35	66,5	-	...300-370	...300-370	...300-370	...300-370	...370
	30	40	72,6	-	...300-370	...300-370	...300-370	...300-370	...370
	37	50	95,9	-	-	...450-550	...450-550	...450-550	...550
MOTOR TYPE	4	5,5	12,3	...40-75	...40-75	...40-75	...40-75	...40-75	...75
G6W HT - 6"	5,5	7,5	15,5	...40-75	...40-75	...40-75	...40-75	...40-75	...75
THREE-PHASE	7,5	10	20,2	...92-110	...92-110	...92-110	...92-110	...92-110	...150
	9,3	12,5	24,2	-	...92-110	...92-110	...92-110	...92-110	...150
	11	15	28,9	-	...110-150	...110-150	...110-150	...110-150	...150
	13	17,5	34,1	-	...150-185	...150-185	...150-185	...150-185	...220
	15	20	38,3	-	...150-185	...150-185	...150-185	...150-185	...220
	18,5	25	46,3	-	...185-220	...185-220	...185-220	...185-220	...300
	22	30	58,6	-	...220-300	...220-300	...220-300	...220-300	...300
	26	35	64,8	-	...300-370	...300-370	...300-370	...300-370	...370
	30	40	82,1	-	...370-450	...370-450	...370-450	...370-450	...450

For different voltages, please contact our sales network.

G6w-2p60_a_tc

G8W MOTOR SERIES
MOTOR - CONTROL PANEL COMBINATION TABLE

MOTOR TYPE G8W - 8" THREE-PHASE	RATED POWER		CURRENT AT S.F. 380 V	PANEL TYPE					
	kW	HP	A		Q3I/...	Q3A/...	Q3SF/...		
	30	40	78,0		...370-450	...370-450	...450		
	37	50	96,1		...450-550	...450-550	...550		
	45	60	114		...550-750	...550-750	...590		
	52	70	134		...550-750	...550-750	...750		
	55	75	139		...750-900	...750-900	...750		
	60	80	149		...750-900	...750-900	...900		
	67	90	168		...750-900	...750-900	...900		
	75	100	187		...900-1100	...900-1100	...1100		
	83	110	206		...900-1100	...900-1100	...1100		
	93	125	231		...1100-1320	...1100-1320	...1100		
MOTOR TYPE G8W HT - 8" THREE-PHASE	30	40	78,7		...370-450	...370-450	...450		
	37	50	92,0		...450-550	...450-550	...550		
	45	60	107		...450-550	...450-550	...590		
	52	70	129		...550-750	...550-750	...750		
	55	75	136		...550-750	...550-750	...750		
	60	80	149		...750-900	...750-900	...900		
	67	90	166		...750-900	...750-900	...900		
	75	100	185		...900-1100	...900-1100	...900		
	83	110	197		...900-1100	...900-1100	...1100		

For different voltages, please contact our sales network.

G8w-2p60_a_tc

COOLING SHROUDS

01890_B_DD

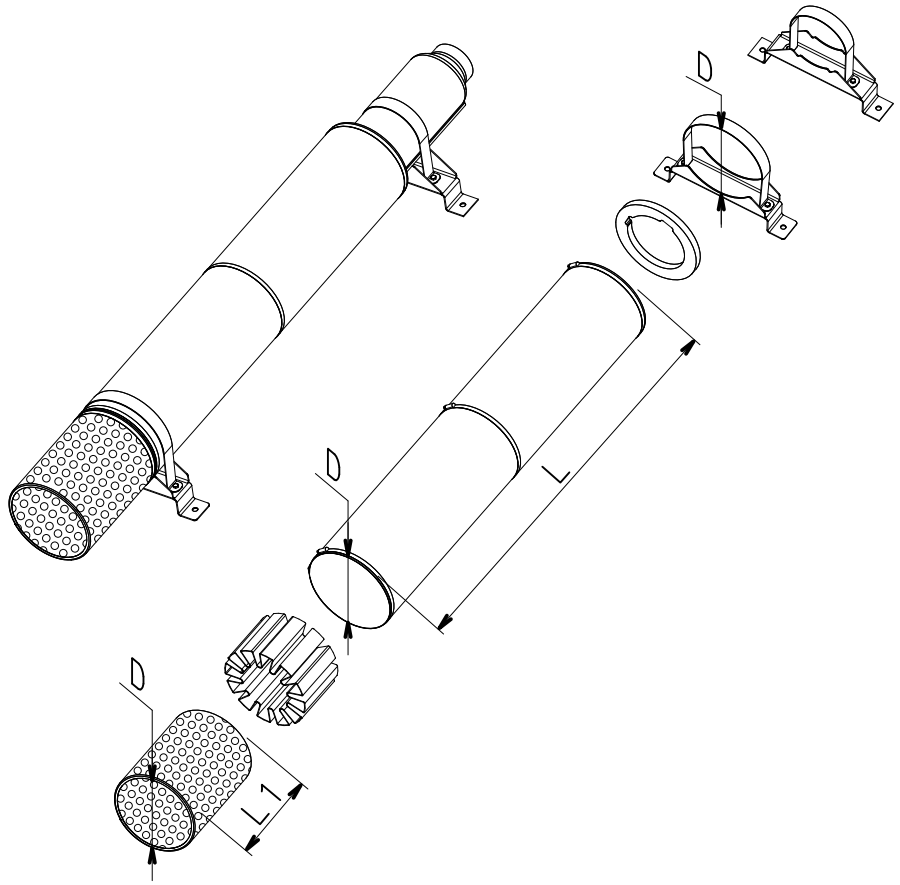

PUMP TYPE	MOTOR TYPE				COOLING SET SHROUD (D x L)	COOLING SET FILTER (D x L1)	COOLING SET SUPPORTS (D)
	G4OS/B	G4C	G6C	G6W			
GZ612 GZ616 GZ622 GZ631 GZ646	0,55	0,55			D160X800	D160X158	D160 - 2pcs
	0,75	0,75					
	1,1	1,1					
	1,5	1,5					
	2,2	2,2					
	3	3					
	4	4					
	5,5	5,5			D160X1000	D160X158	D160 - 2pcs
	7,5	7,5					
GZ660	4	4			D180X1000	D180X192	D180 - 2pcs
	5,5	5,5					
	7,5	7,5					
GZ612 GZ616 GZ622 GZ631 GZ646			3	3	D180X1000	D180X192	D180 - 2pcs
			4	4			
			5,5	5,5			
			7,5	7,5			
			9,3	9,3			
			11	11			
			-	13			
			15	15			
			18,5	18,5			
			22	22	D180X1500	D180X192	D180 - 3pcs
			-	26			
			30	30			
			37	37			
GZ660			4	4	D200X1000	D200X192	D200 - 2pcs
			5,5	5,5			
			7,5	7,5			
			9,3	9,3			
			11	11			
			-	13			
			15	15			
			18,5	18,5			
			22	22	D200X1500	D200X192	D200 - 3pcs
			-	26			
			30	30			
			37	37			

Note: Not available for high pressure version.

z6_kit-raf50-en_a_ta

THREADED FLANGES ISO

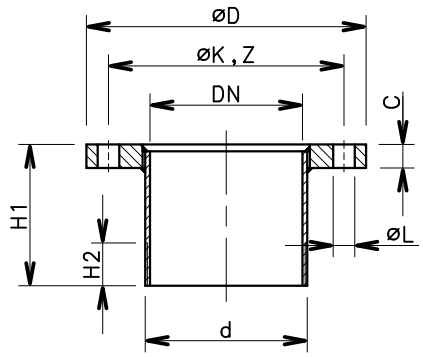

THREADING UNI ISO 7/1 d	Dimensions (mm) Flange according to EN 1092-1								
	DN	PN	Ø D	Ø K	Z	Ø L	C	H1	H2
R 2 1/2	65	40	185	145	8	18	24	100	30
R 3	80	40	200	160	8	18	26	110	35
R 4	100	40	235	190	8	22	26	120	40

z6-flange-en_a_td

03731A_A_SC

CARRYING CLAMPS

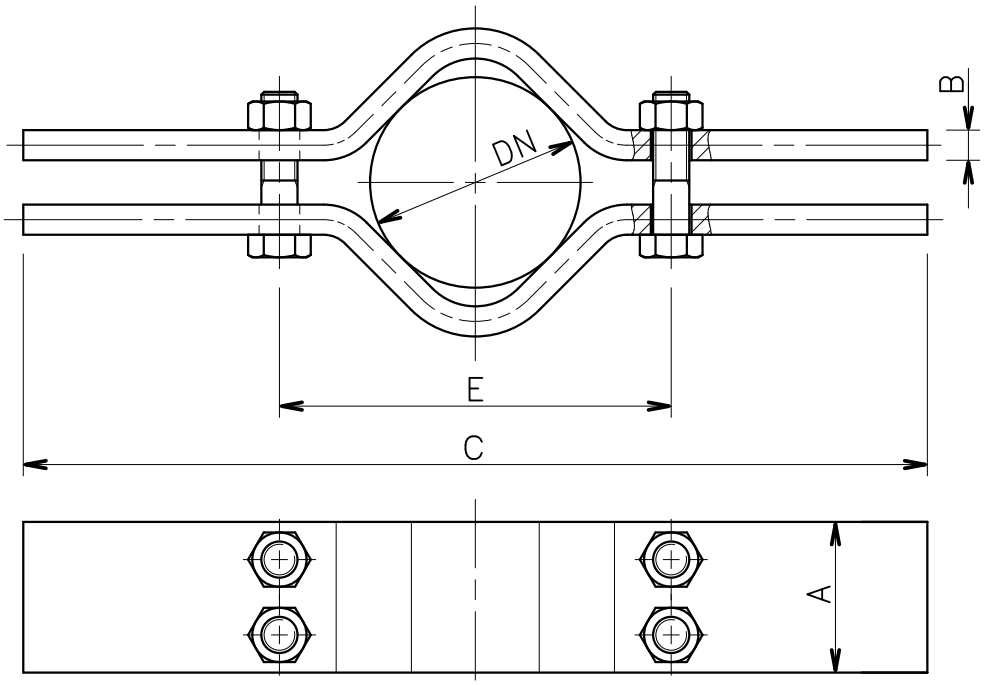

03730_A_SC

Ø PIPE NOMINAL DN		CARRYNG CLAMPS Dimensions (mm)					Pmax (1)	PIPE WEIGHT Flanged	Threaded	Water
		A	B	C	E	SCREW	kg	kg/m	kg/m	kg/m
65	R 2 1/2	50	15	600	130	M16x90	1300	6,7	8,0	3,3
80	R 3	80	15	600	180	M20x70	3400	8,4	10,5	5,0
100	R 4	80	15	600	180	M20x110	3400	20,5	15,0	7,9

1) Max weight allowable.

z6-clamp-en_a_td

GOULDS WATER TECHNOLOGY
a xylem brand

TECHNICAL APPENDIX

SUBMERSIBLE ELECTRIC PUMP INSTALLATION DIAGRAM

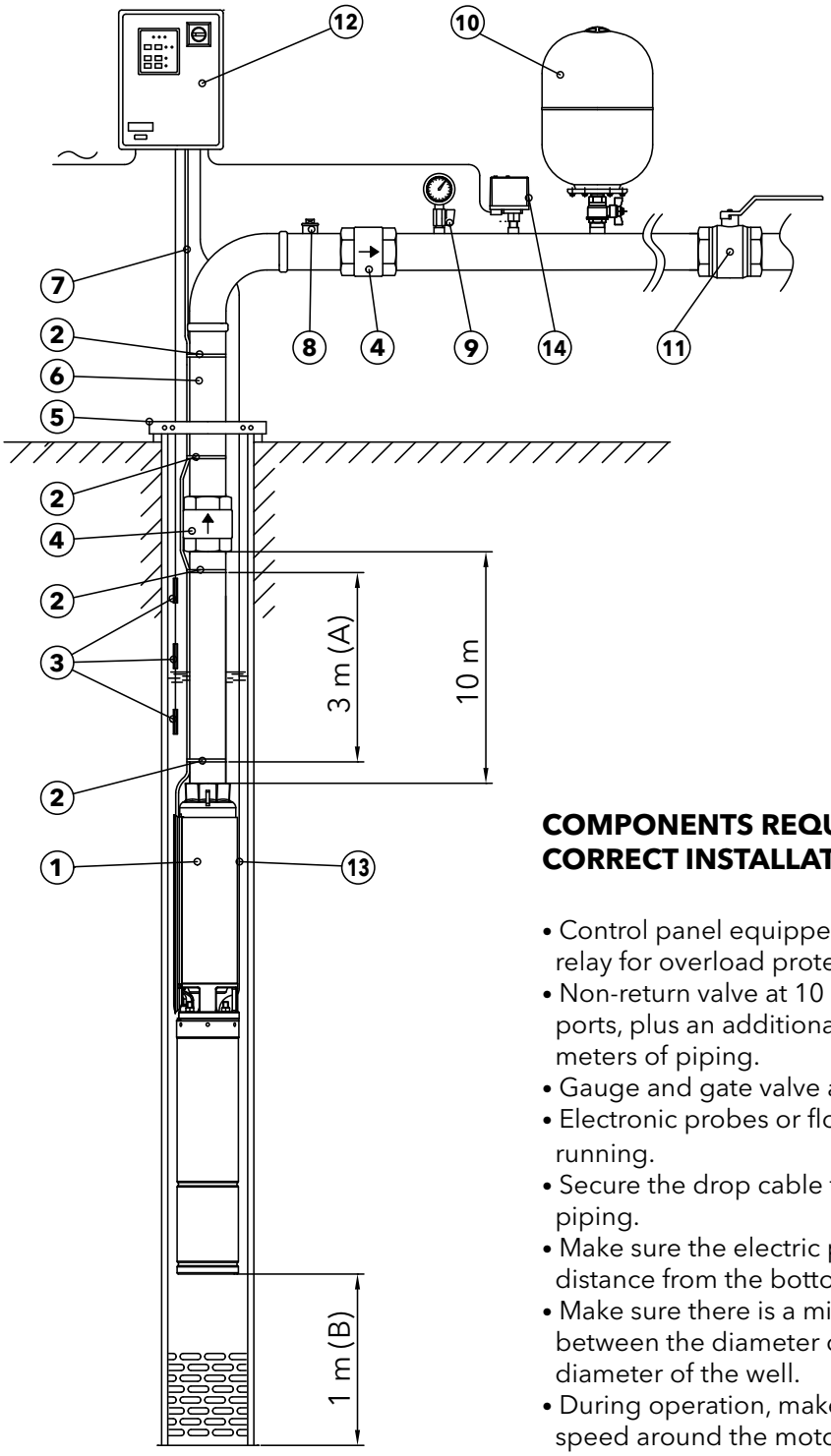

1 - Submersible electric pump.
2 - Cable clamp.
3 - Level sensors for protection against dry running.
4 - Non-return valve.
5 - Support bracket.
6 - Delivery pipe.
7 - Electrical cable for motor power.
8 - Electric pump bleed/ priming cap.
9 - Pressure gauge.
10 - Diaphragm tank.
11 - Gate valve.
12 - Control panel.
13 - PTC/PT100 cable.
14 - Pressure transducer.

A - Distance between the clamps that secure the drop cable to the delivery pipe.
B - Distance from the bottom of the well to the electric pump.

COMPONENTS REQUIRED FOR CORRECT INSTALLATION

- Control panel equipped with a main switch and thermal relay for overload protection.
- Non-return valve at 10 meters' distance from the delivery ports, plus an additional non-return valve every 30÷50 meters of piping.
- Gauge and gate valve at well mouth.
- Electronic probes or floats for protection against dry running.
- Secure the drop cable to the pipe every 2÷3 meters of piping.
- Make sure the electric pump is installed at a safe distance from the bottom of the well.
- Make sure there is a minimum distance of 3 mm between the diameter of the pump and the internal diameter of the well.
- During operation, make sure that the water circulation speed around the motor is at least 8 cm/sec.
- Make sure that the minimum dynamic level of the water in the well is at least 1 m above the pump's delivery port.

A0033_B_SC

EXAMPLE OF INSTALLATION OF A SUBMERSIBLE ELECTRIC PUMP CONTROLLED BY AN INVERTER

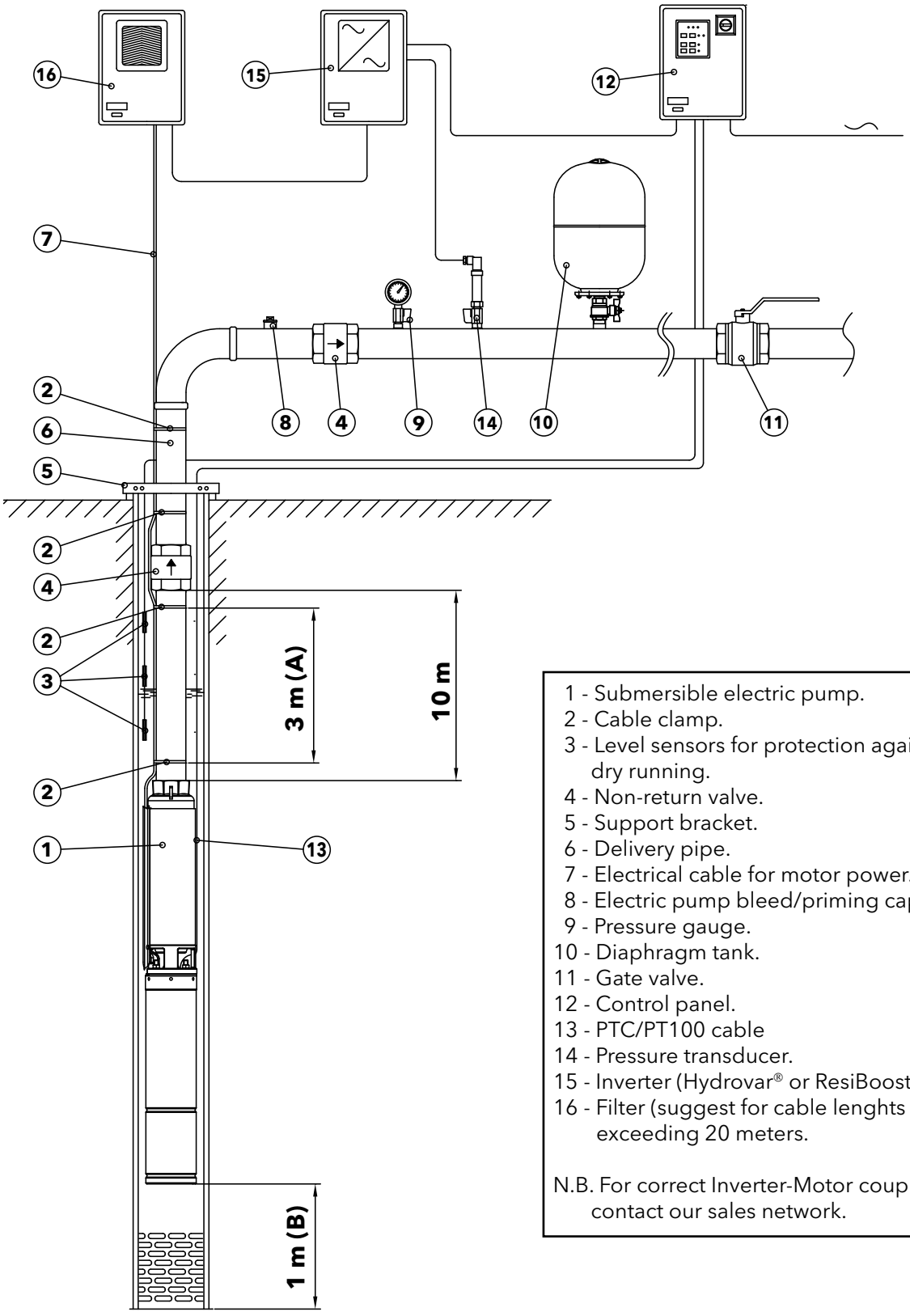

1 - Submersible electric pump.
2 - Cable clamp.
3 - Level sensors for protection against dry running.
4 - Non-return valve.
5 - Support bracket.
6 - Delivery pipe.
7 - Electrical cable for motor power.
8 - Electric pump bleed/priming cap.
9 - Pressure gauge.
10 - Diaphragm tank.
11 - Gate valve.
12 - Control panel.
13 - PTC/PT100 cable
14 - Pressure transducer.
15 - Inverter (Hydrovar® or ResiBoost).
16 - Filter (suggest for cable lenghts exceeding 20 meters.

N.B. For correct Inverter-Motor coupling, contact our sales network.

A0034_B_SC

6G4OS -6G4C - 6G6C - 6G6W - 6G8W - 6G10W - 6G12W MOTOR SERIES

TABLE OF POWER REDUCTION COEFFICIENTS WITH INCREASED WATER TEMPERATURE

MOTOR TYPE	RATED POWER kW	TEMPERATURE °C							
		25	30	35	40	45	50	55	60
G4OS	all models	1,00	1,00	1,00	0,90	0,80	0,70	0,60	-
G4C		1,00	1,00	1,00	0,95	0,90	0,85	0,80	-
G6C		1,00	1,00	1,00	0,95	0,80	0,75	0,70	0,60
G6W		1,00	1,00	0,75	-	-	-	-	-
G8W		1,00	1,00	0,75	-	-	-	-	-
G10W		1,00	1,00	0,75	-	-	-	-	-
G12W		1,00	1,00	0,75	-	-	-	-	-
G6W..HT		1,00	1,00	1,00	1,00	1,00	0,85	0,75	0,65
G8W..HT		1,00	1,00	1,00	1,00	1,00	0,85	0,75	0,65
G10W..HT		1,00	1,00	1,00	1,00	1,00	0,85	0,75	0,65
G12W..HT		1,00	1,00	1,00	1,00	1,00	0,85	0,75	0,65

G4OS-GC-GW-derating-en_a_te

EXAMPLE 1
A 2,2 kW G4OS motor is to be used in 50°C water.
Motor power at 50 °C = 2,2 x 0,7 = 1,54 kW

EXAMPLE 2
A 2,2 kW G4C motor is to be used in 50°C water.
Motor power at 50 °C = 2,2 x 0,85 = 1,87 kW

EXAMPLE 3
A 7,5 kW G6C motor is to be used in 45°C water.
Motor power at 50 °C = 7,5 x 0,8 = 6 kW

EXAMPLE 4
A 15 kW G6W motor is to be used in 35°C water.
Motor power at 35 °C = 15 x 0,75 = 11,25 kW

SELECTING CABLE CROSS-SECTIONS FOR SUBMERSIBLE MOTORS

To select the cross-section of power cables for submersible pumps, consult the tables shown below. In these tables, the maximum lenghts of the power cable for each cross-section are shown for each motor and next to the various input voltage ratings.
Therefore, to find the required cable cross-section, simply read off the maximum permitted lenghts for each cross-section next to the selected motor and required input voltage.

E.g.:
A 120 m long power cable must be matched with a 230V G4C07M235 motor.
To determine the cross-section of the cable, simply move along the row of the 230V motor until you find the maximum lenght of 120 m or immediately above it and then read off the corresponding cross-section in that column.
In this case, the 4 mm^2 cable is selected.

N.B.: the tables include specific data (current and power factor) for each motor and voltage rating based on a maximum voltage drop of 4% (HD 384.5), a maximum cable temperature of 90°C, water installation similar to air installation at a temperature of 30°C.

CABLE TYPES

	THREE CORE FLAT					FOUR CORE FLAT					SINGLE CORE ROUND			FOUR CORE ROUND		
SECTION	Hmin	Lmin	Hmax	Lmax	Weight	Hmin	Lmin	Hmax	Lmax	Weight	Dmin	Dmax	Weight	Dmin	Dmax	Weight
mm^2	mm	mm	mm	mm	kg/km	mm	mm	mm	mm	kg/km	mm	mm	kg/km	mm	mm	kg/km
4	8	19,2	9	20,8	250	8	25,2	9	26,8	395	6,5	7,5	92	14	16,1	360
6	8	19,2	9	20,8	325	8	25,2	9	26,8	470	7,4	8	118	15,7	18	475
10	8	19,2	9	20,8	535	8	25,2	9	26,8	710	8,6	10	183	20,9	23,9	836
16	-	-	-	-	-	-	-	-	-	-	9,6	11	251	23,8	27,1	1145
25	-	-	-	-	-	-	-	-	-	-	11	13	362	28,9	32,9	1716
35	-	-	-	-	-	-	-	-	-	-	12,5	14,5	497	-	-	-
50	-	-	-	-	-	-	-	-	-	-	15	17	669	-	-	-
70	-	-	-	-	-	-	-	-	-	-	17,5	19,5	901	-	-	-
95	-	-	-	-	-	-	-	-	-	-	20,5	22,5	1141	-	-	-
120	-	-	-	-	-	-	-	-	-	-	22	24,4	1435	-	-	-
150	-	-	-	-	-	-	-	-	-	-	25,2	28,3	1795	-	-	-
185	-	-	-	-	-	-	-	-	-	-	27,6	31	2156	-	-	-
240	-	-	-	-	-	-	-	-	-	-	30,6	34,5	2760	-	-	-

L-cavi-en_a_td

6G4OS SINGLE-PHASE, 60 Hz: SIZING OF ETHYLENE-PROPILENE (EPR) CABLES, DOL (DIRECT ON LINE) STARTING

MOTOR TYPE SINGLE-PHASE	RATED POWER Kw	RATED POWER HP	RATED VOLTAGE V	Cos φ	CURRENT AT S.F. A	VOLTAGE DROP %	Cable cross section: 4G x ...mm²							
							mm²	1,5	2,5	4	6	10	16	25	35
							A max	23	32	42	54	75	100	127	158
							Maximum lenght in metres								
G4OS03M236	0,37	0,5	220	0,99	4,50	4		71	118	191	286				
			230	0,98	4,42										
G4OS05M236	0,55	0,8	220	0,99	6,23			51	85	137	206	356			
			230	0,97	6,00										
G4OS07M236	0,75	1	220	0,97	7,41			43	73	117	176	304			
			230	0,94	7,36										
G4OS11M236	1,1	1,5	220	0,99	9,34			33	56	91	137	237	373		
			230	0,99	9,05										
G4OS15M236	1,5	2	220	0,99	12,2			25	42	69	104	181	285	441	
			230	0,97	11,9										
G4OS22M236	2,2	3	220	0,93	17,1			17	31	51	78	135	212	324	
			230	0,90	17,1										
G4OS03M116	0,37	0,5	110	0,99	9,02			17	29	47	71	123	193	299	418
			115	0,98	8,86										
G4OS05M116	0,55	0,75	110	0,98	12,3			12	21	35	52	91	143	220	307
			115	0,94	12,3										
G4OS07M116	0,75	1	110	0,98	14,5			10	18	29	44	76	120	186	259
			115	0,95	14,3										
G4OS11M116	1,1	1,5	110	0,99	18,1			8	14	23	35	60	96	148	208
			115	0,98	17,7										

Exposed cable laid at a temperature of 30°C, maximum conductor temperature of 90°C

G4OSm-b_cavi-60_a_te

6G4OS THREE-PHASE, 60 Hz: SIZING OF ETHYLENE-PROPILENE (EPR) CABLES, DOL (DIRECT ON LINE) STARTING

MOTOR TYPE THREE-PHASE	RATED POWER Kw	RATED POWER HP	RATED VOLTAGE V	Cos φ	CURRENT AT S.F. A	VOLTAGE DROP %	Cable cross section: 4G x ...mm²							
							mm²	1,5	2,5	4	6	10	16	25	35
							A max	23	32	42	54	75	100	127	158
							Maximum lenght in metres								
G4OS03T236	0,37	0,5	220	0,62	3,17	4		184	305						
			230	0,56	3,31										
G4OS05T236	0,55	0,75	220	0,71	4,00			127	212	339					
			230	0,65	4,05										
G4OS07T236	0,75	1	220	0,66	5,21			104	174	279	414				
			230	0,59	5,51										
G4OS11T236	1,1	1,5	220	0,72	6,53			76	127	204	304				
			230	0,65	6,70										
G4OS15T236	1,5	2	220	0,71	8,40			59	99	160	239	407			
			230	0,65	8,73										
G4OS22T236	2,2	3	220	0,71	11,6			41	71	115	172	294	454		
			230	0,64	12,5										
G4OS30T236	3	4	220	0,79	14,5			29	50	82	124	213	331		
			230	0,72	14,8										
G4OS40T236	4	5,5	220	0,85	17,7			21	37	62	94	163	254	386	
			230	0,81	17,4										
G4OS55T236	5,5	7,5	220	0,86	24,4			-	33	52	78	133	206	312	428
			230	0,83	23,8										
G4OS75T236	7,5	10	220	0,75	36,8			-	-	29	47	84	133	201	276
			230	0,68	38,1										
G4OS03T386	0,37	0,5	380	0,62	1,83			552							
G4OS05T386	0,55	0,75	380	0,71	2,31			382							
G4OS07T386	0,75	1	380	0,66	3,01			315	522						
G4OS11T386	1,1	1,5	380	0,72	3,77			230	383						
G4OS15T386	1,5	2	380	0,71	4,85			180	301	482					
G4OS22T386	2,2	3	380	0,71	6,69			129	217	349	519				
G4OS30T386	3	4	380	0,79	8,35			92	156	251	376				
G4OS40T386	4	5,5	380	0,85	10,2			69	118	191	287	492			
G4OS55T386	5,5	7,5	380	0,86	14,1			47	82	135	203	351			
G4OS75T386	7,5	10	380	0,75	21,2			32	59	99	150	261	406		

Exposed cable laid at a temperature of 30°C, maximum conductor temperature of 90°C

G4OSt-b_cavi-60_a_te

6G4C SINGLE-PHASE, 60 Hz: SIZING OF ETHYLENE-PROPILENE (EPR) CABLES, DOL (DIRECT ON LINE) STARTING

MOTOR TYPE	RATED POWER		RATED VOLTAGE	Cos φ	CURRENT AT S.F.	VOLTAGE DROP	Cable cross section: 4G x ...mm²							
							mm²	1,5	2,5	4	6	10	16	25	35
							A max	23	32	42	54	75	100	127	158
SINGLE-PHASE	Kw	HP	V		A	%	Maximum lenght in metres								
G4C03M236	0,37	0,5	220	0,93	5,3	4		63	106	171	256	440			
			230	0,89	5,5										
G4C05M236	0,55	0,75	220	0,89	7,0			49,6	83,4	135	202	346			
			230	0,84	7,4										
G4C07M236	0,75	1	220	0,93	8,5			40	68	110	165	284	443		
			230	0,89	8,9										
G4C11M236	1,1	1,5	220	0,88	12,2			27,5	47,2	77	116	199	312		
			230	0,84	12,7										
G4C15M236	1,5	2	220	0,98	13,1			23	39	65	98	170	267	412	
			230	0,97	12,8										
G4C22M236	2,2	3	220	0,96	17,6			16,3	29	48,1	73,2	127	201	309	
			230	0,96	17,1										
G4C40M236	4,0	5,5	220	0,93	30,7			-	15	26	41	73	116	179	249
			230	0,92	29,7										
G4C03M116	0,37	0,5	110	0,93	10,6			15,2	26	42,3	63,6	110	172	262	364
			115	0,89	11,0										
G4C05M116	0,55	0,75	110	0,89	14,0			12	20	33	50	86	134	205	282
			115	0,84	14,8										
G4C07M116	0,75	1	110	0,93	17,0			9,03	16,1	26,6	40,5	70,2	110	168	232
			115	0,89	17,8										

Exposed cable laid at a temperature of 30°C, maximum conductor temperature of 90°C

G4Cm-cavi-60-en_a_te

6G4C THREE-PHASE, 60 Hz: SIZING OF ETHYLENE-PROPILENE (EPR) CABLES, DOL (DIRECT ON LINE) STARTING

MOTOR TYPE	RATED POWER		RATED VOLTAGE	Cos φ	CURRENT AT S.F.	VOLTAGE DROP	Cable cross section: 4G x ...mm²							
							mm²	1,5	2,5	4	6	10	16	25	35
							A max	23	32	42	54	75	100	127	158
THREE-PHASE	Kw	HP	V		A	%	Maximum lenght in metres								
G4C03T236	0,37	0,5	220	0,78	3,5			131	218						
			230	0,76	3,8										
G4C05T236	0,55	0,75	220	0,82	4,6			95,8	160	257					
			230	0,77	4,8										
G4C07T236	0,75	1	220	0,74	5,3			92,9	155	249	371				
			230	0,72	5,6										
G4C11T236	1,1	1,5	220	0,75	7,5			63	106	171	255				
			230	0,72	7,8										
G4C15T236	1,5	2	220	0,71	9,4			52,2	88,4	143	213	363			
			230	0,68	9,8										
G4C22T236	2,2	3	220	0,77	11,5			39,5	67,7	110	165	282	438		
			230	0,75	12										
G4C30T236	3	4	220	0,73	16,5			27,4	48,4	79,8	121	207	321		
			230	0,7	17,3										
G4C40T236	4	5,5	220	0,8	18,8			20,6	36,9	61,3	93,2	161	252	380	
			230	0,78	19,2										
G4C55T236	5,5	7,5	220	0,8	25,4			-	25,6	43,6	67,3	118	185	280	385
			230	0,78	26										
G4C03T386	0,37	0,5	380	0,76	2,3	4		359							
G4C05T386	0,55	0,75	380	0,77	2,9			281							
G4C07T386	0,75	1	380	0,72	3,4			255	425						
G4C11T386	1,1	1,5	380	0,72	4,7			184	306						
G4C15T386	1,5	2	380	0,68	5,9			154	257	413					
G4C22T386	2,2	3	380	0,75	7,2			114	191	307	458				
G4C30T386	3	4	380	0,73	9,5			86,8	147	238	355				
G4C40T386	4	5,5	380	0,78	11,6			65,3	112	181	272	466			
G4C55T386	5,5	7,5	380	0,78	15,7			45,8	80,3	132	199	343			
G4C75T386	7,5	10	380	0,8	20			-	59,3	98,9	151	261	408		

Exposed cable laid at a temperature of 30°C, maximum conductor temperature of 90°C

G4C-cavi-60-en_a_te

6G6C, 60 Hz: SIZING OF ETHYLENE-PROPILENE (EPR) CABLES DOL (DIRECT ON LINE) STARTING

MOTOR TYPE THREE-PHASE	RATED POWER Kw	RATED POWER HP	RATED VOLTAGE V	Cos φ	CURRENT AT S.F. A	VOLTAGE DROP %	Cable cross section: 4G x ...mm²								
							mm²	4	6	10	16	25	35	50	70
							A max	42	54	75	100	127	158	192	246
							Maximum lenght in metres								
G6C40T236	4	5,5	230	0,80	19,0	4		63	96	167	260	393	539		
G6C40T386			380	0,80	11,5			179	268	460					
G6C40T406			460	0,80	9,5			264	394						
G6C55T236	5,5	7,5	230	0,80	26,6			43	67	117	184	279	384	527	
G6C55T386			380	0,80	16,1			125	189	327	509				
G6C55T406			460	0,80	13,1			189	284	488	758				
G6C75T236	7,5	10	230	0,81	33,0			33	52	92	146	222	306	421	
G6C75T386			380	0,81	20,0			98	149	258	404				
G6C75T406			460	0,81	16,5			146	221	381	594				
G6C93T236	9,3	12,5	230	0,80	41,2			25	40	73	116	178	245	338	457
G6C93T386			380	0,80	25,0			77	118	207	325	492			
G6C93T406			460	0,80	20,6			116	177	307	479				
G6C110T236	11	15	230	0,82	46,6			-	33	62	99	153	212	294	399
G6C110T386			380	0,82	28,2			-	101	178	281	427			
G6C110T406			460	0,82	23,3			-	151	264	414				
G6C150T236	15	20	230	0,83	61,6			-	-	43	72	112	157	219	299
G6C150T386			380	0,83	37,3			-	72	130	207	317	438		
G6C150T406			460	0,83	30,8			-	109	194	307	468			
G6C185T236	18,5	25	230	0,80	80,0			-	-	-	54	86	121	169	232
G6C185T386			380	0,80	48,4			-	53	99	161	248	343	474	
G6C185T406			460	0,80	40			-	83	150	240	367	506		
G6C220T236	22	30	230	0,77	99,6			-	-	-	42	68	97	137	187
G6C220T386			380	0,77	60,2			-	-	79	130	202	280	387	523
G6C220T406			460	0,77	49,8			-	65	120	195	300	414		
G6C300T386	30	40	380	0,82	75,0			-	-	55	94	150	211	296	405
G6C300T406			460	0,82	62,0			-	-	87	144	225	314	438	
G6C370T386	37	50	380	0,88	90,0			-	-	-	70	114	164	233	325
G6C370T406			460	0,88	77,0			-	-	-	104	166	237	335	463

Exposed cable laid at a temperature of 30°C, maximum conductor temperature of 90°C

G6C_cavi-60-en_a_te

6G6C, 60 Hz: SIZING OF ETHYLENE-PROPILENE (EPR) CABLES
Y/Δ (STAR / DELTA) STARTING

MOTOR TYPE THREE-PHASE	RATED POWER Kw	RATED POWER HP	RATED VOLTAGE V	Cos φ	RATED CURRENT A	VOLTAGE DROP %	Cable cross section: 4G x ...mm² + 3 x ...mm²							
							mm²	4	6	10	16	25	35	50	70
							A max*	73	94	130	173	220	274	333	426
							Maximum lenght in metres								
G6C40T236	4	5,5	230	0,80	19,0	4		114	170	292	453				
G6C40T386			380	0,80	11,5			314	468						
G6C40T406			460	0,80	9,5			460							
G6C55T236	5,5	7,5	230	0,80	26,6			80	120	207	323	487			
G6C55T386			380	0,80	16,1			223	333						
G6C55T406			460	0,80	13,1			333	497						
G6C75T236	7,5	10	230	0,81	33,0			62	95	164	257	388	533		
G6C75T386			380	0,81	20,0			176	264	453					
G6C75T406			460	0,81	16,5			260	389						
G6C93T236	9,3	12,5	230	0,80	41,2			49	76	132	207	313	430		
G6C93T386			380	0,80	25,0			141	212	365	568				
G6C93T406			460	0,80	20,6			209	314	538					
G6C110T236	11	15	230	0,82	46,6			42	65	113	178	271	373	514	
G6C110T386			380	0,82	28,2			121	183	316	492				
G6C110T406			460	0,82	23,3			179	270	464					
G6C150T236	15	20	230	0,83	61,6			29	46	83	132	202	278	385	522
G6C150T386			380	0,83	37,3			88	135	234	367	556			
G6C150T406			460	0,83	30,8			132	200	345	540				
G6C185T236	18,5	25	230	0,80	80,0			-	34	64	103	158	218	301	407
G6C185T386			380	0,80	48,4			67	105	184	289	439			
G6C185T406			460	0,80	40			102	156	272	426				
G6C220T236	22	30	230	0,77	99,6			-	-	50	83	128	178	246	332
G6C220T386			380	0,77	60,2			53	84	150	238	361	496		
G6C220T406			460	0,77	49,8			82	127	223	351	532			
G6C300T386	30	40	380	0,82	75,0			-	60	111	178	274	379	524	
G6C300T406			460	0,82	62,0			58	93	166	264	404	558		
G6C370T386	37	50	380	0,88	90,0			-	44	84	137	213	299	418	574
G6C370T406			460	0,88	77,0			40	66	122	197	305	425		

Exposed cable laid at a temperature of 30°C, maximum conductor temperature of 90°C

G6C_cavi-SD-60_a_te

*A max is the maximum rated current of the motor

6G6W, 60 Hz: SIZING OF ETHYLENE-PROPILENE (EPR) CABLES DOL (DIRECT ON LINE) STARTING

MOTOR TYPE THREE-PHASE	RATED POWER Kw	RATED POWER HP	RATED VOLTAGE V	Cos φ AT S.F.	CURRENT AT S.F. A	VOLTAGE DROP %	Cable cross section: 4G x ...mm² mm2	4	6	10	16	25	35	50	70
							A max	42	54	75	100	127	158	192	246
							Maximum lenght in metres								
G6W40T236	4	5,5	230	0,83	19,0			61	93	161	252	382	525		
G6W40T386			380	0,87	11,2			170	255	438					
G6W40T406			460	0,87	9,2			253	379						
G6W55T236	5,5	7,5	230	0,79	26,4			44	68	120	188	284	390		
G6W55T386			380	0,84	15,1			128	194	334	521				
G6W55T406			460	0,85	12,2			192	289	497					
G6W75T236	7,5	10	230	0,82	33,6			32	50	89	141	216	297	411	
G6W75T386			380	0,86	19,4			96	146	253	396				
G6W75T406			460	0,87	15,8			143	216	374	585				
G6W93T236	9,3	12,5	230	0,82	41,3			24	39	71	113	174	241	333	451
G6W93T386			380	0,86	23,8			76	117	204	321	489			
G6W93T406			460	0,87	19,5			114	173	301	472				
G6W110T236	11	15	230	0,83	47,9			-	32	59	95	147	205	284	386
G6W110T386			380	0,87	27,8			62	97	172	271	414			
G6W110T406			460	0,87	22,8			95	146	256	403	614			
G6W130T236	13	17,5	230	0,81	57,4			-	-	48	79	124	172	239	325
G6W130T386			380	0,85	32,9			52	82	146	232	354	490		
G6W130T406			460	0,88	26,4	4		80	123	217	343	524			
G6W150T236	15	20	230	0,84	62,5			-	-	42	70	109	153	214	293
G6W150T386			380	0,87	36,6			44	70	127	203	312	433		
G6W150T406			460	0,86	30,5			68	107	190	301	460			
G6W185T236	18,5	25	230	0,82	78,2			-	-	-	54	86	122	171	235
G6W185T386			380	0,86	45,1			-	55	101	164	253	351	489	
G6W185T406			460	0,87	36,7			-	85	153	245	376	522		
G6W220T236	22	30	230	0,82	91,9			-	-	-	44	71,1	102	144	198
G6W220T386			380	0,85	53,8			-	44	83	136	211	295	411	
G6W220T406			460	0,84	45,0			-	68	125	202	312	433	601	
G6W260T236	26	35	230	0,76	117			-	-	-	-	56	81	115	159
G6W260T386			380	0,81	66,5			-	-	66	110	173	243	338	461
G6W260T406			460	0,83	53,7			-	-	103	168	261	363	505	
G6W300T236	30	40	230	0,82	126			-	-	-	-	47,2	69,7	100	141
G6W300T386			380	0,86	72,6			-	-	55	94	150	212	298	410
G6W300T406			460	0,86	61,0			-	-	85	141	221	310	433	594
G6W370T386	37	50	380	0,82	95,9			-	-	-	68	112	160	226	313
G6W370T406			460	0,84	77,1			-	-	-	108	172	244	343	471

Exposed cable laid at a temperature of 30°C, maximum conductor temperature of 90°C

G6W_cavi-60_a_te

6G6W, 60 Hz: SIZING OF ETHYLENE-PROPILENE (EPR) CABLES
Y/Δ (STAR / DELTA) STARTING

MOTOR TYPE THREE-PHASE	RATED POWER Kw	RATED POWER HP	RATED VOLTAGE V	Cos φ AT S.F.	CURRENT AT S.F. A	VOLTAGE DROP %	Cable cross section: 4G x ...mm² + 3 x ...mm²							
							mm²	4	6	10	16	25	35	50	70
							A max*	73	94	130	173	220	274	333	426
							Maximum lenght in metres								
G6W40T236	4	5,5	230	0,83	19,0			110	165	282	440				
G6W40T386			380	0,87	11,2			297	445						
G6W40T406			460	0,87	9,2			441							
G6W55T236	5,5	7,5	230	0,79	26,4			81	123	211	329	496			
G6W55T386			380	0,84	15,1			227	340	582					
G6W55T406			460	0,85	12,2			338	505						
G6W75T236	7,5	10	230	0,82	33,6			61	92	160	249	378	519		
G6W75T386			380	0,86	19,4			172	258	443					
G6W75T406			460	0,87	15,8			254	380						
G6W93T236	9,3	12,5	230	0,82	41,3			48	74	129	202	307	421		
G6W93T386			380	0,86	23,8			139	209	360	562				
G6W93T406			460	0,87	19,5			204	307	528					
G6W110T236	11	15	230	0,83	47,9			40	62	109	172	261	360	496	
G6W110T386			380	0,87	27,8			116	176	304	476				
G6W110T406			460	0,87	22,8			174	261	450					
G6W130T236	13	17,5	230	0,81	57,4			33	51	92	145	221	304	419	567
G6W130T386			380	0,85	32,9			99	151	261	409				
G6W130T406			460	0,88	26,4	4		147	222	384					
G6W150T236	15	20	230	0,84	62,5			28	45	81	128	197	272	377	512
G6W150T386			380	0,87	36,6			86	131	229	359	548			
G6W150T406			460	0,86	30,5			129	195	338	529				
G6W185T236	18,5	25	230	0,82	78,2			21	35	64	103	158	219	304	412
G6W185T386			380	0,86	45,1			68	106	186	293	447			
G6W185T406			460	0,87	36,7			104	159	276	434				
G6W220T236	22	30	230	0,82	91,9			-	28	53	86	133	185	257	350
G6W220T386			380	0,85	53,8			56	88	155	246	376	519		
G6W220T406			460	0,84	45,0			85	131	230	362	552			
G6W260T236	26	35	230	0,76	117			-	-	41	69	108	151	209	283
G6W260T386			380	0,81	66,5			44	71	128	205	313	432		
G6W260T406			460	0,83	53,7			69	109	193	305	464			
G6W300T236	30	40	230	0,82	126			-	-	35	59	94	132	185	253
G6W300T386			380	0,86	72,6			37	60	110	177	273	379	527	
G6W300T406			460	0,86	61,0			57	90	162	258	396	549		
G6W370T386	37	50	380	0,82	95,9			-	-	83	135	210	293	407	553
G6W370T406			460	0,84	77,1			-	69	127	205	316	438		

Exposed cable laid at a temperature of 30°C, maximum conductor temperature of 90°C

G6W_cavi-SD-60_a_te

*A max is the maximum rated current of the motor

6G8W, 60 Hz: SIZING OF ETHYLENE-PROPILENE (EPR) CABLES DOL (DIRECT ON LINE) STARTING

MOTOR TYPE THREE-PHASE	RATED POWER Kw	RATED POWER HP	RATED VOLTAGE V	Cos φ AT S.F.	CURRENT AT S.F. A	VOLTAGE DROP %	Cable cross section: 4G x ...mm² mm2	10	16	25	35	50	70	95	120	150
							A max	75	100	127	158	192	246	298	346	399
							Maximum lenght in metres									
G8W300T386	30	40	380	0,83	78,0	4		-	89	142	201	282	387	485		
G8W300T406			460	0,83	64,4			81	136	213	299	418				
G8W370T386	37	50	380	0,83	96,1			-	68	110	158	224	310	391	478	
G8W370T406			460	0,83	79,4			-	105	168	238	335	460			
G8W450T386	45	60	380	0,85	114			-	52	87	127	182	255	324	398	
G8W450T406			460	0,85	94,3			-	82	134	193	273	379	479		
G8W520T386	52	70	380	0,83	134			-	-	-	106	154	217	276	339	442
G8W520T406			460	0,83	110			-	-	112	163	232	324	409	501	
G8W550T386	55	75	380	0,85	139			-	-	-	99	144	205	262	323	426
G8W550T406			460	0,85	115			-	-	104	152	219	306	389	478	
G8W600T386	60	80	380	0,85	149			-	-	-	90	133	189	243	301	398
G8W600T406			460	0,85	123			-	-	95	140	202	284	362	446	
G8W670T386	67	90	380	0,86	168			-	-	-	-	113	163	212	263	352
G8W670T406			460	0,86	139			-	-	-	118	173	247	316	391	516
G8W750T386	75	100	380	0,85	187			-	-	-	-	99	145	189	235	318
G8W750T406			460	0,85	154			-	-	-	104	154	220	284	351	465
G8W830T386	83	110	380	0,85	206			-	-	-	-	-	128	168	211	288
G8W830T406			460	0,85	170			-	-	-	-	135	196	254	315	421
G8W930T386	93	125	380	0,87	231			-	-	-	-	-	109	146	184	257
G8W930T406			460	0,87	191			-	-	-	-	114	169	221	277	377

Exposed cable laid at a temperature of 30°C, maximum conductor temperature of 90°C

G8W_cavi-60_a_te

6G8W, 60 Hz: SIZING OF ETHYLENE-PROPILENE (EPR) CABLES
Y/Δ (STAR / DELTA) STARTING

MOTOR TYPE THREE-PHASE	RATED POWER Kw	RATED POWER HP	RATED VOLTAGE V	Cos φ AT S.F.	CURRENT AT S.F. A	VOLTAGE DROP %	Cable cross section: 4G x ...mm2 + 3 x ...mm2									
							mm2	4	6	10	16	25	35	50	70	95
							A max*	73	94	130	173	220	274	333	426	516
							Maximum lenght in metres									
G8W300T386	30	40	380	0,83	78,0	4		-	57	105	169	260	361	500		
G8W300T406			460	0,83	64,4			55	88	158	251	385				
G8W370T386	37	50	380	0,83	96,1			-	-	81	134	208	290	403		
G8W370T406			460	0,83	79,4			-	67	124	201	309	429			
G8W450T386	45	60	380	0,85	114			-	-	64	107	169	237	332	456	
G8W450T406			460	0,85	94,3			-	52	99	162	252	352	491		
G8W520T386	52	70	380	0,83	134			-	-	-	90	143	203	285	391	
G8W520T406			460	0,83	110			-	-	83	138	216	303	422		
G8W550T386	55	75	380	0,85	139			-	-	-	84	134	191	269	371	
G8W550T406			460	0,85	115			-	-	77	128	203	285	399		
G8W600T386	60	80	380	0,85	149			-	-	-	77	124	177	250	345	487
G8W600T406			460	0,85	123			-	-	70	118	188	265	372		
G8W670T386	67	90	380	0,86	168			-	-	-	64	106	152	217	302	430
G8W670T406			460	0,86	139			-	-	-	100	161	229	324	447	
G8W750T386	75	100	380	0,85	187			-	-	-	-	94	136	195	272	389
G8W750T406			460	0,85	154			-	-	-	89	144	206	292	403	
G8W830T386	83	110	380	0,85	206			-	-	-	-	82	121	174	244	352
G8W830T406			460	0,85	170			-	-	-	77,6	127	184	261	363	
G8W930T386	93	125	380	0,87	231			-	-	-	-	69	103	150	213	313
G8W930T406			460	0,87	191			-	-	-	-	108	158	227	318	458

Exposed cable laid at a temperature of 30°C, maximum conductor temperature of 90°C

G8W_cavi-SD-60_a_te

*A max is the maximum rated current of the motor

SPLICE BETWEEN DROP CABLE AND MOTOR CABLE

MOTOR TYPE	POWER kW	TYPE OF SPLICE	FOUR-CORE DROP CABLE - SECTION (mm^2)												
			1,5	2,5	4	6	10	16	25	35	50	70	95	120	150
G4OS G4C	0,37 - 7,5	Resin-filled method	GR11	GR11	GR12	GR12	GR12	GR13	GR13	GR14	GR14	GR15	GR15	GR16	-
		Heat-shrink method	GT11	GT11	GT12	GT12	GT13	GT14	GT15	GT16	-	-	-	-	-
		Tape method	Self-vulcanizing tape + self-vulcanizing sealing putty and PVC tape (1)												
G6C G6W	4 - 37	Resin-filled method	-	-	GR12	GR12	GR12	GR13	GR13	GR14	GR14	GR15	GR15	GR16	-
		Heat-shrink method	-	-	GT12	GT12	GT13	GT14	GT15	GT16	-	-	-	-	-
		Tape method	Self-vulcanizing tape + self-vulcanizing sealing putty and PVC tape (1)												

MOTOR TYPE	POWER kW	TYPE OF SPLICE	THREE-CORE DROP CABLE - SECTION (mm^2)												
			1,5	2,5	4	6	10	16	25	35	50	70	95	120	150
G6C G6W	4 - 37	Resin-filled method	-	-	GR12	GR12	GR12	GR13	GR13	GR14	GR14	GR15	GR15	GR16	-
		Heat-shrink method	-	-	GT12	GT12	GT13	GT14	GT15	GT16	-	-	-	-	-
		Tape method	Self-vulcanizing tape + PVC tape												

MOTOR TYPE	POWER kW	TYPE OF SPLICE	SINGLE-CORE DROP CABLE - SECTION (mm^2)												
			1,5	2,5	4	6	10	16	25	35	50	70	95	120	150
G8W G10W G12W	30 - 300	Resin-filled method	-	-	-	GR12	GR12	GR17	GR17	GR17	GR18	GR18	GR18	GR19	GR19
		Heat-shrink method	-	-	-	-	-	-	-	-	-	-	-	-	-
		Tape method	Self-vulcanizing tape + PVC tape												

(1) Use self-vulcanizing sealing putty to fill in the gaps between the three-conductor cable and the ground cable in the area covered by the final layer of tape, to restore continuity to the protective sheath.

RESIN-FILLED SPLICES				HEAT-SHRINK SPLICES			
TYPE	L x D [mm]	TYPE	L x D [mm]	TYPE	L x D [mm]	TYPE	L x D [mm]
GR11	190 x 45	GR14	357 x 62	GT11	330	GT14	330
GR12	190 x 51	GR15	325 x 95	GT12	330	GT15	500
GR13	240 x 62	GR16	520 x 100	GT13	330	GT16	500

G-giunzioni-en_a_te

CALCULATING THE SPEED OF THE FLUID THAT FLOWS AROUND A SUBMERGED MOTOR AND SIZING OF THE COOLING SLEEVE

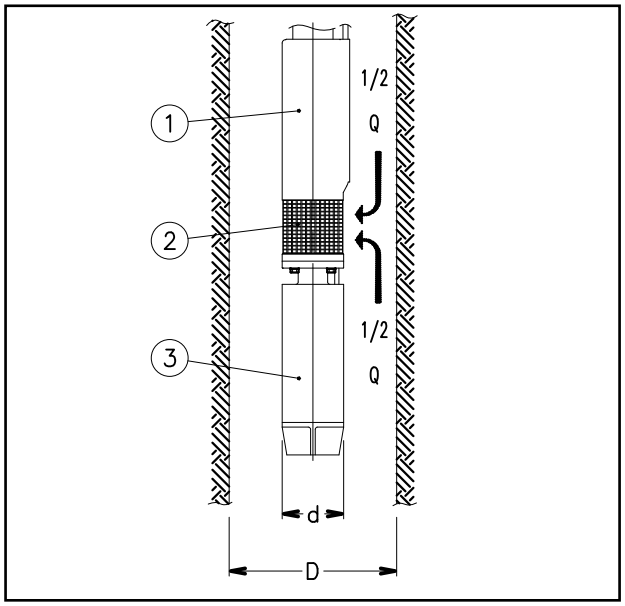

The following formula is used to verify whether the speed of the fluid that flows around the motor of a submersible pump is high enough to guarantee the proper cooling of the motor:

$$v = \frac{\frac{Q}{2}}{\pi \cdot (\frac{D^2}{4} - \frac{d^2}{4})}$$

Where:
- **-Q** in [m³/s] is the operating flow rate of the electric pump; only half of this flow is taken into account, because the fluid which is sucked into the area of the filter (2), comes from the motor side (3) as well as from the pump side (1);
- **-D** in [m] is the diameter of the well;
- **-d** in [m] is the diameter of the motor (3);
- **-v** in [m/s] is the calculated speed of the fluid that flows around the motor.

Now, compare the speed thus calculated (v) with the minimum speed required for correct cooling of the motor (v_m): if $v \geq v_m$ it means that the motor is properly cooled, if $v < v_m$ will be necessary to mount a cooling sleeve (4).

Example:
An electric pump O6GZ630/12
(motor diameter d = 0.144 m) operates in an 8" well (well diameter D = 0.203 m)
with flow rateQ = 20 m³/h = 0.0055 m³/s.
Speed of fluid v = (0.0055/2) / {π·[(0.203)²/4 – (0.144)²/4]} = 0.17 m/s.
The minimum speed required for proper motor cooling is v_m = 0.20 m/s.
Because $v < v_m$, it will be necessary to mount a cooling sleeve.

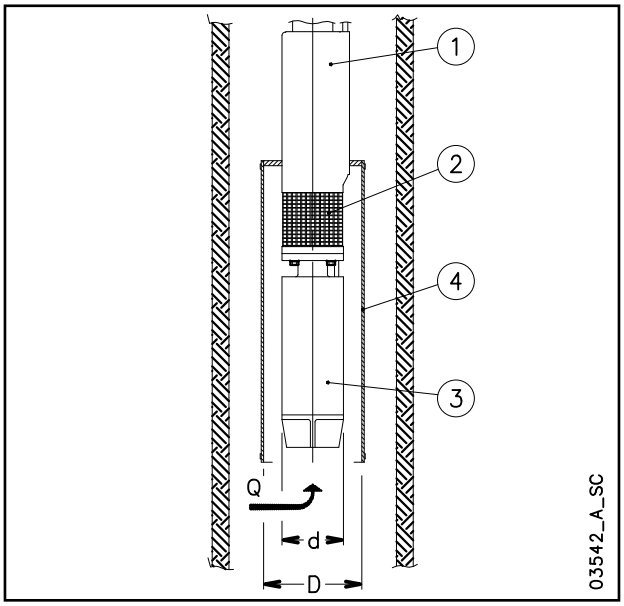

The following formula is used to determine the maximum diameter of a cooling sleeve to be mounted on a submersible motor:

$$D = \sqrt{4 \cdot \left(\frac{Q}{v \cdot \pi} + \frac{d^2}{4} \right)}$$

Where:
- **-Q** in [m³/s] is the operating flow rate of the electric pump; the entire flow is taken into account because the fluid comes from the motor side (3) only;
- **-D** in [m] corresponds to the diameter of the cooling sleeve (4);
- **-d** in [m] corresponds to the diameter of the motors(3);
- **-v_m** in [m/s] is the minimum speed of the fluid that flows around the motor.

If the electric pump operates at different flow rate, the minimum flow rate must be taken into account for calculating the diameter of the cooling sleeve.

Example:
A motor coupled to the electric pump 6GZ615/24 (motor diameter d = 0.144 m), which operates with flow rate Q = 15 m³/h = 0.0042 m³/s,
requires a minimum speed of the fluid of
v_m = 0.20 m/s.
Cooling sleeve diameter D = {4·[(0.0042/(0.2·π)+(0.144)²/4] }$^{0.5}$ = 0.217 m.

ASYNCHRONOUS MOTOR STARTING SYSTEMS

Direct

Suitable for low-power motors.
The starting current (Is) is much higher than the rated current (In).
Starting current Is = In x 4 ÷ 8
Starting torque Ts = Tn x 2 ÷ 3

Indirect

• Star/Delta

The starting current (Is) is three times less than the direct starting current.
Starting current Is = In x 1.3 ÷ 2.7
Starting torque Ts = Tn x 0.7 ÷ 1
In the star to delta changeover phase (approx. 70 ms) the motor is not supplied and tends to reduce its rotation speed.
In the case of submersible electric pumps with power above 10 HP, the modest mass of the rotor causes a slowdown at changeover, so that the initial Star supply phase is rendered partially useless.
In such cases we recommend using impedance panels or an autotransformer.

• Impedances

The motor is started with a voltage which is lower than the rated one, and which is obtained by means of impedances.
The Goulds panels use impedances which cut down to 70% the starting voltage.
The switch to the rated voltage takes place without any interruptions of the power supply.

Rated voltage Un = 400 V
Starting voltage Us = Un x 0,7 = 280 V

Starting current

$$Is = In \times 4 \div 8 \times \left(\frac{Us}{Un}\right) = In \times 3 \div 6$$

Starting torque

$$Ts = Tn \times 2 \div 3 \times \left(\frac{Us}{Un}\right)^2 = Tn \times 1 \div 1{,}5$$

Autotransformer

The pump is started with a voltage which is lower than the rated one.
The Goulds panels use an autotransformer with a voltage that is 70% the value of the line voltage.
The switch to the rated voltage occurs without any interruptions of the power supply.
Rated voltage Un = 400 V

Starting current

$$Is = In \times 4 \div 8 \times \left(\frac{Us}{Un}\right) = In \times 3 \div 6$$

Starting torque

$$Ts = Tn \times 2 \div 3 \times \left(\frac{Us}{Un}\right)^2 = Tn \times 1 \div 1{,}5$$

DIAGRAM OF STARTING INPUTS

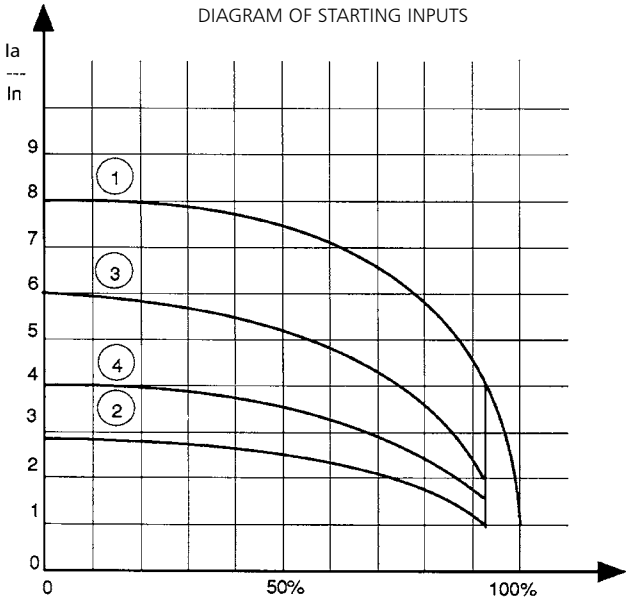

1 = Direct
2 = Star-Delta
3 = Impedances
4 = Autotransformer

WATER REQUIREMENTS IN CIVIL USERS

Determination of the water requirement depends on the type of users and contemporaneity factor.
The calculation may be subject to regulations, standards or customs that may vary from country to country.
The calculation method shown below is an example based on practical experience, designed to provide a reference value and not a substitutefor detailed analytical calculation.

Water requirements in condominiums.

The **consumption table** shows the maximum values for each delivery point, depending on the plumbing amenities.

MAXIMUM CONSUMPTION FOR EACH DELIVERY POINT

TYPE	CONSUMPTION (l/min)
Sink	9
Dishwasher	10
Washing machine	12
Shower	12
Bathtub	15
Washbasin	6
Bidet	6
Flush tank WC	6
Controlled flushing system WC	90

The **sum of the water consumption values** of each delivery point determines the maximum theoretical requirement, which must be reduced according to the **contemporaneity coefficient,** because in actual fact the delivery points are never used all together.

$$f = \frac{1}{\sqrt{(0{,}857 \times Nr \times Na)}}$$ Coefficient for apartments with one bathroom and flush tank WC

$$f = \frac{1}{\sqrt{(0{,}857 \times Nr \times Na)}}$$ Coefficient for apartments with one bathroom and controlled flushing system WC

$$f = \frac{1{,}03}{\sqrt{(0{,}545 \times Nr \times Na)}}$$ Coefficient for apartments with two bathrooms and flush tank WC

$$f = \frac{0{,}8}{\sqrt{(0{,}727 \times Nr \times Na)}}$$ Coefficient for apartments with two bathrooms and controlled flushing system WC

f= coefficient; Nr= number of delivery points; Na= number of apartments

The **table of water requirements in civil users** shows the maximum contemporaneity flow-rate values based on the **number of apartments** and the type of WC for apartments with one bathroom and two bathrooms. As regards apartments with one bathroom, 7 drawing points have been taken into consideration, while 11 points have been considered for apartments with two bathrooms. If the number of drawing points or apartments is different, use the formulas to **calculate** the requirement.

TABLE OF WATER REQUIREMENTS IN CIVIL USERS

NUMBER OF APARTMENTS	WITH FLUSH TANK WC		WITH CONTROLLED FLUSHING SYSTEM WC	
	1	2	1	2
	FLOW RATE (l/min)			
1	32	40	60	79
2	45	56	85	111
3	55	68	105	136
4	63	79	121	157
5	71	88	135	176
6	78	97	148	193
7	84	105	160	208
8	90	112	171	223
9	95	119	181	236
10	100	125	191	249
11	105	131	200	261
12	110	137	209	273
13	114	143	218	284
14	119	148	226	295
15	123	153	234	305
16	127	158	242	315
17	131	163	249	325
18	134	168	256	334
19	138	172	263	343
20	142	177	270	352
21	145	181	277	361
22	149	185	283	369
23	152	190	290	378
24	155	194	296	386
25	158	198	302	394
26	162	202	308	401
27	165	205	314	409
28	168	209	320	417
29	171	213	325	424
30	174	217	331	431
35	187	234	357	466
40	200	250	382	498
45	213	265	405	528
50	224	280	427	557
55	235	293	448	584
60	245	306	468	610
65	255	319	487	635
70	265	331	506	659
75	274	342	523	682
80	283	354	540	704
85	292	364	557	726
90	301	375	573	747
95	309	385	589	767
100	317	395	604	787
120	347	433	662	863
140	375	468	715	932
160	401	500	764	996
180	425	530	811	1056
200	448	559	854	1114

For seaside resorts, a flow rate increased by at least 20% must be considered.

G-at-fi-en_a_th

WATER REQUIREMENTS FOR COMMUNITY BUILDINGS

The requirements of buildings intended for specific uses, such as **offices, residential units, hotels, department stores, nursing homes** and so on, are different from those of condominiums, and both their global daily water consumption and the maximum contemporaneity flow rate are usually greater.
The **diagram of water requirements for community buildings** shows the maximum contemporaneity flow rate of some types of communities, for guidance.
These requirements must be determined case by case with the utmost accuracy, using analytical calculation methods,according to particular needs and local provisions.

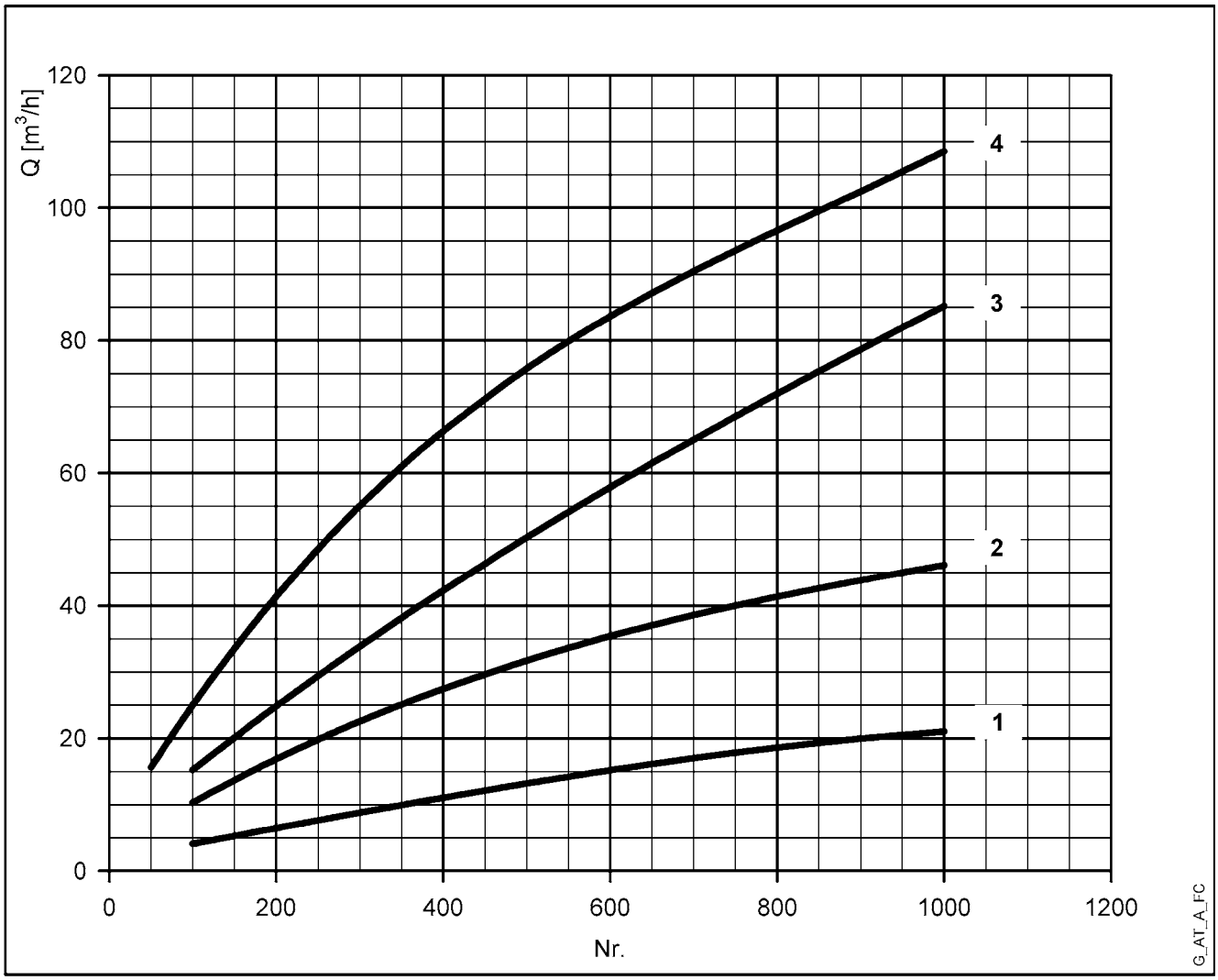

For seaside resorts, the flow rate must be increased by at least 20%.
1= Offices (N. of people)
2= Department stores (N. of people)
3= Nursing homes (N. of beds)
4= Hotels, residences (N. of beds)

NPSH

The minimum operating values that can be reached at the pump suction end are limited by the onset of cavitation.

Cavitation is the formation of vapour-filled cavities within liquids where the pressure is locally reduced to a critical value, or where the local pressure is equal to, or just below the vapour pressure of the liquid.

The vapour-filled cavities flow with the current and when they reach a higher pressure area the vapour contained in the cavities condenses. The cavities collide, generating pressure waves that are transmitted to the walls. These, being subjected to stress cycles, gradually become deformed and yield due to fatigue. This phenomenon, characterized by a metallic noise produced by the hammering on the pipe walls, is called incipient cavitation.

The damage caused by cavitation may be magnified by electrochemical corrosion and a local rise in temperature due to the plastic deformation of the walls. The materials that offer the highest resistance to heat and corrosion are alloy steels, especially austenitic steel. The conditions that trigger cavitation may be assessed by calculating the total net suction head, referred to in technical literature with the acronym NPSH (Net Positive Suction Head).

The NPSH represents the total energy (expressed in m.) of the liquid measured at suction under conditions of incipient cavitation, excluding the vapour pressure (expressed in m.) that the liquid has at the pump inlet.

To find the static height hz at which to install the machine under safe conditions, the following formula must be verified:

hp + hz ≥ **(NPSHr + 0.5) + hf + hpv** ①

where:

hp is the absolute pressure applied to the free liquid surface in the suction tank, expressed in m. of liquid; hp is the quotient between the barometric pressure and the specific weight of the liquid.

hz is the suction lift between the pump axis and the free liquid surface in the suction tank, expressed in m.; hz is negative when the liquid level is lower than the pump axis.

hf is the flow resistance in the suction line and its accessories, such as: fittings, foot valve, gate valve, elbows, etc.

hpv is the vapour pressure of the liquid at the operating temperature, expressed in m. of liquid. hpv is the quotient between the Pv vapour pressure and the liquid's specific weight.

0,5 is the safety factor.

The maximum possible suction head for installation depends on the value of the atmospheric pressure (i.e. the elevation above sea level at which the pump is installed) and the temperature of the liquid.

To help the user, with reference to water temperature (4° C) and to the elevation above sea level, the following tables show the drop in hydraulic pressure head in relation to the elevation above sea level, and the suction loss in relation to temperature.

Water temperature (°C)	20	40	60	80	90	110	120
Suction loss (m)	0,2	0,7	2,0	5,0	7,4	15,4	21,5

Elevation above sea level (m)	500	1000	1500	2000	2500	3000
Suction loss (m)	0,55	1,1	1,65	2,2	2,75	3,3

Friction loss is shown in this catalogue.
To reduce it to a minimum, especially in cases of high suction head (over 4-5 m.) or within the operating limits with high flow rates, we recommend using a suction line having a larger diameter than that of the pump's suction port.
It is always a good idea to position the pump as close as possible to the liquid to be pumped.

Make the following calculation:

Liquid: water at ~15°C γ = 1 kg/dm^3
Flow rate required: 30 m^3/h
Head for required delivery: 43 m.
Suction lift: 3,5 m.
The selection is an FHE 40-200/75 pump whose NPSH required value is, at 30 m^3/h, di 2,5 m.

For water at 15 °C

hp = Pa / γ = 10,33m, hpv = Pv / γ = 0,174m (0,01701 bar)

The Hf flow resistance in the suction line with foot valves is ~ 1,2 m.
By substituting the parameters in formula with the numeric values above, we have:

10,33 + (-3,5) ≥ (2,5 + 0,5) + 1,2 + 0,17

from which we have: 6,8 > 4,4

The relation is therefore verified.

TECHNICAL APPENDIX VAPOUR PRESSURE ps VAPOUR PRESSURE AND ρ DENSITY OF WATER TABLE

t	T	ps	ρ
°C	K	bar	kg/dm³
0	273,15	0,00611	0,9998
1	274,15	0,00657	0,9999
2	275,15	0,00706	0,9999
3	276,15	0,00758	0,9999
4	277,15	0,00813	1,0000
5	278,15	0,00872	1,0000
6	279,15	0,00935	1,0000
7	280,15	0,01001	0,9999
8	281,15	0,01072	0,9999
9	282,15	0,01147	0,9998
10	283,15	0,01227	0,9997
11	284,15	0,01312	0,9997
12	285,15	0,01401	0,9996
13	286,15	0,01497	0,9994
14	287,15	0,01597	0,9993
15	288,15	0,01704	0,9992
16	289,15	0,01817	0,9990
17	290,15	0,01936	0,9988
18	291,15	0,02062	0,9987
19	292,15	0,02196	0,9985
20	293,15	0,02337	0,9983
21	294,15	0,24850	0,9981
22	295,15	0,02642	0,9978
23	296,15	0,02808	0,9976
24	297,15	0,02982	0,9974
25	298,15	0,03166	0,9971
26	299,15	0,03360	0,9968
27	300,15	0,03564	0,9966
28	301,15	0,03778	0,9963
29	302,15	0,04004	0,9960
30	303,15	0,04241	0,9957
31	304,15	0,04491	0,9954
32	305,15	0,04753	0,9951
33	306,15	0,05029	0,9947
34	307,15	0,05318	0,9944
35	308,15	0,05622	0,9940
36	309,15	0,05940	0,9937
37	310,15	0,06274	0,9933
38	311,15	0,06624	0,9930
39	312,15	0,06991	0,9927
40	313,15	0,07375	0,9923
41	314,15	0,07777	0,9919
42	315,15	0,08198	0,9915
43	316,15	0,09639	0,9911
44	317,15	0,09100	0,9907
45	318,15	0,09582	0,9902
46	319,15	0,10086	0,9898
47	320,15	0,10612	0,9894
48	321,15	0,11162	0,9889
49	322,15	0,11736	0,9884
50	323,15	0,12335	0,9880
51	324,15	0,12961	0,9876
52	325,15	0,13613	0,9871
53	326,15	0,14293	0,9862
54	327,15	0,15002	0,9862

t	T	ps	ρ
°C	K	bar	kg/dm³
55	328,15	0,15741	0,9857
56	329,15	0,16511	0,9852
57	330,15	0,17313	0,9846
58	331,15	0,18147	0,9842
59	332,15	0,19016	0,9837
60	333,15	0,1992	0,9832
61	334,15	0,2086	0,9826
62	335,15	0,2184	0,9821
63	336,15	0,2286	0,9816
64	337,15	0,2391	0,9811
65	338,15	0,2501	0,9805
66	339,15	0,2615	0,9799
67	340,15	0,2733	0,9793
68	341,15	0,2856	0,9788
69	342,15	0,2984	0,9782
70	343,15	0,3116	0,9777
71	344,15	0,3253	0,9770
72	345,15	0,3396	0,9765
73	346,15	0,3543	0,9760
74	347,15	0,3696	0,9753
75	348,15	0,3855	0,9748
76	349,15	0,4019	0,9741
77	350,15	0,4189	0,9735
78	351,15	0,4365	0,9729
79	352,15	0,4547	0,9723
80	353,15	0,4736	0,9716
81	354,15	0,4931	0,9710
82	355,15	0,5133	0,9704
83	356,15	0,5342	0,9697
84	357,15	0,5557	0,9691
85	358,15	0,5780	0,9684
86	359,15	0,6011	0,9678
87	360,15	0,6249	0,9671
88	361,15	0,6495	0,9665
89	362,15	0,6749	0,9658
90	363,15	0,7011	0,9652
91	364,15	0,7281	0,9644
92	365,15	0,7561	0,9638
93	366,15	0,7849	0,9630
94	367,15	0,8146	0,9624
95	368,15	0,8453	0,9616
96	369,15	0,8769	0,9610
97	370,15	0,9094	0,9602
98	371,15	0,9430	0,9596
99	372,15	0,9776	0,9586
100	373,15	1,0133	0,9581
102	375,15	1,0878	0,9567
104	377,15	1,1668	0,9552
106	379,15	1,2504	0,9537
108	381,15	1,3390	0,9522
110	383,15	1,4327	0,9507
112	385,15	1,5316	0,9491
114	387,15	1,6362	0,9476
116	389,15	1,7465	0,9460
118	391,15	1,8628	0,9445

t	T	ps	ρ
°C	K	bar	kg/dm³
120	393,15	1,9854	0,9429
122	395,15	2,1145	0,9412
124	397,15	2,2504	0,9396
126	399,15	2,3933	0,9379
128	401,15	2,5435	0,9362
130	403,15	2,7013	0,9346
132	405,15	2,867	0,9328
134	407,15	3,041	0,9311
136	409,15	3,223	0,9294
138	411,15	3,414	0,9276
140	413,15	3,614	0,9258
145	418,15	4,155	0,9214
155	428,15	5,433	0,9121
160	433,15	6,181	0,9073
165	438,15	7,008	0,9024
170	433,15	7,920	0,8973
175	448,15	8,924	0,8921
180	453,15	10,027	0,8869
185	458,15	11,233	0,8815
190	463,15	12,551	0,8760
195	468,15	13,987	0,8704
200	473,15	15,550	0,8647
205	478,15	17,243	0,8588
210	483,15	19,077	0,8528
215	488,15	21,060	0,8467
220	493,15	23,198	0,8403
225	498,15	25,501	0,8339
230	503,15	27,976	0,8273
235	508,15	30,632	0,8205
240	513,15	33,478	0,8136
245	518,15	36,523	0,8065
250	523,15	39,776	0,7992
255	528,15	43,246	0,7916
260	533,15	46,943	0,7839
265	538,15	50,877	0,7759
270	543,15	55,058	0,7678
275	548,15	59,496	0,7593
280	553,15	64,202	0,7505
285	558,15	69,186	0,7415
290	563,15	74,461	0,7321
295	568,15	80,037	0,7223
300	573,15	85,927	0,7122
305	578,15	92,144	0,7017
310	583,15	98,70	0,6906
315	588,15	105,61	0,6791
320	593,15	112,89	0,6669
325	598,15	120,56	0,6541
330	603,15	128,63	0,6404
340	613,15	146,05	0,6102
350	623,15	165,35	0,5743
360	633,15	186,75	0,5275
370	643,15	210,54	0,4518
374,15	647,30	221,20	0,3154

G-at_npsh_b_sc

TABLE OF FLOW RESISTANCE IN 100 m OF STRAIGHT CAST IRON PIPELINE (HAZEN-WILLIAMS FORMULA C=100)

FLOW RATE			NOMINAL DIAMETER in mm and inches															
m^3/h	l/min		15 1/2"	20 3/4"	25 1"	32 1 1/4"	40 1 1/2"	50 2	65 2 1/2"	80 3"	100 4"	125 5"	150 6"	175 7"	200 8"	250 10"	300 12"	350 14"	400 16"
0,6	10	v	0,94	0,53	0,34	0,21	0,13												
		hr	16	3,94	1,33	0,40	0,13												
0,9	15	v	1,42	0,80	0,51	0,31	0,20												
		hr	33,9	8,35	2,82	0,85	0,29												
1,2	20	v	1,89	1,06	0,68	0,41	0,27	0,17											
		hr	57,7	14,21	4,79	1,44	0,49	0,16											
1,5	25	v	2,36	1,33	0,85	0,52	0,33	0,21											
		hr	87,2	21,5	7,24	2,18	0,73	0,25											
1,8	30	v	2,83	1,59	1,02	0,62	0,40	0,25											
		hr	122	30,1	10,1	3,05	1,03	0,35											
2,1	35	v	3,30	1,86	1,19	0,73	0,46	0,30											
		hr	162	40,0	13,5	4,06	1,37	0,46											
2,4	40	v		2,12	1,36	0,83	0,53	0,34	0,20										
		hr		51,2	17,3	5,19	1,75	0,59	0,16										
3	50	v		2,65	1,70	1,04	0,66	0,42	0,25										
		hr		77,4	26,1	7,85	2,65	0,89	0,25										
3,6	60	v		3,18	2,04	1,24	0,80	0,51	0,30										
		hr		108	36,6	11,0	3,71	1,25	0,35										
4,2	70	v		3,72	2,38	1,45	0,93	0,59	0,35										
		hr		144	48,7	14,6	4,93	1,66	0,46										
4,8	80	v		4,25	2,72	1,66	1,06	0,68	0,40										
		hr		185	62,3	18,7	6,32	2,13	0,59										
5,4	90	v			3,06	1,87	1,19	0,76	0,45	0,30									
		hr			77,5	23,3	7,85	2,65	0,74	0,27									
6	100	v			3,40	2,07	1,33	0,85	0,50	0,33									
		hr			94,1	28,3	9,54	3,22	0,90	0,33									
7,5	125	v			4,25	2,59	1,66	1,06	0,63	0,41									
		hr			142	42,8	14,4	4,86	1,36	0,49									
9	150	v				3,11	1,99	1,27	0,75	0,50	0,32								
		hr				59,9	20,2	6,82	1,90	0,69	0,23								
10,5	175	v				3,63	2,32	1,49	0,88	0,58	0,37								
		hr				79,7	26,9	9,07	2,53	0,92	0,31								
12	200	v				4,15	2,65	1,70	1,01	0,66	0,42								
		hr				102	34,4	11,6	3,23	1,18	0,40								
15	250	v				5,18	3,32	2,12	1,26	0,83	0,53	0,34							
		hr				154	52,0	17,5	4,89	1,78	0,60	0,20							
18	300	v					3,98	2,55	1,51	1,00	0,64	0,41							
		hr					72,8	24,6	6,85	2,49	0,84	0,28							
24	400	v					5,31	3,40	2,01	1,33	0,85	0,54	0,38						
		hr					124	41,8	11,66	4,24	1,43	0,48	0,20						
30	500	v					6,63	4,25	2,51	1,66	1,06	0,68	0,47						
		hr					187	63,2	17,6	6,41	2,16	0,73	0,30						
36	600	v						5,10	3,02	1,99	1,27	0,82	0,57	0,42					
		hr						88,6	24,7	8,98	3,03	1,02	0,42	0,20					
42	700	v						5,94	3,52	2,32	1,49	0,95	0,66	0,49					
		hr						118	32,8	11,9	4,03	1,36	0,56	0,26					
48	800	v						6,79	4,02	2,65	1,70	1,09	0,75	0,55					
		hr						151	42,0	15,3	5,16	1,74	0,72	0,34					
54	900	v						7,64	4,52	2,99	1,91	1,22	0,85	0,62					
		hr						188	52,3	19,0	6,41	2,16	0,89	0,42					
60	1000	v							5,03	3,32	2,12	1,36	0,94	0,69	0,53				
		hr							63,5	23,1	7,79	2,63	1,08	0,51	0,27				
75	1250	v							6,28	4,15	2,65	1,70	1,18	0,87	0,66				
		hr							96,0	34,9	11,8	3,97	1,63	0,77	0,40				
90	1500	v							7,54	4,98	3,18	2,04	1,42	1,04	0,80				
		hr							134	48,9	16,5	5,57	2,29	1,08	0,56				
105	1750	v							8,79	5,81	3,72	2,38	1,65	1,21	0,93				
		hr							179	65,1	21,9	7,40	3,05	1,44	0,75				
120	2000	v								6,63	4,25	2,72	1,89	1,39	1,06	0,68			
		hr								83,3	28,1	9,48	3,90	1,84	0,96	0,32			
150	2500	v								8,29	5,31	3,40	2,36	1,73	1,33	0,85			
		hr								126	42,5	14,3	5,89	2,78	1,45	0,49			
180	3000	v									6,37	4,08	2,83	2,08	1,59	1,02	0,71		
		hr									59,5	20,1	8,26	3,90	2,03	0,69	0,28		
210	3500	v									7,43	4,76	3,30	2,43	1,86	1,19	0,83		
		hr									79,1	26,7	11,0	5,18	2,71	0,91	0,38		
240	4000	v									8,49	5,44	3,77	2,77	2,12	1,36	0,94		
		hr									101	34,2	14,1	6,64	3,46	1,17	0,48		
300	5000	v										6,79	4,72	3,47	2,65	1,70	1,18		
		hr										51,6	21,2	10,0	5,23	1,77	0,73		
360	6000	v										8,15	5,66	4,16	3,18	2,04	1,42		
		hr										72,3	29,8	14,1	7,33	2,47	1,02		
420	7000	v											6,61	4,85	3,72	2,38	1,65	1,21	
		hr											39,6	18,7	9,75	3,29	1,35	0,64	
480	8000	v											7,55	5,55	4,25	2,72	1,89	1,39	
		hr											50,7	23,9	12,49	4,21	1,73	0,82	
540	9000	v											8,49	6,24	4,78	3,06	2,12	1,56	1,19
		hr											63,0	29,8	15,5	5,24	2,16	1,02	0,53
600	10000	v												6,93	5,31	3,40	2,36	1,73	1,33
		hr												36,2	18,9	6,36	2,62	1,24	0,65

The hr values must be multiplied by:

0,71 for galvanized or painted steel pipes

0,54 for stainless steel or copper pipes

0,47 for PVC or PE pipes

hr = flow resistance for 100 m of straight pipeline (m)

V = water speed (m/s)

G-at-pct-en_b_th

FLOW RESISTANCE

TABLE OF FLOW RESISTANCE IN BENDS, VALVES AND GATES

The flow resistance is calculated using the equivalent pipeline length method according to the table below:

ACCESSORY TYPE	DN											
	25	32	40	50	65	80	100	125	150	200	250	300
	Equivalent pipeline length (m)											
45° bend	0,2	0,2	0,4	0,4	0,6	0,6	0,9	1,1	1,5	1,9	2,4	2,8
90° bend	0,4	0,6	0,9	1,1	1,3	1,5	2,1	2,6	3,0	3,9	4,7	5,8
90° smooth bend	0,4	0,4	0,4	0,6	0,9	1,1	1,3	1,7	1,9	2,8	3,4	3,9
Union tee or cross	1,1	1,3	1,7	2,1	2,6	3,2	4,3	5,3	6,4	7,5	10,7	12,8
Gate valve	-	-	-	0,2	0,2	0,2	0,4	0,4	0,6	0,9	1,1	1,3
Foot check valve	1,1	1,5	1,9	2,4	3,0	3,4	4,7	5,9	7,4	9,6	11,8	13,9
Non return valve	1,1	1,5	1,9	2,4	3,0	3,4	4,7	5,9	7,4	9,6	11,8	13,9

G-a-pcv-en_b_th

The table is valid for the Hazen Williams coefficient C = 100 (cast iron pipework). For steel pipework, multiply the values by 1.41. For stainless steel, copper and coated cast iron pipework, multiply the values by 1.85.
When the **equivalent pipeline length** has been determined, the flow resistance is obtained from the table of flow resistance.
The values given are guideline values which are bound to vary slightly according to the model, especially for gate valves and non-return valves, for which it is a good idea to check the values supplied by the manufacturers.

VOLUMETRIC CAPACITY

Litres per minute l/min	Cubic metres per hour m^3/h	Cubic feet per hour ft^3/h	Cubic feet per minute ft^3/min	Imperial gallon per minute Imp. gal/min	U.S. gallon per minute US gal/min
1,0000	0,0600	2,1189	0,0353	0,2200	0,2642
16,6667	**1,0000**	35,3147	0,5886	3,6662	4,4029
0,4719	0,0283	**1,0000**	0,0167	0,1038	0,1247
28,3168	1,6990	60,0000	**1,0000**	6,2288	7,4805
4,5461	0,2728	9,6326	0,1605	**1,0000**	1,2009
3,7854	0,2271	8,0208	0,1337	0,8327	**1,0000**

PRESSURE AND HEAD

Newton per square metre N/m^2	kilo Pascal kPa	bar bar	Pound force per square inch psi	Metre of water m H_2O	Millimetre of mercury mm Hg
1,0000	0,0010	1×10^{-5}	$1,45 \times 10^{-4}$	$1,02 \times 10^{-4}$	0,0075
1 000,0000	**1,0000**	0,0100	0,1450	0,1020	7,5006
1×10^5	100,0000	**1,0000**	14,5038	10,1972	750,0638
6 894,7570	6,8948	0,0689	**1,0000**	0,7031	51,7151
9 806,6500	9,8067	0,0981	1,4223	**1,0000**	73,5561
133,3220	0,1333	0,0013	0,0193	0,0136	**1,0000**

LENGTH

Millimetre mm	Centimetre cm	Metre m	Inch in	Foot ft	Yard yd
1,0000	0,1000	0,0010	0,0394	0,0033	0,0011
10,0000	**1,0000**	0,0100	0,3937	0,0328	0,0109
1 000,0000	100,0000	**1,0000**	39,3701	3,2808	1,0936
25,4000	2,5400	0,0254	**1,0000**	0,0833	0,0278
304,8000	30,4800	0,3048	12,0000	**1,0000**	0,3333
914,4000	91,4400	0,9144	36,0000	3,0000	**1,0000**

VOLUME

Cubic metre m^3	Litre L	Millilitre ml	Imperial gallon imp. gal.	U.S. gallon US gal.	Cubic foot ft^3
1,0000	1 000,0000	1×10^6	219,9694	264,1720	35,3147
0,0010	**1,0000**	1 000,0000	0,2200	0,2642	0,0353
1×10^{-6}	0,0010	**1,0000**	$2,2 \times 10^{-4}$	$2,642 \times 10^{-4}$	$3,53 \times 10^{-5}$
0,0045	4,5461	4 546,0870	**1,0000**	1,2009	0,1605
0,0038	3,7854	3 785,4120	0,8327	**1,0000**	0,1337
0,0283	28,3168	28 316,8466	6,2288	7,4805	**1,0000**

TEMPERATURE

Water	Kelvin K	Celsius °C	Fahrenheit °F	$°F = °C \times \frac{9}{5} + 32$ $°C = (°F - 32) \times \frac{5}{9}$
icing	273,1500	0,0000	32,0000	
boiling	373,1500	100,0000	212,0000	

G-at_pp-en_b_sc

FURTHER PRODUCT SELECTION AND DOCUMENTATION
Xylect™

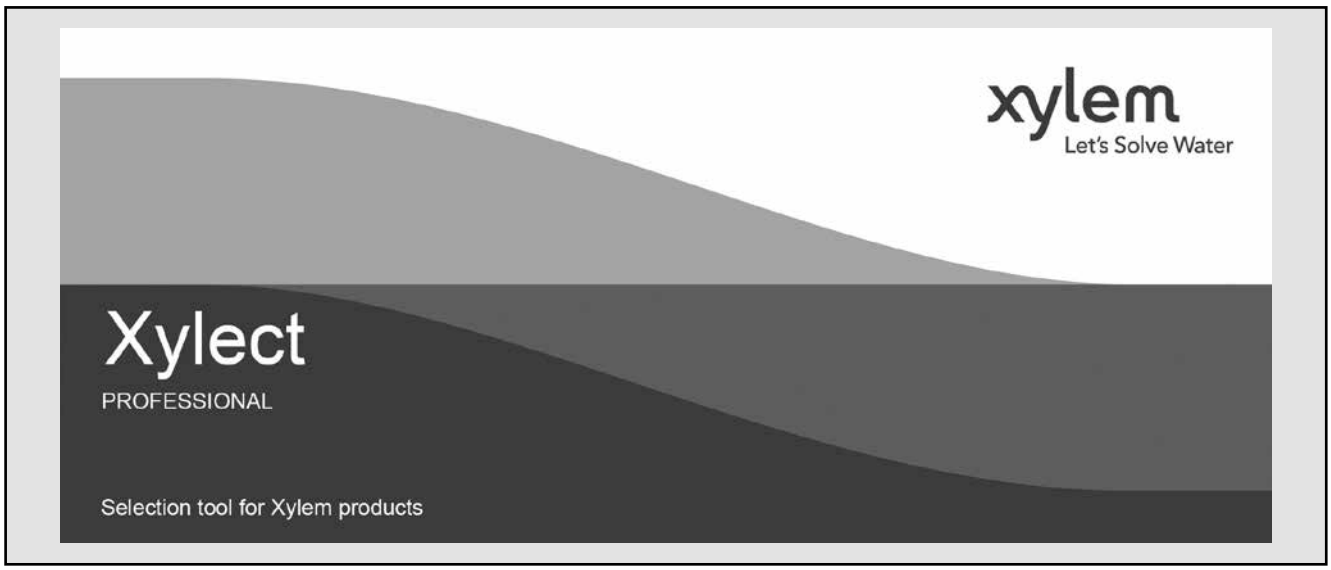

Xylect™ is pump solution selection software with an extensive online database of product information across the entire Goulds range of pumps and related products, with multiple search options and helpful project management facilities. The system holds up-to-date product information on thousands of products and accessories.

The possibility to search by applications and the detailed information output given makes it easy to make the optimal selection without having detailed knowledge about the Goulds products.

The search can be made by:

- Application
- Product type
- Duty point

Xylect™ gives a detailed output:

- List with search results
- Performance curves (flow, head, power, efficiency, NPSH)
- Motor data
- Dimensional drawings
- Options
- Data sheet printouts
- Document downloads incl dxf files

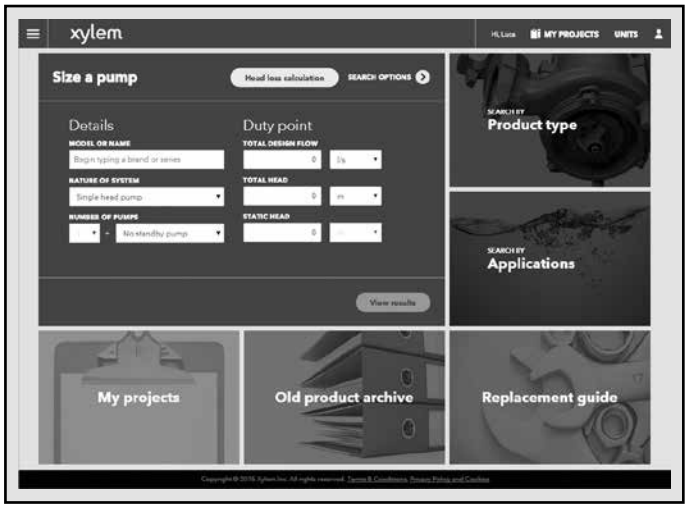

The search by application guides users not familiar with the product range to the right choice.

FURTHER PRODUCT SELECTION AND DOCUMENTATION

Xylect™



The detailed output makes it easy to select the optimal pump from the given alternatives.

The best way to work with Xylect is to create a personal account. This makes it possible to:

- Set own standard units
- Create and save projects
- Share projects with other Xylect users

Every registered user has a proper space, where all projects are saved.

For more information about Xylect please contact our sales network or visit www.xylect.com.

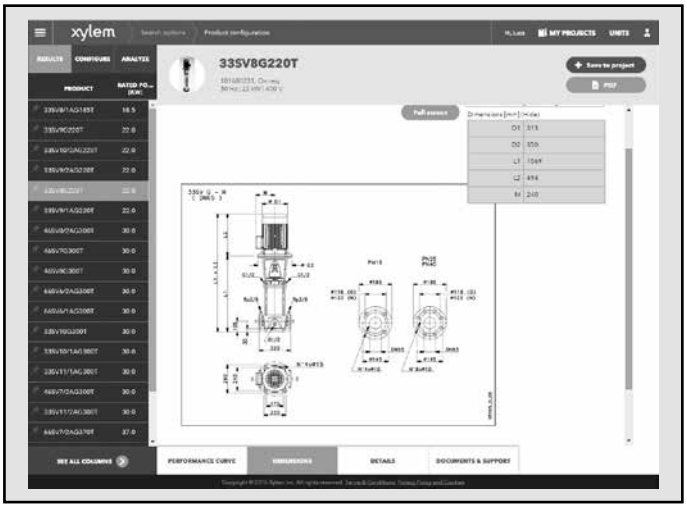

Dimensional drawings appear on the screen and can be downloaded in dxf format.

Xylem |'zīləm|

1) The tissue in plants that brings water upward from the roots;
2) a leading global water technology company.

We're a global team unified in a common purpose: creating advanced technology solutions to the world's water challenges. Developing new technologies that will improve the way water is used, conserved, and re-used in the future is central to our work. Our products and services move, treat, analyze, monitor and return water to the environment, in public utility, industrial, residential and commercial building services, and agricultural settings. With its October 2016 acquisition of Sensus, Xylem added smart metering, network technologies and advanced data analytics for water, gas and electric utilities to its portfolio of solutions. In more than 150 countries, we have strong, long-standing relationships with customers who know us for our powerful combination of leading product brands and applications expertise with a strong focus on developing comprehensive, sustainable solutions.

For more information on how Xylem can help you, go to www.xylem.com.

GOULDS
WATER TECHNOLOGY

xylem
Let's Solve Water

Sales office:
Xylem Water Solutions
Middle East Region FZCO
Plot S20120, Jebel Ali Free Zone South
P.O. Box 262678, Dubai
United Arab Emirates
Phone: +971 4 806 1103
Fax: +971 4 880 6045
Email: info.uae@xyleminc.com
middleeast.xylemappliedwater.com/gwt

For information and
technical support:
Xylem Service Italia Srl
Via Dottor Vittorio Lombardi 14
36075 - Montecchio Maggiore (VI)
Italy
Tel. (+39) 0444 707111
Fax (+39) 0444 491043

We reserve the right to make modification without prior notice.
Xylem is a trademark of Xylem Inc. or one of its subsidiaries. Goulds is a registered trademark of Goulds Pumps, Inc. and is used under license.
© 2017 Xylem, Inc.