GOULDS WATER TECHNOLOGY
xylem

Technical brochure
BPV R6



PV

Submersible vortex sewage pump

xylem

Description

The PV Series is a compact cast iron sewage pump featuring a vortex impeller. This pump comes with a 20’ (6.1 m) cord and piggyback float switch as standard. It features a 2” NPT discharge and offers 2” (50.8 mm) solids handling. This “Complete. Reliable. Blue.” pump is ideal for residential sewage systems and heavy sump applications.

Features

- Corrosion resistant construction
- Cast iron body
- Thermoplastic impeller and cover
- Upper sleeve and lower heavy duty ball bearing construction
- Motor is permanently lubricated for extended service life
- Powered for continuous operation when fully submerged
- Vortex impeller is recessed to allow free flow through casing
- All ratings are within the working limits of the motor
- Heavy duty 20' (6.1m) length SJTW power cords with 115V NEMA ground plug
- Complete unit is heavy duty, portable and compact
- Mechanical seal is carbon, ceramic, BUNA and stainless steel
- Stainless steel fasteners
- Three (3) year standard warranty/(four (4) year GPDA)

Applications

Specially designed for the following uses:



Residential **Heavy duty sump/dewatering** **Water transfer**

Specifications

Pump

- **Discharge:** 2" NPT
- **Maximum capacity:** 100 GPM (22.71 m³/hr)
- **Maximum head:** 22' TDH (6.7m)
- **Impeller:** Vortex
- **Solids handling:** 2" (50.8mm) maximum sphere
- **Temperature:** 104º F (40º C) maximum, continuous when fully submerged
- **Float switch:** Piggyback, wide angle (included)
- **Pumping range:** see performance chart or curve

Motor

- Single-phase
- 60 Hertz
- 115 Volt
- Built-in thermal overload protection with automatic reset
- Class B insulation
- Oil-filled design
- High strength carbon steel shaft
- 0.5 HP, 3400 RPM
- PSC design

Agency listings

Tested to UL 778 and CSA 22.2 108 Standards
By Canadian Standards Association
File #LR38549

Model information

Order no.	HP	Volts	Max. amps	Minimum circuit breaker amps	Phase	RPM	Float switch style	Power cord length ft. (m.)	Discharge connection in. (mm.)	Maximum solids size in. (mm.)	Minimum basin diameter in. (mm.)	Shipping weight lbs. (kgs.)
PV51P1F	0.5	115	13.0	20	1	3400	Piggyback wide angle	20' (6.1)	2” (50.8)	2" (50.8)	18" (457.2)	44 (20)

Performance charts

These charts show actual system performance with friction loss factored in for various discharge pipe lengths. Calculations and performance based on a system with 2" PVC, schedule 40 plastic pipe (C150), (4) 90º elbows, (1) check valve and (1) shut-off valve. Wastewater requires a minimum scouring velocity of 21 gpm for 2" pipe. Shaded areas do not provide minimum scouring velocity - use only for gray water with no solids.

Pipe length (Feet)	GPM Vertical head (Feet)									
	2	4	6	8	10	12	14	16	18	20
25	95	89	83	77	70	62	53	45	35	22
50	83	78	73	67	61	55	48	40	31	20
75	76	71	66	61	55	50	43	37	28	18
100	69	65	61	56	51	46	40	33	26	17
150	60	57	53	49	45	40	35	29	23	16
200	54	51	48	44	40	36	32	27	21	14
250	49	47	44	40	37	33	29	24	19	13
300	46	43	40	37	34	31	27	23	18	12

Performance curve

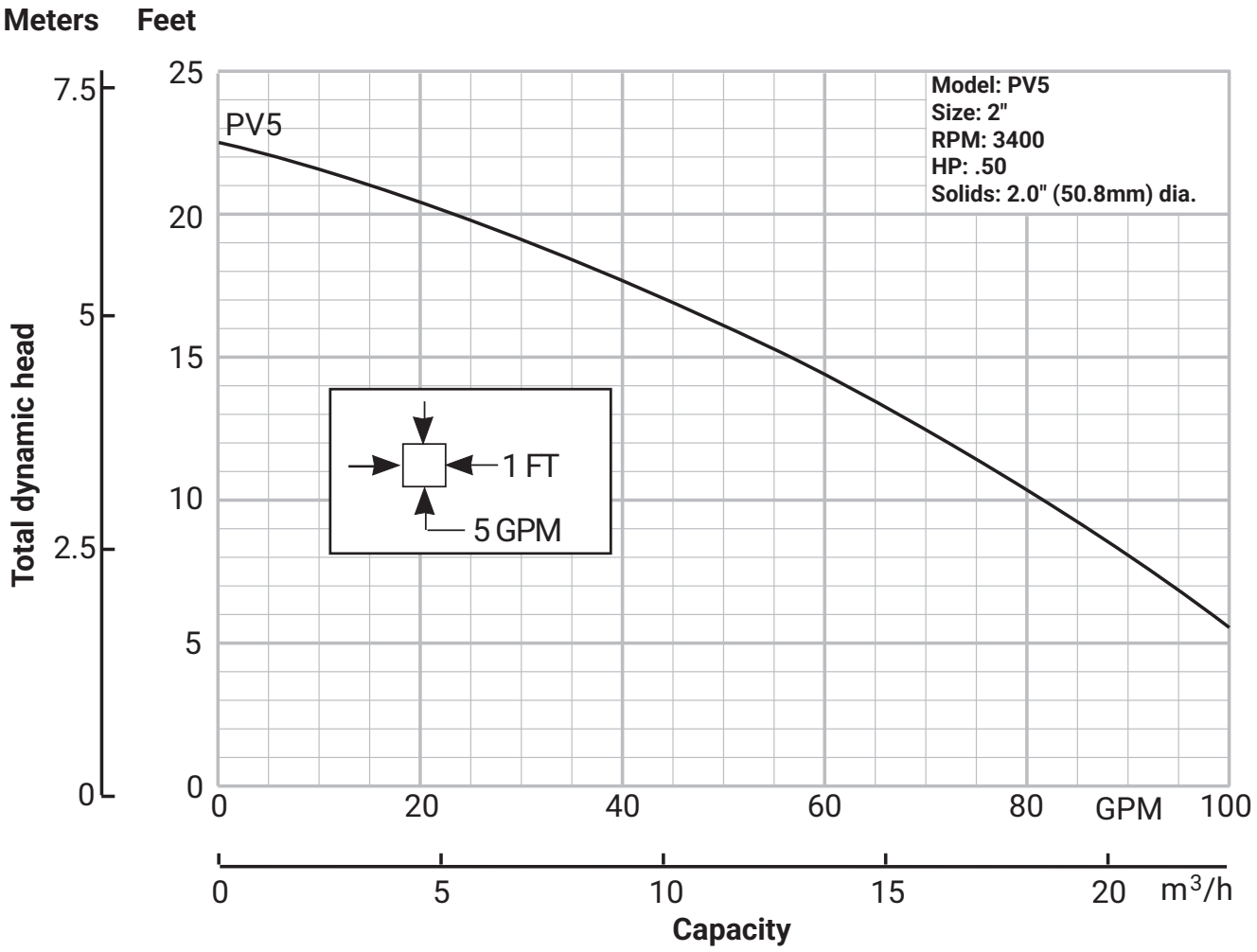

Dimensions

(All dimensions are in inches (millimeters). Do not use for construction purposes.)

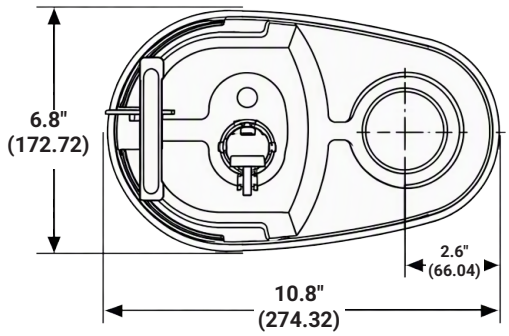

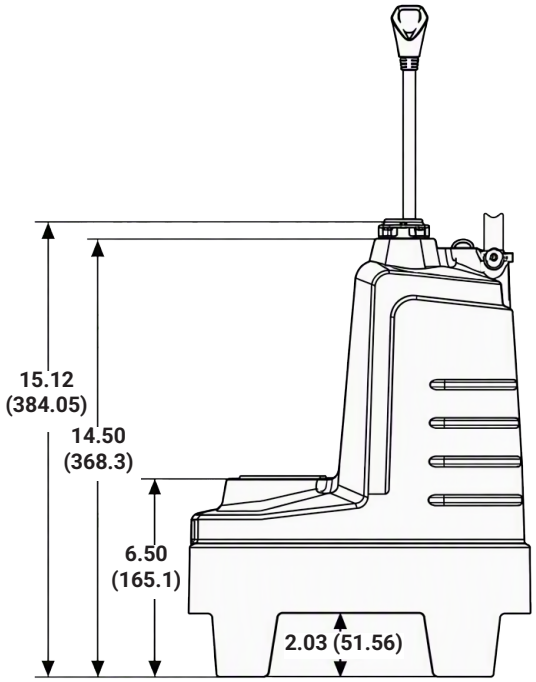

Learn more about PV pumps

This information is subject to change without notice. All information presented herein is believed reliable and in accordance with accepted engineering practices. Xylem makes no warranties as to the completeness of this information. Users are responsible for evaluating individual product suitability for specific applications. Xylem assumes no liability whatsoever for any special, indirect or consequential damages arising from the sale, resale or misuse of its products.

© 2026 Xylem Inc. or its affiliate. All rights reserved. Xylem is a registered trademark of Xylem Inc. or one of its subsidiaries. Goulds Water Technology is a registered trademark of ITT Manufacturing Enterprises LLC and is used under license. All other trademarks or registered trademarks are the property of their respective owners.

BPV R6 10/2026

xylem
Let's Solve Water