xylem



Deluxe package

Vantage® M83 reverse osmosis units

The clear advantage in membrane systems

Vantage M83 units are packaged single-pass 8-inch reverse osmosis units designed for a variety of industrial applications requiring high quality equipment with a fast delivery and competitive price. These pre-engineered, pre-assembled and factory tested units minimize installation and start-up time. With simple utility connections and easy to set up controls, the unit is ready for quick on-line service.

The Vantage M83 unit comes in four models: Economy (E), Plus (P), Deluxe (D) and Select (S).

- Economy (M83E) – controlled by microprocessor
- Plus (M83P) – controlled by PLC and user-friendly touch screen Human Machine Interface (HMI)
- Deluxe (M83D) – M83P controls plus Variable Frequency Drive (VFD) for flow control and Clean In Place (CIP) function, pressure transmitters for RO normalization, and pH/ORP monitoring
- Select (M83S) - a stainless steel "deluxe" package including stainless steel frame, piping and control pane

The Deluxe model features an "on-board" integrated cleaning system (CIP) initiated through the HMI. The CIP system includes plumbing to the on-skid RO cartridge filter housing and VFD controlled pump along with the factory supplied valves, hoses, and a polyethylene CIP tank (off-skid).

The Deluxe model is equipped with pressure transmitters that are linked to the control system such that the data can be collected and normalized for optimization of RO performance. Normalized RO data including permeate flow, differential pressure, and conductivity are calculated and trending data is displayed on the HMI.

Vantage M83 unit benefits

- Compact footprint saves valuable floor space
- Quick equipment delivery keeps project moving fast
- Clean-in-place connections maximize system serviceability
- Comprehensive factory testing performed at our ISO9001certified facility

Standard M83 unit features

- Choice of brackish water or low energy TFC membranes (400 ft^2) to ensure optimum water quality
- High pressure 316 stainless steel vertical multistage feed pump
- ASME Code FRP, RO pressure vessels with pressure relief protection
- PVC low pressure feed, product and reject piping, 316 L stainless steel high pressure piping
- Industrial coated carbon steel frame (304 stainless steel for Select)
- Dry contacts are provided for chemical feed, pretreatment equipment, storage tank levels, and pressure switches
- All alarm and shut down conditions are indicated on the control interface
- Tank level may be controlled via a 4-20 mA signal input for storage tank level on Deluxe/ Select models.

Specifications

	Flow rate specifications GPM nominal (m^3/hr)							Customer connection specifications			Utility requirements***			Approx shipping weight lb (kg)
Model no**	Product*	Feed	Reject	Recycle	Vessel staging	Membrane vessel	Membrane quantity	Feed	Product	Reject	High voltage service	High voltage FLA	Pump HP	
M83R006	30 (6.8)	40 (9.1)	10 (2.3)	10 (2.3)	1:1	3	6	2"	1.5"	1.5"	480 VAC 3ph	22.5	15	2850 (1293)
M83R009	45 (10.2)	60 (13.6)	15 (3.4)	5 (1.1)	1:1:1	3	9	2"	1.5"	1.5"	480 VAC 3ph	29	20	3050 (1383)
M83R012	60 (13.6)	80 (18.2)	20 (4.5)	5 (1.1)	2:1:1	3	12	3"	2"	1.5"	480 VAC 3ph	29	20	3250 (1474)
M83R015	75 (17.0)	100 (22.7)	25 (5.7)	3 (0.7)	2:2:1	3	15	3"	2"	1.5"	480 VAC 3ph	42	30	3500 (1588)
M83R018	90 (20.4)	120 (27.3)	30 (6.8)	3 (0.7)	3:2:1	3	18	3"	3"	1.5"	480 VAC 3ph	42	30	4100 (1860)

* Product flow rates are based on equipment design parameters listed below. Product flow rates may not be appropriate for other feed waters.
** The 8 designates 8" housing, the 3 designates 3 elements in length, and the R0XX designates the number of membranes.
*** Additional voltage options are available. Refer to equipment specifications.

Model features

Description	M83E (Economy)	M83P (Plus)	M83D (Deluxe/Select)
Controls	Microprocessor	PLC & HMI	PLC & HMI
Inputs/outputs	Discrete 14 point (8 input/6 output)	Discrete 32 point (20 input/12 output)	Discrete 32 point (20 input/12 output)
I/O expansion capability	No	Yes	Yes
Communication port	Ethernet optional	Ethernet	Ethernet
Remote monitoring/ communications*	Ethernet optional	Ethernet	Ethernet
Flow monitoring	Rotometers (product/reject/ recycle)	Paddlewheel (feed/reject) rotometer (recycle)	Paddlewheel (feed/reject) Rotometer (recycle)
Conductivity	Integral to controller	Signet multiparameter	Signet multiparameter
Auto-flush (standby)	Yes	Yes	Yes
Visual/audible alarm	Yes	Yes	Yes
Single power drop (480 VAC)	Yes	Yes	Yes
304LSS pre-filter housing	Yes	Yes	Yes
Variable Frequency Drive (VFD) pump	No	No	Yes
On-board CIP (tank off-skid)	No	No	Yes
ORP/pH with alarms	Optional	Optional	Yes
Pressure transmitters	No	No	Yes
Low pressure membranes (cold water)	Optional	Optional	Optional
Product divert kit	No	Yes	Optional

*Additional communication modules and remote monitoring capabilities available upon request.

Design parameters	
Feed water source	Well or softened
Maximum turbidity	1 NTU
Maximum free chlorine and/or chloramine	<0.1 PPM
Feed water fouling index	Silt Density Index (SDI) <3
Design feed water temperature*	65° F (18.3° C)
Inlet pressure requirements	30 - 60 PSIG
Product pressure available	10 PSIG
System recovery (nominal)	75%
Performance basis	A specific computer projection must be run for each individual application.

* Lower temperature may require larger booster pump or use of low energy membranes.
If any of the feed water parameters are not within the limits given, contact Xylem.

Dimensions

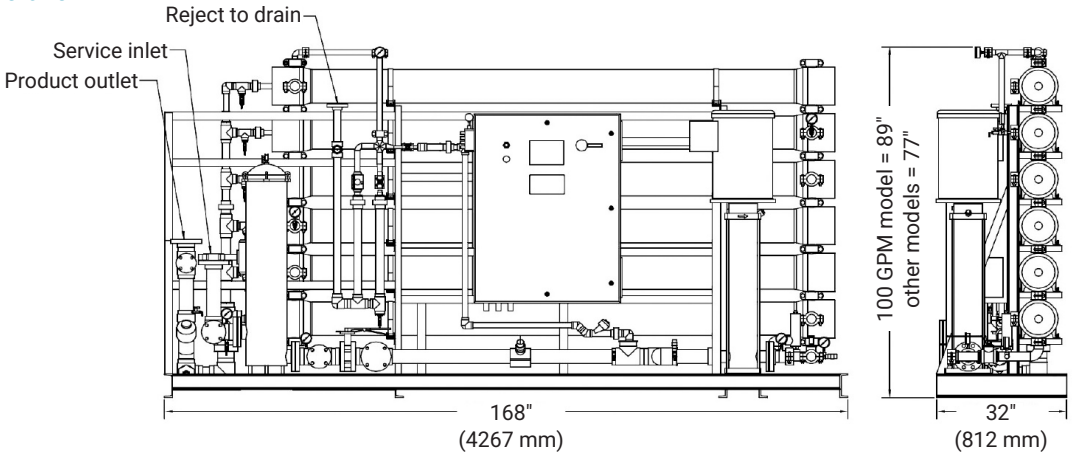

Xylem |ˈzīləm|

1) the tissue in plants that brings water and nutrients upward from the roots.

2) a leading global water solutions company.

Xylem is a leading global water solutions company dedicated to advancing sustainable impact and empowering the people who make water work every day. Xylem connects diverse capabilities and innovative technologies to provide tailored solutions across the entire water cycle. From moving, treating and measuring water to optimizing and maintaining water systems, Xylem collaborates with customers to solve their most critical challenges. Together, through partnerships with utilities, industrial manufacturers, building operators, and communities, we are building a more water-secure world.

For more information on how Xylem can help you, visit xylem.com.

xylem.com Tel +1 866.926.8420 (toll-free)

All information presented herein is believed reliable and in accordance with accepted engineering practices. Xylem makes no warranties as to the completeness of this information. Users are responsible for evaluating individual product suitability for specific applications. Xylem assumes no liability whatsoever for any special, indirect or consequential damages arising from the sale, resale or misuse of its products. Subject to change without notice.

© 2025 Xylem Inc. or its affiliates. Vantage is a trademark of Xylem or one of its subsidiaries. All other trademarks are those of their respective owners.
HPS-M83-RO-DS-1025