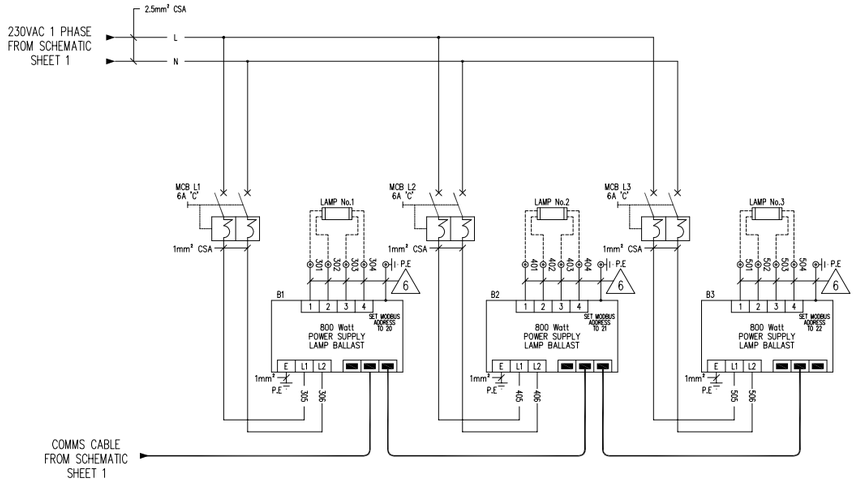

REV	DATE	DESCRIPTION	DRN.	CHK.	APP
1	22/03/2016	Issued for Manufacture	M.S	J.W	M.M
2	23/09/2016	Re-Issued for Manufacture with Updates	M.S	J.W	M.M
3	08/03/2018	Chamber Earth Cable CSA Updated	M.S	J.E	M.M
4	17/07/2018	Wiper Module Updated to AT-1040	M.S	J.E	M.M
5	19/03/2019	Wiper Motor Conductors 73 & 74 Swapped	M.S	J.E	M.M
6	-	-	-	-	-

atg UV Technology
LANCASHIRE
ENGLAND
Tel +44 (0) 1942 216161
Fax +44 (0) 1942 213131
www.atguv.com

CLIENT

TITLE
UV DISINFECTION UNIT
ELECTRICAL SCHEMATIC

DRAWING No ES_3X800_903233_55E3_1 (SHT2)

5

This drawing is the property of atg UV Technology. It is a confidential document and must not be copied, used, or its contents divulged (in whole or part) without prior written consent of the company.