

EXPERTS IN ULTRAVIOLET DISINFECTION

www.atguv.com

atg UV Technology

UVLA RANGE

INSTALLATION, OPERATION & MAINTENANCE MANUAL

Document History:

Issue	Creation Date	Created By
1	30/01/2019	James Ellis



atg UV Technology is committed to providing a global service network through local support.

For technical queries, to order spare parts or a service, please contact your local authorised service technician. Alternatively, please contact atg UV Technology's UK head office:

SPARES: E: spares@atguv.com | T: +44 (0)1942 216161 - Opt 1
SERVICE: E: servicing@atguv.com | T: +44 (0)1942 216161 - Opt 2

Manual Contents

UVLA RANGE 1

Document History: 2

Manual Contents 3

Health & Safety 5

Health and Safety Information 5

Introduction 7

An Introduction to UV Disinfection Systems 7

What is Ultraviolet (UV) Light? 7

How does UV Disinfection Work? 7

Safety Advantages of atg UV Technology Disinfection 7

Terminology 8

Installation Guidelines 10

General Installation Guidelines 10

UV Chamber 10

UV Control Panel Installation Guidelines 15

UVLA Installation, Commission & Calibration 16

Specific Installation Guidelines 16

Environmental Conditions 16

Cable Recommendations 17

Panel Supply Loads 19

Installation Checklists 20

Commissioning 22

Commissioning Procedure Checklist 22

UV Commission Work Sheet 24

Calibration 25

UV Sensor Calibration 25

UVLA Maintenance & Spares 27

Maintenance Schedule 27

Maintenance Log 27

Performance Monitoring 27

UV Lamp 27

Quartz Cleaning and Replacement 27

Seals 27

Control panel 27

Twistlok+ System Maintenance 28

UV Sensor Maintenance 30

Automatic Wiper System Maintenance 31

Manual Wiper System Maintenance 36

Spare Parts 37

General Assembly 37

Quartz & Lamp Assembly 38

UV Sensor Assembly 39

Automatic Wiper Drive Assembly 40
Manual Wiper Drive Assembly 41
Automatic Wiper Carriage Assembly 42
Maintenance Spares List 44

ATUV-1040 Automatic Quartz Wiping System 46
General Operation 46
LED Indicators & Push Buttons 46
Connection Diagrams 47
DIP-Switch Settings 48
Calibration 49
Run 49
Service Position 49
TroubleShooting 50

Micrologix Spectra Control R6.0 52
Micrologix Spectra Control System 52
Inputs and Outputs 54
Start-up Sequence 55
Lamp Screen 56
Operator Screen 58
Micrologix Control System – Operator 59
Micrologix Control System – Engineer Setup 70
Alarms 72
PID Tuning Screen 74
Information Screen 75
Troubleshooting 76
Service and Maintenance 81

Health & Safety

Health and Safety Information

Only suitably qualified personnel should operate/maintain the system - always follow safe working practices and do **NOT** take risks.
If in doubt always **ASK**, or for further information visit our website: www.atguv.com

	**All personnel involved in the installation, maintenance and operation of the UV system should read the relevant manual.**
	**Electrical Safety** **WARNING: Always ensure electrical plant or equipment is isolated before carrying out maintenance.**
	**Electrical Ground / Earth** **WARNING: All equipment must be Grounded / Earthed.**
	**Hot Temperature** **CAUTION: Chamber can be hot.** **Allow 15 minutes for lamps and other components to cool down before removal.**
	**Process Isolation - Fluid** **WARNING: Always fully isolate the system from the process before carrying out maintenance.** **DANGER: Failure to follow the correct procedures can cause serious injury or death due to forcible ejection of materials from the UV chamber.**
	**Process Isolation - Wiper** **CAUTION: Contact with moving parts can cause injury, for example trap fingers, clothing may become caught in moving parts of machinery, drawing in operatives.**
	**Ultraviolet Light** **WARNING: Do not expose skin or eyes to ultraviolet light.** **CAUTION: Do not touch lamps immediately after operation. Allow 15 minutes for lamps and other components to cool down.**

	**Quartz Components** **CAUTION: Handle quartz components with care to avoid breakages.**
	**Mercury - Lamp Breakage** **CAUTION: Lamps contain Mercury take care to avoid breakages. If a breakage occurs follow mercury spillage procedure below.**
	**Lamp Recycling** **Always recycle UV lamps properly and safely.**

Mercury Spillage	
Anticipate this event by collecting together a spill kit. Spill kits are commercially available; however most contain the following components:	1. Latex barrier gloves 2. Sealable plastic bag 3. Soft cloth, or cardboard rectangle 4. Syringe or pipette 5. Small brush, barrier foam or duct tape 6. Powdered Sulphur.
Mercury spillage procedure:	1. Put on Latex gloves 2. Collect quartz pieces, place in cloth in sealed bag. Mark bag as “sharp hazard” 3. Locate mercury ball. Use brush to aggregate smaller balls into large ball 4. Use syringe to draw up mercury bead. Transfer mercury onto paper towel, place inside sealed bag. Mark bag as “mercury hazard” 5. Use barrier foam or duct tape to collect remains of mercury - dispose of as detailed in point 4. 6. Consult site regulations regarding notification of a mercury spill. A UV lamp contains a maximum of 300 mg of mercury 7. Powdered Sulphur is optional - it can make collection of very small mercury balls easier.

Introduction

An Introduction to UV Disinfection Systems

Unlike chemical approaches to water disinfection, Ultra Violet (UV) light provides a rapid and effective method to disinfect water and other liquids.

What is Ultraviolet (UV) Light?

UV light is a form of light that is invisible to the human eye, and is classed as a non-ionising (or non-radioactive) radiation. It occupies the portion of the electromagnetic spectrum between X-rays and visible light.

How does UV Disinfection Work?

A unique characteristic of UV light is that a specific range of its wavelengths (those between 200 and 300 nm [billionths of a metre]) are categorized as germicidal – meaning that UV light damages the DNA and RNA of microorganisms and prevents them from causing infection. This capability has allowed widespread adoption of UV light as an environmentally friendly, chemical-free, and highly effective way to disinfect liquids.

Safety Advantages of atg UV Technology Disinfection

- UV is a chemical-free process that adds nothing to the water except UV light.
- UV requires no transportation, storage or handling of toxic or corrosive chemicals – a safety benefit for plant operators and the surrounding community.
- UV treatment creates no carcinogenic disinfection by-products that could adversely affect the quality of the treated water.
- UV is highly effective at inactivating a broad range of microorganisms including chlorine-resistant pathogens like Cryptosporidium and Giardia.
- UV can be used (alone or in conjunction with hydrogen peroxide) to break down toxic chemical contaminants while at the same time performing disinfection of the treated water.

atg UV Technology Disinfection Systems

The main features of the atg UV system are:

- UV Reactor: stainless steel reactor inside which water is exposed to UV light for disinfection.
- UV Lamps: emit high-intensity UV light; housed inside chamber and protected by quartz sleeve.
- Control Panel: contains electronics for system; controlled through user interface on outside.
- Wiper: motorised system used to clean lamp sleeves.
- UV Sensor: monitors UV intensity inside chamber and feeds readings back to control panel.
- Temperature Sensor: monitors temperature of reactor to protect people and equipment if the water flow is interrupted unexpectedly.
- Note: not all systems are fitted with Wiper, UV Sensor and Temperature Sensor.

Terminology

The following terminology is used throughout this Manual:

Term	Description
Control Panel	Contains control and power electronics for UV system
ATUV-1020	Common I/O module
ATUV-1031	Lamp module
AT-463	4-20mA UV sensor used to measure the UV intensity and so report on the performance of the system.
AT-900	4-20mA Validated UV Sensor
Bank	The term used to describe 2 lamps running in series powered by a single power supply
ELR	Earth leakage relay - used to measure earth leakage to operate an associated relay
Isolator	Disconnects system from power supply
MCB	Miniature circuit breaker
RCD	Residual current device
Electronic Ballast	Power supply used to control the starting voltage of the UV lamp and regulate the operating current
Wiper	Cleaning system for UV Lamp sleeves; may be manual or automatic

Term	Description
Spectra/Synergy	Electronic control systems used for monitoring and control of UV treatment
UV Sensor	Component for continuous measurement of the UV-C intensity inside the reactor
UV Reactor	Comprising a single chamber in which water is treated by UV irradiation, and the associated inlet and outlet valves, components and instruments
Restrike Timer	Timer used by the control system to allow the lamps to cool after stopping, during this time the lamps are inhibited from starting
Start-up Mode	Period between switch on of the UV system and running mode
Running Mode	When all lamps are struck and the dose reading has exceeded the minimum Dose level
Lamp Power	Electrical Power rating of UV Lamp
Dose	Calculation of the amount of UV treatment the water is receiving, based on UV intensity and flow rate
UV Intensity	A measurement of the strength of the Ultraviolet (UV) radiation given off from the UV lamps
UVC	A region in the electromagnetic spectrum. Wavelength range 200-280 nm
UVT	Ultraviolet transmissivity of the water undergoing treatment
Validated	Certified envelope of operation of UV Reactor, comprising for example flow, UVT
Pathogen	A bacterium, virus or other microorganism that can cause disease

Installation Guidelines

General Installation Guidelines

The guidelines in this section are designed to assist in the installation of an Ultraviolet Disinfection system into a typical plant. The recommendations below are **NOT** definitive. Depending on the installation, it may be necessary to install contrary to specific recommendations. If at any stage you are unsure as to any aspect of these instructions, consult with a specialist installation contractor. Please also make use of the Installation and Commissioning Checklists later in this manual section.

Please be aware:

- The manufacturer cannot accept responsibility for any installation carried out by other parties.
- When planning or executing any installation ensure all local Health & Safety Regulations are followed, local codes complied with and implement all appropriate risk assessments.
- Always allow a footprint around the chamber and control panel to allow safe work and access.

UV Chamber

Location of UV Chamber – Process Considerations

1. Unless there are other process considerations the UV unit should be located as close to the point of use as possible.
2. The UV system is normally installed after all other physical or conventional water treatment equipment (filters, softeners, de-mineralization etc.). The effectiveness of UV treatment is dependent upon water clarity and removal of the majority of suspended solids will reduce fouling of quartz sleeves and thimbles. However, for certain process requirements and considerations, the UV unit may need to be installed 'up front' and before some or all of the treatment equipment.
3. If chemical dosing is utilized to provide a residual, this should be installed downstream of the UV chamber. This will reduce chemical reduction by the UV system and will prolong the chamber life.

Location of UV Chamber – Mechanical Considerations

1. Allow sufficient room for removal and replacement of lamps, quartz sleeves / thimbles and wiper components (where fitted).
2. Ensure the UV Chamber location does not prevent safe maintenance of existing equipment.
3. Ensure that all equipment and pipe work will be adequately supported when installed. The UV chamber should not be used to support the pipe work, or else this may damage the UV chamber.
4. Avoid locating chambers and panels under dripping pipe work or chemical equipment and avoid storing chemicals that can lead to corrosion of system components, close to the UV equipment.
5. To minimize flow interruption and where process considerations allow it, a by-pass should be installed around the UV chamber.
6. Plan a drainage route for the equipment to the plant room main drain. It is good practice to install lockable ball valves on the drain and vent to aid maintenance.
7. The preferred material for the connecting pipework is stainless steel (either 304 or 316L grade), although straight pipe sections of uPVC may be connected direct onto the UV chamber, provided they are a minimum Class 'E' (BS 3505). These materials should be used for a minimum straight section of 1000 mm, if the pipe is 6" or greater in diameter. If the pipe is less than 6" in diameter a minimum straight section of 500 mm should be used. ABS should not be used. If plastic pipe is used, the same size connection should be used for the connecting pipework. **Reducing pipework connection size directly onto the UV chamber is not recommended!**
8. If the pipe is 6" or greater in diameter, any elbows within 1000 mm of the UV chamber must be stainless steel. If the pipe is less than 6" in diameter, any elbows within 500 mm of the UV chamber must be stainless steel
9. If the pipe is 6" or greater in diameter, any valves within 1000 mm of the UV chamber must be have a stainless steel disc (or other metal) and are not coated with a polymer material if the pipe is less than 6" in diameter, any valves within 5000 mm of the UV chamber must have a stainless steel disc (or other metal) and are not coated with a polymer material.
10. Do not install in direct sunlight and protect from extremes of environment (Weather, High Humidity, High or Low Temperatures).
11. Where cable lengths exceed the distance between the control panel and UV chamber, ensure these are not coiled as this could create un-wanted noise on the signal cables, and in the case of lamp cables, a voltage drop may result. Please contact atg UV for further information.

Location of UV Chamber – Airlocks/ Water Hammer

1. Install the pipe work in such a way that the UV Chamber always remains flooded. If the chamber drains down, the mechanical shock when full flow is regained may damage the quartz components
2. If it is not possible to ensure the chamber remains flooded due to its location, air release and check valves can prevent emptying and draining of the system. Discuss this with your installer
3. The chamber should not be allowed to drain when not in use as this can damage internal components
4. Avoid excessive water hammer as this can damage quartz components. Avoid locating the chamber close to the outlet side of a pump. If this is unavoidable, installing a 'soft start' on the pump can reduce the chance of quartz breakages
5. On installations where the chamber and / or pipe work cannot remain flooded, a bypass should be installed where it can be easily operated. This should be opened when flow is restarted otherwise lamp and quartz breakage may occur. (Flow restarting can mean the pump starting, a backwash cycle or movement of another valve).

Location of UV Chamber – Special Considerations for Drinking Water Treatment Plants

1. As per the UVDGM guidelines, it is a requirement for all Validated systems to install a straight piece of pipe with a minimum of 5 pipe diameters upstream of the chamber to ensure good flow characteristics through the chamber, as shown in the example installation diagrams on the following page.

Chamber Orientation

1. Ensure the temperature probe (if fitted) is located on the top of the UV system.
2. Ensure the air vent (if fitted) is located on top of the UV system.
3. Install the system so that both the temperature probe and the UV monitor can be installed and maintained.
4. Ensure the lamps and sleeves can be removed, and service access is considered for the UV system and adjacent equipment.
5. UV lamps should be installed horizontally for both vertical pipe and horizontal pipe configurations, unless otherwise specified.

Cross Flow Chamber Installation Example

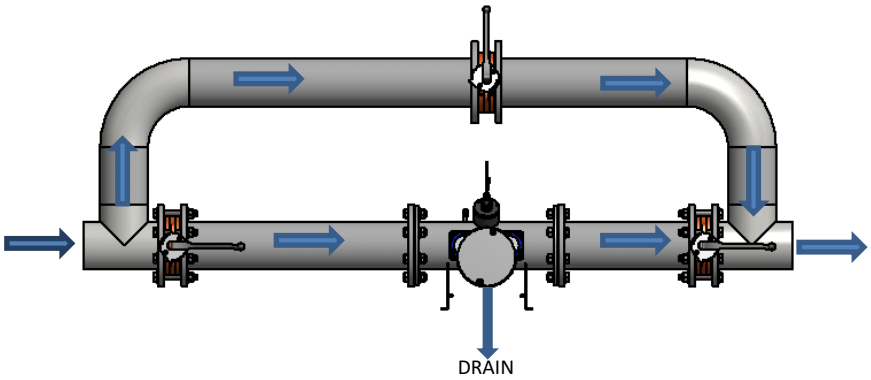

Note: Chamber can be positioned vertically ensuring the lamps remain horizontal

Axial Flow Chamber Installation Example

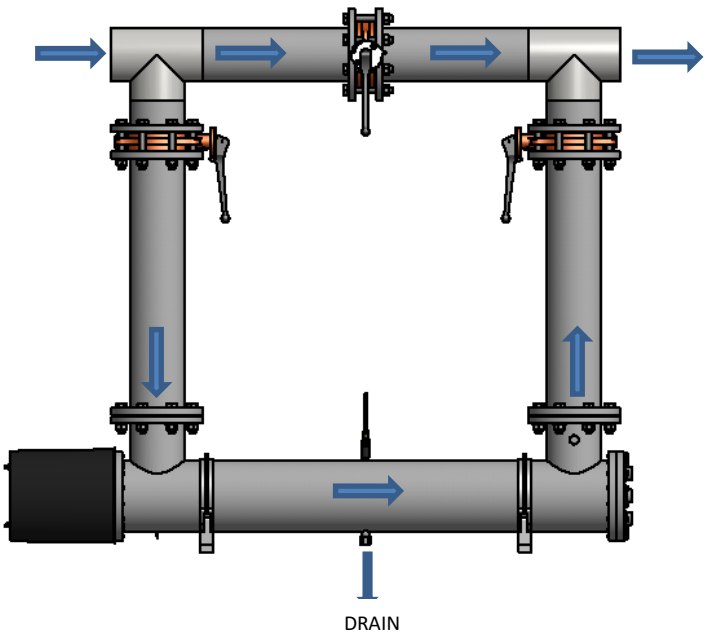

Temporary Basket Strainer Installation (Optional)

1. These should be located after the UV unit. Where the temporary basket strainer is of a larger micron rating than the upstream filtration then regular access to the strainer should not be required. However the strainer should be accessible if necessary.
2. We recommend installing this device after the UV system in a spool piece, which can be removed for maintenance in the orientation shown in the diagram below. If the UV chamber is mounted in a vertical section of pipe work, it is recommended that a point of access be provided to the pipe section below the chamber, in order to remove any quartz shards which have dropped through it.

Diagram of Strainer Installation

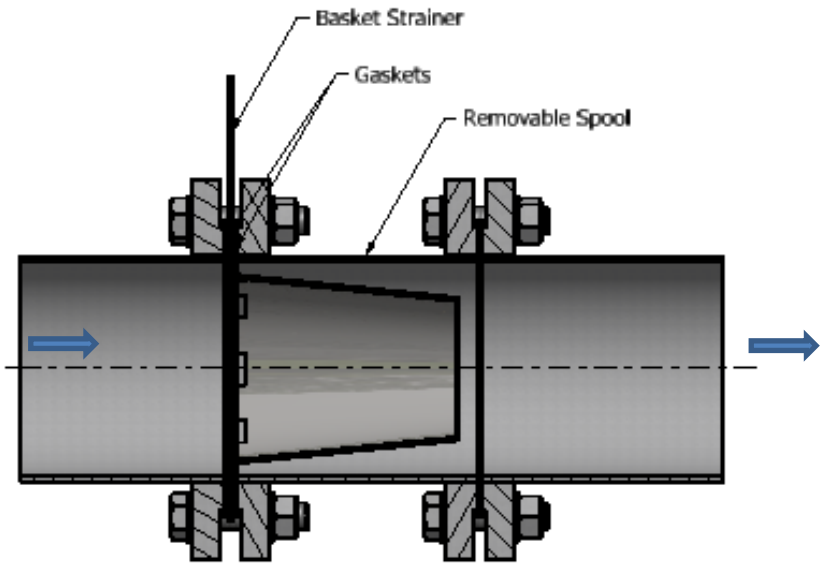

UV Control Panel Installation Guidelines

1. Complete the Installation and Commissioning Checklists later in this manual section to ensure proper installation and safe work.
2. Locate the panel as close as possible to the chamber
3. Ensure the correct supply is available on site and the correct supply cable is used. If the correct voltage is not available, a Step Up / Step Down transformer may be needed - please contact your supplier for details.
4. Ensure the correct circuit breaker size and type is available for the unit (see the Cable Recommendations subsection of this manual). If the suggested breaker is installed then sufficient discrimination should be ensured.
5. Ensure that the UV chamber and the control panel are correctly earthed / grounded – an Earth / Ground point and cable is fitted & supplied to all UV chambers.
6. The panel must be firmly mounted against a vibration free wall or suitable supporting frame.
7. Ensure panel fans (if fitted) are not obstructed. It is recommended to change or clean the filter media once construction on a project has finished.
8. Do not install in direct sunlight and protect from extremes of environment (Weather, High Humidity, High or Low Temperatures).
9. Install control panel display at eye level.
10. Do not locate the control panel in areas where it may be subjected to chemical or water leaks.
11. If the panel is floor mounted ensure that the panel is not located in a potential flood area.
12. Ensure the correct control panel is matched with the appropriate chamber. The chamber can be identified by an engraved serial number located on a fixed flange of the chamber. The panel can be identified by the label on the inside the door. These two codes should match exactly (e.g. C11111-A).
13. If a junction box is to be used to extend lamp cables, these must be 1000V rated.
14. For lamp cables that require earthing, ensure the cable braiding has been screened and connected into each lamp/bank earth terminal (if provided). See image below.

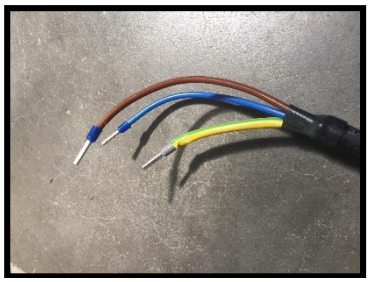

Screened Lamp Cable

UVLA Installation, Commission & Calibration

Specific Installation Guidelines

Environmental Conditions

Unless otherwise agreed the following environmental conditions should be met:

Condition	Range
Ambient Temperature	0 – 45 °C (32 – 113 °F)
Relative Humidity	< 90%

Cable Recommendations

Below are recommendations for a cable:

- Length **not exceeding 10 metres**
- Un-bunched installed in trunking/cable tray
- Installed in an ambient temperature of 0…45ºC

If there are any other specifications that are in place that does not meet this criteria, please contact atg UV for further information.

Model	No. of Lamps	Lamp Power	Cable to Panel from Distribution	Breaker in Distribution Panel
UVLA-340-*	1	340W		
UVLA-2340-*	2	340W	2.5mm^{2}c.s.a., 600/1000V,	
UVLA-3340-8	3	340W	3-Core cable (L, N & E)	
UVLA-4340-8	4	340W	Steel Wire Armour Cable with	(site specific upon design)
UVLA-5340-*	5	340W	Weatherproof Gland	
UVLA-6340-*	6	340W		
UVLA-8340-*	8	340W		
UVLA-10340-12	10	340W	6mm^{2}c.s.a., 600/1000V,	
UVLA-12340-12	12	340W	3-Core cable (L, N & E)	32Amp
UVLA-14340-14	14	340W	Steel Wire Armour Cable with	Type “D” Miniature Circuit Breaker
			Weatherproof Gland	
UVLA-16340-14	16	340W	6mm^{2}c.s.a., 600/1000V,	
UVLA-20340-14	20	340W	3-Core cable (L, N & E)	40Amp
UVLA-24340-20	24	340W	Steel Wire Armour Cable with	Type “D” Miniature Circuit Breaker
			Weatherproof Gland	

Model	No. of Lamps	Lamp Power	Cable to Panel from Distribution	Breaker in Distribution Panel
UVLA-26340-20 UVLA-28340-20 UVLA-30340-20 UVLA-32340-20	26 28 30 32	340W 340W 340W 340W	6mm^{2}c.s.a., 600/1000V, 3-Core cable (L, N & E) Steel Wire Armour Cable with Weatherproof Gland	63Amp Type “D” Miniature Circuit Breaker

* Chamber allows for multiple body sizes

Note: If additional Lamp cable is required, only approved cable is to be used due to the high frequency output from the electronic ballasts. Please contact atg UV for further details.

WARNING! Always ensure cables are installed with adequate mechanical protection!

Disclaimer: These cable recommendations are sized based on the maximum load of the system, therefore fault protection/discrimination should be assessed depending on the site installation and local regulations. **atg UV Technology** is not responsible for any unsafe work practices, procedures, actions or inactions taken by the client during the installation.

Panel Supply Loads

Model	No. of Lamp Drivers	Lamp		Supply Loads
		Power (W)	Nominal Current (A)	230V
UVLA-120-4	1	120W	1.4	2A
UVLA-200-*	1	200W	2	2A
UVLA-340-*	1	340W	3.3	3A
UVLA-2200-6	2	200W	2	3A
UVLA-3200-8	3	200W	2	4A
UVLA-3340-8	3	340W	3.3	5A
UVLA-4200-8	4	200W	2	5A
UVLA-4340-8	4	340W	3.3	8A
UVLA-6340-*	6	340W	3.3	10
UVLA-8340-*	8	340W	3.3	13
UVLA-10340-12	5**	340W	3.3	16A
UVLA-12340-12	6**	340W	3.3	20A
UVLA-14340-14	7**	340W	3.3	23A
UVLA-16340-14	8**	340W	3.3	26A
UVLA-20340-14	10**	340W	3.3	32A
UVLA-24340-20	12**	340W	3.3	39A
UVLA-26340-20	13**	340W	3.3	42A
UVLA-28340-20	14**	340W	3.3	45A
UVLA-30340-20	15**	340W	3.3	48A
UVLA-32340-20	16**	340W	3.3	51A

* Chamber allows for multiple body sizes

* * Run as a Bank with 2 lamps connected in series powered by a single Lamp Driver

Installation Checklists

General Installation Checklist

Inspect the goods to ensure no damage has occurred in transit. Check that that all ordered items are present.	
Match the chamber and panel - if multiple systems are delivered to the same site please ensure that the serial numbers match.	
Install the control panel as described in the Control Panel Installation Guidelines	
Run the cables in accordance with local regulations. (Do not pull cables tight around sharp corners as this may affect the performance and reliability of the system, segregate cables, do not cable tie together.)	
Cabling required from Control Panel to Chamber: • Lamp Cable • Earth Cable 1 core • Temperature Probe Cable – 1 per probe (if supplied) • UV Probe Cable - 1 per probe (if supplied) • Wiper Cables – supplied as standard (if wiping mechanism is fitted) ➢ Opto Cable ➢ Wiper Motor Cable Cable sizing should be in accordance with Cable Recommendations section	

Chamber Installation Checklist

Connect Earth/Ground cable from the boss on the chamber to the control panel ground/earth point.	
Install the temperature probe (if supplied) by screwing the AT487- temperature probe into the boss on the top of the chamber. Connect the temperature probe cable.	
Install UV Probe (if supplied) Insert the UV probe/s supplied into the UV housing located on the chamber Connect the UV Probe cable.	
Check the quartz sleeve/seal Prior to flooding, remove the lamp connectors & UV Probe Housing and check the quartz is not damaged	
Install the lamp and make the electrical connections Check that the correct lamp is used, visually checking the lamp for any damages. If more than 1 lamp is fitted ensure the lamps are fitted in order (i.e. lamp1 then lamp2 etc.)	

Control Panel Installation Checklist

Before the power supply to the panel is switched on:	
Connect the Earth/Ground cable from the chamber to the terminal provided in the panel.	
Connect the Temperature probe and UV probe (if supplied) as per the schematic; this is usually on a terminal strip at the bottom of the panel. Adjacent numbers relate to the connections of the probe wires	
Connect the lamp cables as per the schematic; this is usually on a terminal strip at the bottom of the panel. Adjacent numbers relate to the connections of the lamp cable cores single lamp. See electrical schematic for more information	
Connect the wiper cables (if a wiping mechanism is fitted) The wire numbers from the wiper mechanism relate to the numbers on the terminal strip. See electrical schematic for more information. Consult Wiper System section for more details on wiper. Note: The wiper is factory calibrated. Please ensure the cables are connected before turning the board on or the wiper will lose its calibration and will require recalibration.	
Connect the Customer I/O – Connect the digital/analogue I/O as required. Please refer to the Operation section of the manual	

Commissioning

Use the Commissioning Procedure Checklist to safely put the unit into operation. The following steps should also be taken:

1. The pipe work and UV systems should be filled with water and excess air vented. Check for leaks
2. For commissioning the flow rate of liquid to cool the lamps should be at least 1 m^3/hr (4 gpm) per kW to cool the lamps
3. After lamps have been switched off wait 15 minutes to allow them to cool before attempting to restart - frequent start / stop cycles will shorten lamp life.

	**WARNING!**
	Only switch the unit on when the dust cover is fitted.

Commissioning Procedure Checklist

Ensure the unit has been installed as per local regulations and according to the Installation Guidelines	
Check that the incoming mains connections are correct: Single Phase Neutral and Earth, 2 Phase Neutral and Earth, 3 Phase Neutral and Earth, Please check the electrical schematics to verify what power supply is required	
Ensure quartz and lamps are installed and waterproof	
Ensure Temperature and UV Intensity probes (if supplied) are installed and connected to their corresponding terminals in the control panel	
Ensure Lamp cables are installed and connected to their corresponding terminals in the control panel	
Ensure the earth/ground cable is connected from the chamber to the terminal provided in the panel.	
Ensure full flow through the reactor is available and any air trapped at the top of the reactor is released	
Turn on the power at the distribution source	
Check that the voltage on the incoming side of the Isolator is correct and record this in the UV Commission Work Sheet that follows this section	
Test temperature sensor (if supplied) by disconnecting the probe on the chamber; a fault should be displayed. Reconnect the probe and clear the fault (see Operation section for more details)	
Time & Date - verify that the time and date are set correctly and adjust if necessary (see Control System section for more details)	

Check that the system variables are set as required – consult the System Data-book for more details	
Turn on the Lamp MCBs	
Start the system	
Check the fan is running correctly (if fitted)	
Calibrate the UV probe (if supplied) – consult the UV Sensor Calibration section for more details	
Stop the system	
Activate the Automatic Wiper (if wiping mechanism is fitted) - the system should perform a sweep of the quartz as soon as the Wiper control board is activated Calibrate the wiper (If necessary) – consult the **Automatic Quartz Wiping System** section for more details	

UV Commission Work Sheet

All readings to be obtained with Fixed Flow Rate and lamp in Full Power

Supply Voltages	
P1 – P2	
P1 – P3	
P2 – P3	
P - N	

Lamp Current / Volts (Voltages taken on lamps below 3.3KW only)											
L1			L2			L3			L4		
L5			L6			L7			L8		
L9			L10			L11			L12		
L13			L14			L15			L16		
L17			L18								

Spectra Readings		Calibration				Spectra Settings	
Dose (mJ/cm²)		Probe 1 UV %		m/A		Final UVT %	
Temp ˚C		Probe 2 UV %		m/A		Flow meter Enabled (Y or N)	
Flow (m³/hr)		Probe 3 UV %		m/A		Auto Restart Enabled (Y or N)	
Nominal lamp current		Probe 4 UV %		m/A		Re Strike Time (mins)	
Average lamp current		Probe 5 UV %		m/A		Spectra II SD Card back up	
Average UV%		Probe 6 UV %		m/A			
		Probe 7 UV %		m/A			
		Probe 8 UV %		m/A			
		Probe 9 UV %		m/A			

Checks (pass √ or fail X)		(√ or X)		(√ or X)		(Y or N)	
Earth Leakage Trip		Lamp Fault		Chamber		Installed Correctly	
Temperature Trip		MCB's Test		Auto wiper		Wiper Calibrated	
Chamber Earth Cable		Quartz Leaks		Low Dose Alarm		Lamp Cable Flash Test	

Condition of UV system on leaving site					
Clean		Local/Remote		By-Pass fitted (Y or N)	
Alarms		Full/Variable/Half Power Enabled		Running (Y or N)	

Calibration

UV Sensor Calibration

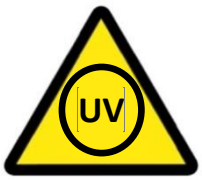

Warning: Do not expose skin or eyes to ultraviolet light.

AT 900 Validated 4-20mA UV Sensor

The validated UV sensors are factory calibrated in reference to a known device.
They are most often used on validated UV systems but can also be used on non-validated UV systems. These sensors are 4-20mA devices and are fitted to the UV sensor housing using a black plastic adaptor.

These sensors must be returned to the factory for calibration every 12 months.
Please contact your supplier for details.

AT 605 UV Sensor

Factory calibrated. Refer to (see **Control System** section for more details)

AT 463 4-20mA UV Sensor

The AT-463 is a 4-20mA UV sensor used to measure the UV intensity and so report on the performance of the system.

AT-463 Circuit Board

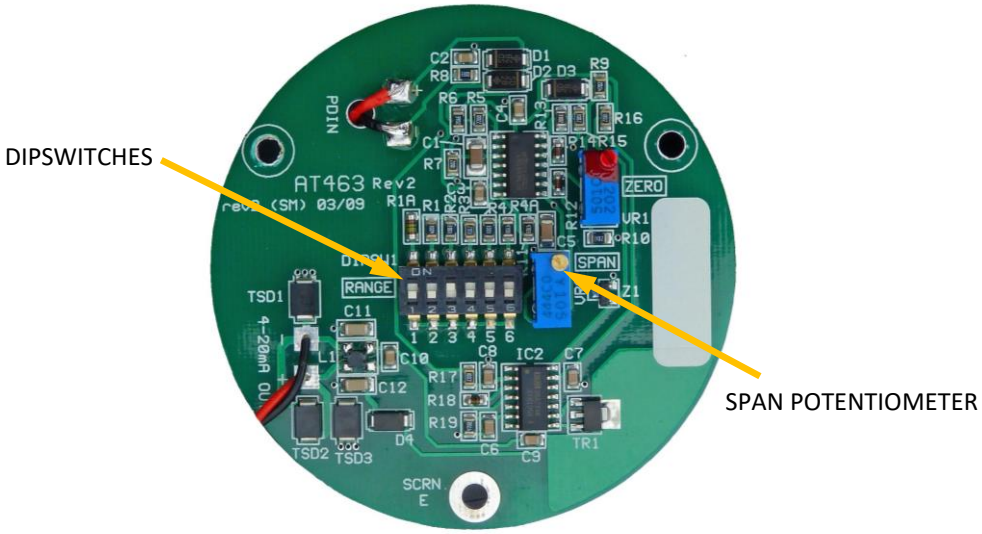

The UV intensity sensor should be calibrated to 100% on system commissioning with the chamber full of the process fluid. At every lamp change the sensor should again be calibrated to 100% to allow for the natural aging of the sensor.
Note: If the system has highly variable water quality or the UV system is installed on a critical process, calibration should be performed in conjunction with a water sample to be assured of the correct level of treatment. Please contact your supplier for more details.

AT-463 Calibration Procedure

1. With the UV sensor installed on the UV reactor, remove the 3 screws and open the lid.

   Inside, two potentiometers and a six-pole dipswitch are visible; the **Zero** Potentiometer is factory set, sealed and should NOT be adjusted.

2. Ensure the system's power is set to ***Full***. This can be performed via the Operator Menu Screen – Control Mode. Please refer to Control section for details.

3. Start the system and allow the lamp to stabilize for approximately ten minutes.

   On Synergy 2 & 3 control panels, monitor the UV% LED display

   On the SPECTRA II control panel:

   For Membranes: In the MAIN INFORMATION screens, select Average Intensity, then press the ENTER button to display % UV Intensity.

   For Touch Screens: Select the UV Intensity Icon, then select the desired UV Probe icon that is to be calibrated to display the % UV Intensity

4. Adjust the **Span** Potentiometer until the Intensity reading is as close to 100% as possible. Turning the screw clockwise will increase the reading; turning the screw anti-clockwise will decrease the reading.

   If it is not possible to achieve 100%, change to the next higher sensitivity dipswitch.

   If the reading is constantly over 100%, change to the next lower sensitivity dipswitch.

   The dipswitches set the amplification range with position 1 being the highest sensitivity gain and position 6 being the lowest sensitivity.

   Note: (It is likely that the system will have been shipped with the correct dipswitch already selected)

5. Stop the System. The intensity reading should read 0%. Wait a few minutes for the lamp to cool and restart the unit. After restart, the intensity display should settle back to 100% (+/- 5%).

   The UV Intensity monitor is now set up correctly. No further adjustments need to be made.

6. Ensure the system's power is set to ***Variable***. This can be performed via the Operator Menu Screen – Control Mode. Please refer to Control section for details.

7. Close the UV Intensity monitor's lid and replace screws.

UVLA Maintenance & Spares

Maintenance Schedule

Maintenance Log

Whenever maintenance work is carried out on the UV system, particularly with reference to lamp changes and cleaning / replacing the quartz, a record should be kept of the work carried out and the lamp run hours noted. This log should be used to monitor general lamp life and to develop accurate frequencies for cleaning and replacing the quartz components.
A maintenance log sheet can be found in the Unit Data-book.

Performance Monitoring

Taking samples from the sample points on the inlet and outlet legs of the UV chamber can be used to monitor the performance of the system. Care should be taken when sampling not to contaminate the sample itself. Poor performance test results can often be traced back to poor sampling techniques.
Note: ensure system is electrically isolated and chamber is fully drained before any maintenance work is carried out.

UV Lamp

Lamp life expectancy is based on continuous use before the output drops to the low UV output threshold level, making replacement necessary. Frequent stop / start operation will reduce lamp life. Please refer to the system Data-book for typical life expectancy of Lamps.

Quartz Cleaning and Replacement

The quartz sleeve should be removed and cleaned at a regular intervals. Please refer to the system Data-book for typical life expectancy of Quartz. The wiper (if fitted) cleaning frequency should be increased if there are excessive deposits on the quartz sleeve or decreased if the sleeve remains very clean.
A change in water quality may necessitate a change in the wiper (if fitted) cleaning frequencies. The quartz sleeve should be removed and cleaned in a soap and water solution. Heavier or stubborn deposits can be removed by soaking in a 5% solution of citric acid or wiping with household vinegar. To remove fingerprints from the quartz sleeve, use surgical spirit and a lint free cloth. Please refer to the system Data-book for typical life expectancy of Quartz.

Seals

It is good practice to replace the seals whenever the quartz sleeve is removed from the chamber.

Control panel

Commissioning often takes place in a dusty environment. The inlet filter mat should be cleaned shortly after commissioning and at regular intervals depending on the cleanliness of the air. The control panel RCD (ground fault relay) should also be tested at regular intervals by an electrically competent person by pressing its Test button.
Note that this will shut the unit down and display a Ground Fault.

Twistlok+ System Maintenance

UV Lamp Maintenance

Please refer to the Health & Safety Section at beginning of the manual for Symbol explanations. These are to be adhered to when carrying out the following maintenance procedures.



UV Lamp Extraction	
1	Twist the locking ring on the electrical connector anti-clockwise and remove the Twistlok+ plug.
2	Unscrew the clamp ring retainer in place the Twistlok+ connector & lamp
3	Rotate the TWISTLOK+ lamp connector anticlockwise about 2 full turns to release the lamp the gently extract the lamp. Once the lamp is protruding from the clamp ring, disconnect the connector from the lamp.
4	Carefully extract the lamp (connected to the Twistlok+ connector) from the quartz keeping the lamp parallel to the quartz sleeve at all times to avoid damage.

UV Lamp Installation	
Before inserting a new lamp, ensure all components are clean and dry. Check that all components are mechanically sound and assembled correctly. **Note:** Please ensure that no dirt, debris or fingerprints get onto the lamp surface as this will reduce the lamp life	
1	Carefully insert the lamp into the quartz sleeve, keeping it parallel with the sleeve to avoid damage. Leave the lamp with the end connector protruding from the clamp ring.
2	Connect the TWISTLOK+ connector to the lamp and insert the connector into the clamp ring. While applying light pressure on the connector, rotate the connector for 2 full turns clockwise until the flange on the connector is flush with the clamp ring.
3	Replace the metallic retaining ring and rotate clockwise to secure the lamp in place.
4	Re-fit the Twistlok+ plug. This is done by first lining up and engaging the contacts then rotating the locking ring ¼ turn clockwise to secure in place.

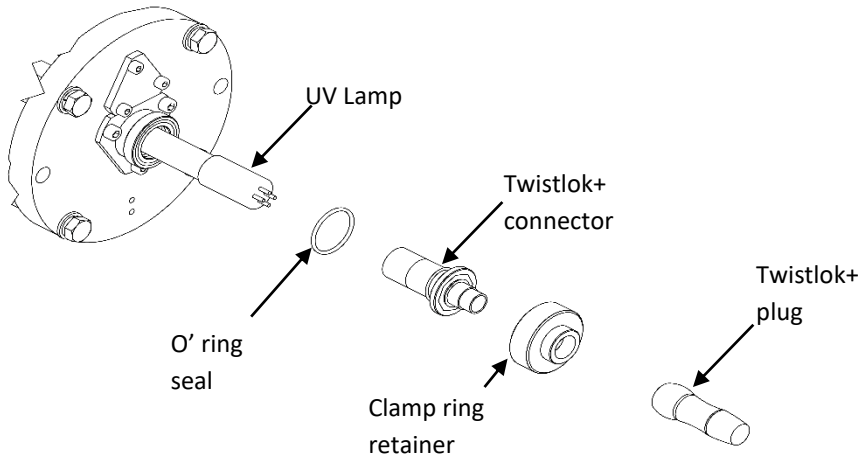

Quartz Sleeve Maintenance

Please refer to the Health & Safety Section at beginning of the manual for Symbol explanations. These are to be adhered to when carrying out the following maintenance procedures.

	

Quartz sleeve Extraction	
1	Follow the **UV Lamp Extraction** procedure detailed in the previous subsection
2	Remove the clamp ring screws and carefully remove the clamp ring. If the clamp ring seems tightly in place this will be the secondary seal doing its job and this is normal. Gentle twisting of the clamping should ease extraction.
3	Remove the primary 'O' ring seal from around the quartz.
Follow procedures 2 & 3 on opposite side of the chamber with the rear clamp ring	
4	Carefully remove the quartz sleeve keeping it parallel to avoid damage

Quartz sleeve Installation	
1	Carefully slide the new/cleaned quartz sleeve into the hole in the end flange keeping it parallel so it locates in the cup at the opposite end of the chamber. If an automatic wiping system is installed, ensure the sleeve is gently guided through the wiper ring (this is can be aided by applying a little water onto the end of the quartz)
2	On the lamp connector side, ensure the secondary seal and the electrical connector seal are installed correctly and are in good condition, replace as necessary. On the closed end side, ensure that the secondary seal and the lamp soft seat are installed correctly and in good condition, replace as necessary. Place the primary 'O' ring seal over the quartz sleeve and locate into the 'O' ring groove. Ensure that the quartz remains central in the chamber
3	Place the clamp ring over the sleeve and fasten with the screws finger tight initially. Then tighten the screws in a radial pattern, a quarter turn at a time until the clamp ring is flush with the flange. *Note: When installing the clamp ring – rear, ensure that the lamp soft seat is positioned inside the sleeve and is free to slide.* **Ensure the seal does not leak.**
4	Follow the **UV Lamp Installation** procedure detailed in the previous subsection

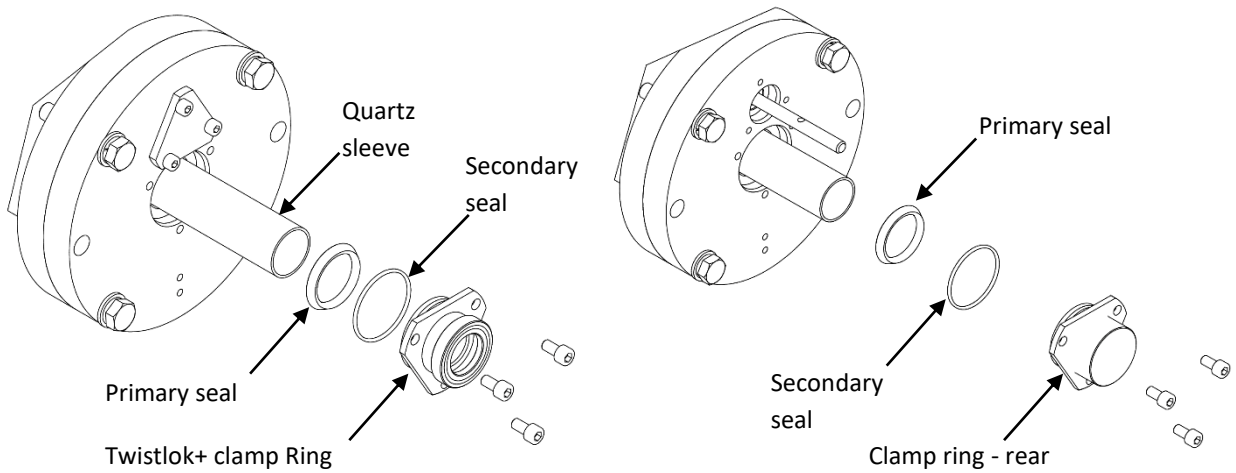

UV Sensor Maintenance

UV Sensor Housing Maintenance

Please refer to the Health & Safety Section at beginning of the manual for Symbol explanations. These are to be adhered to when carrying out the following maintenance procedures.

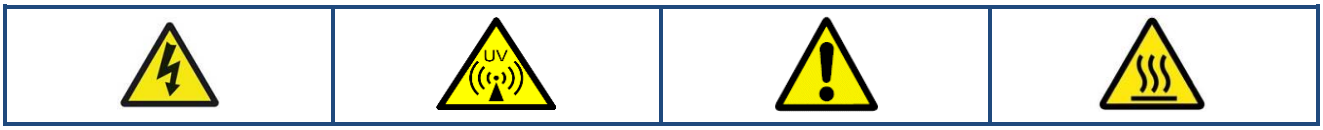

UV Sensor Housing Removal		
	AT-463 & AT-605 UV Probe Installed	AT-900 UV Probe Installed
1	Unscrew UV probe cable connector	
2	Unscrew UV probe and remove.	Unscrew UV probe adapter and remove the probe. Unscrew the UV Probe Housing from the window housing.
3	Unscrew the three screws and remove the window housing.	
4	Remove the upper window seal and carefully extract the window. If the window does not easily come out gently twist the window to break the lower seal. Remove the lower O' ring seal.	

UV Sensor Housing Installation		
	AT-463 & AT-605 UV Probe Installed	AT-900 UV Probe Installed
Before inserting a new/cleaned validated sensor quartz window, ensure all components are clean and dry. Ensure that no dirt or debris gets onto the UV sensor or quartz window as this may affect readings.		
1	Insert the lower 'O' ring seal. Carefully insert the new quartz window. Insert the upper 'O' ring seal.	
2	Replace the window housing, ensuring that the seal is correctly positioned. Install the screws only finger tight initially. **Tighten the screws in a radial pattern, each one a quarter turn at a time until tight.**	
3	Screw the UV Probe back onto the window housing.	Screw the UV Probe Housing onto the window housing. Insert the UV probe and screw the UV adapter to secure the UV probe
4	Connect the UV probe lead and screw down to fasten.	

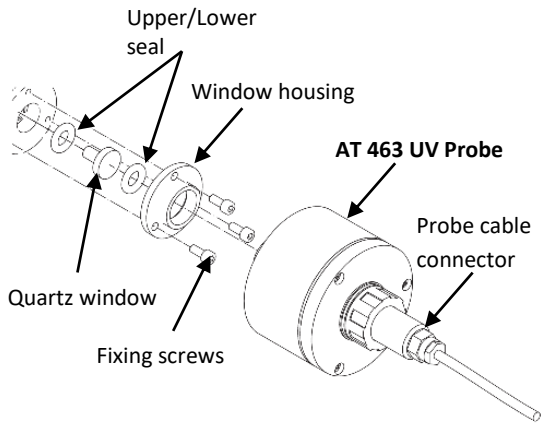

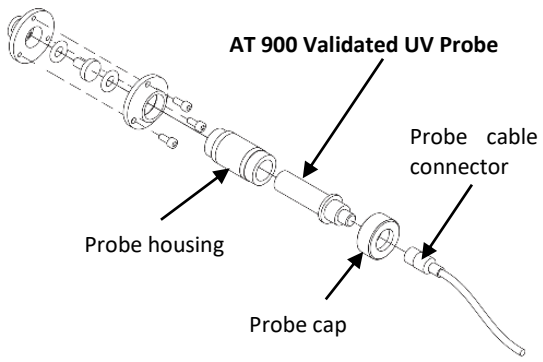

Automatic Wiper System Maintenance

Wiper Cover and Motor Maintenance

Please refer to the Health & Safety Section at beginning of the manual for Symbol explanations. These are to be adhered to when carrying out the following maintenance procedures.

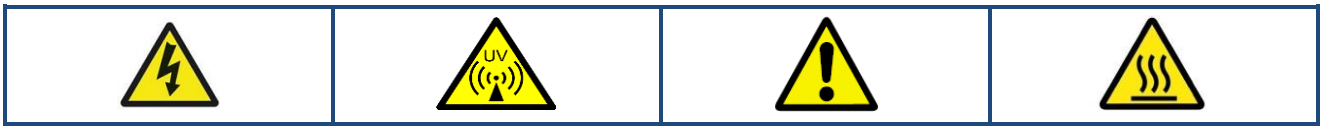

Wiper Cover & Motor Removal	
1	Unscrew the nylon nuts, remove small 'O' rings and remove the cover.
2	Disconnect the electrical connections on the motor, taking note of the cable positions. Unscrew the pillar retaining screws and the sensor cam coupling grub screw.
3	Remove the motor assembly.

Wiper Motor & Cover Installation	
1	Reinstall the Sensor Cam coupling on the wiper shaft. Install the motor assembly in the original position. Check that the motor shaft is located in the Sensor cam coupling.
2	Attach the wiper pillars using screws and tighten the Sensor cam coupling grub screw to connect the Wiper and motor shafts together.
3	Refit the wiper motor cover, and fasten with the seals and nylon nuts.

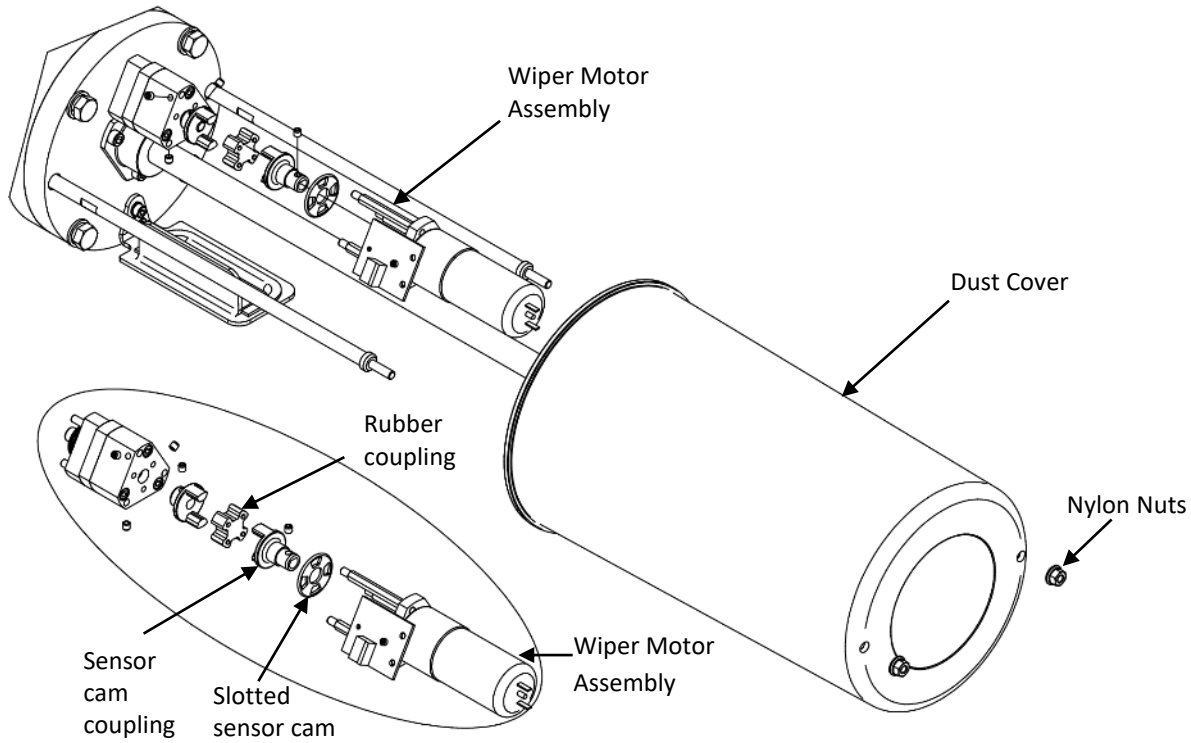

Wiper Bearing & Seal Maintenance

Please refer to the Health & Safety Section at beginning of the manual for Symbol explanations. These are to be adhered to when carrying out the following maintenance procedures.

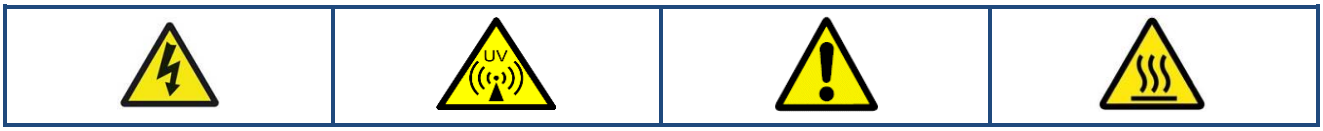

Wiper Bearing & Seal Removal	
1	Remove the motor assembly (see **Wiper Cover & Motor Removal** procedures)
2	Remove the grub screw and slide off the the coupling.
3	Unscrew the 3 bolts and remove the bearing housing. Remove the Bearing for inspection.
4	Remove nut and screw from the Thrust bush and slide it off the wiper shaft. Remove the Inner Bearing Housing screws and then remove the inner bearing housing and bearing.
5	Remove the seal housing and quad ring seals for inspection.

Wiper Bearing & Seal Installation	
Ensure that new seals are always installed when maintenance is carried out and the bearings are in good condition and oil if necessary.	
1	Insert Quad Ring Seal/Backing Ring/Quad Ring Seal into one side of the seal Housing and Quad Ring on the other side **WARNING: These components must be greased!** Slide the assembly on to the wiper shaft.
2	Replace the Inner Bearing Housing and bearing. Replace the three bolts into the inner bearing housing.
3	Replace the thrust bush and line up the fixing hole; fasten with the screw down.
4	Replace the Outer Bearing Housing and bearing and secure with bolts
5	Reinstall the coupling and secure with the grub screw. Check that the shaft can be turned by hand, It should feel tight but be movable by hand.

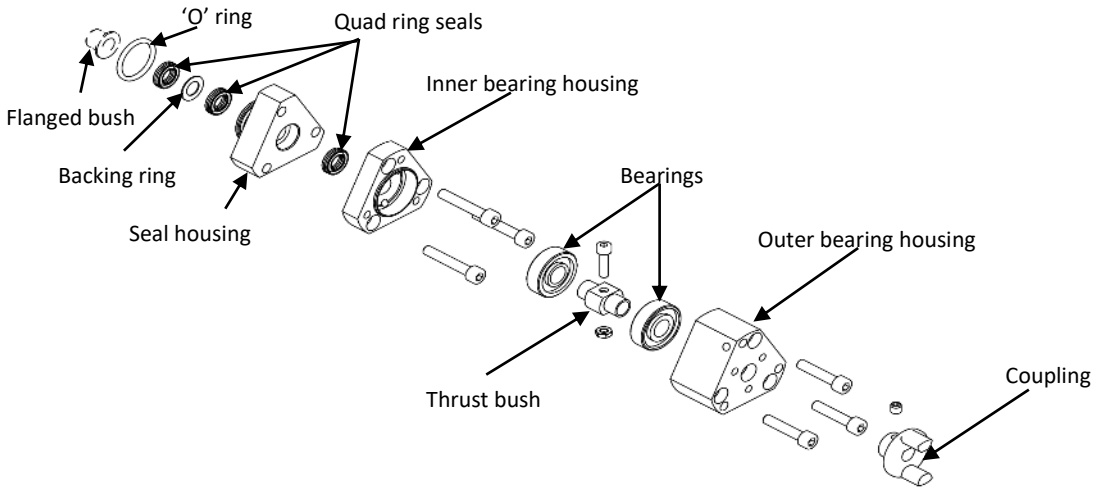

Wiper Blade Maintenance

Please refer to the Health & Safety Section at beginning of the manual for Symbol explanations. These are to be adhered to when carrying out the following maintenance procedures.

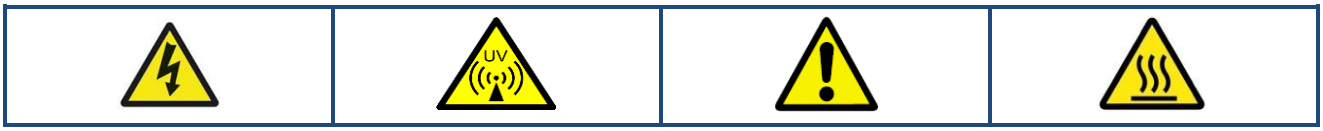

Wiper Blade Removal	
1	Remove the motor assembly (refer to **Wiper Cover & Motor Removal** & **Wiper Bearing & Seal Removal** procedures).
2	Remove the UV Lamps, UV sensors and Quartz sleeves (refer to **UV Lamp Extraction** & **Quartz Extraction** procedures)
3	Unscrew the flange retaining bolts. This will allow the flange, the wiper carriage & the ACME shaft to be removed. For larger flanges, use the slider bars

Wiper Blade Installation	
1	Replace the old wiper blades with the new blades and fit them accordingly.
2	Slide the drive side flange, the wiper carriage & the AMCE shafts back into the chamber & fix back in place with the flange retaining bolts (check the 'O' seal to see if needs to be replaced).
3	The Quartz sleeves and UV Lamp should be replaced (refer to **UV Lamp installation, & Quartz Installation** procedures).
4	Re-fit the wiper motor assembly (refer to **Wiper bearing & Seal Installation & Woper Motor & Cover Installation** procedures).
5	If the carriage has not been moved then there should be no need to recalibrate the wiper. If the carriage has been moved, recalibration of the wiper is imperative (refer to **Automatic Wiper** section of the manual).

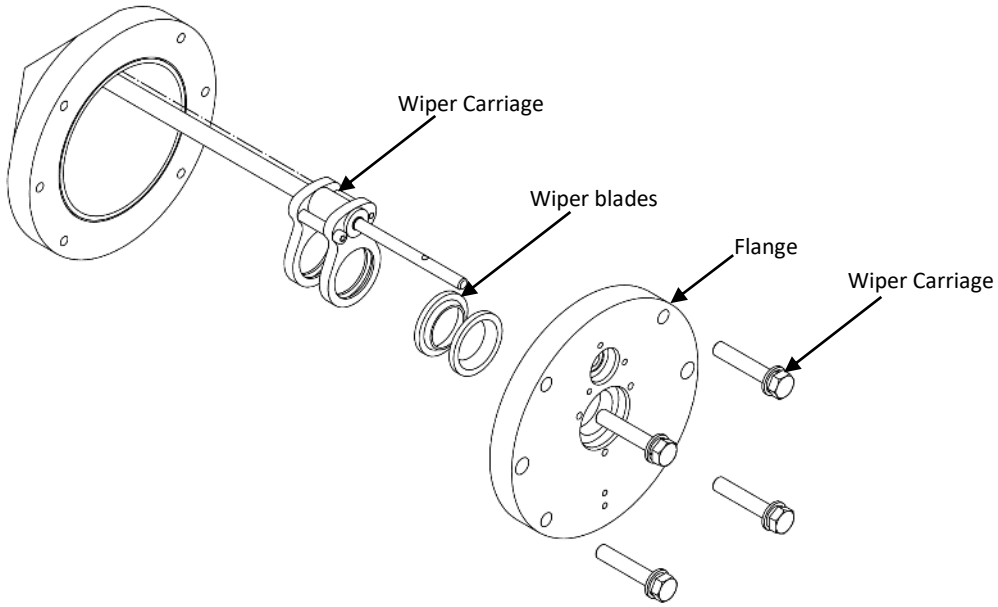

Wiper Body Maintenance

Please refer to the Health & Safety Section at beginning of the manual for Symbol explanations. These are to be adhered to when carrying out the following maintenance procedures.

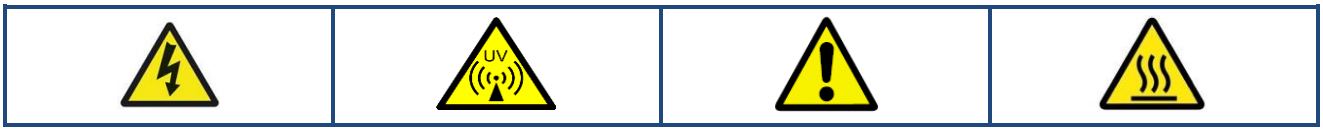

Wiper Body Removal	
1	Remove the motor assembly (refer to **Wiper Cover & Motor Removal & Wiper Bearing & Seal Removal** procedures).
2	Remove the UV Lamps, UV sensors and Quartz sleeves (refer to **UV Lamp Extraction, & Quartz Extraction** procedures)
3	Unscrew the flange retaining bolts. This will allow the flange, the wiper carriage & the ACME shaft to be removed.
4	Remove the circlip from one side of the wiper shaft and unscrew the wiper carriage assembly from the wiper shaft.
5	Unscrew the wiper carriage from one side of the wiper body lid. Remove one side of the wiper body lid by removing the wiper body screws.

Wiper Body Installation	
1	Replace Lead Screw Nut (if required) and insert inside the Wiper Body.
2	Screw is place both Wiper Body Lid's on either side of the Wiper Body ensureing the O'Ring Seal and flanged bush are between.
3	Screw in the place Wiper Carriage onto one side of the Wiper Lid.
4	Screw the Wiper Assembly back onto the Wiper Shaft, ensuring to clip the circlips back in place on the ends of the shaft.
5	Re-calibration of the wiper is required after Wiper body removal (refer to **Automatic Wiper** procedures).

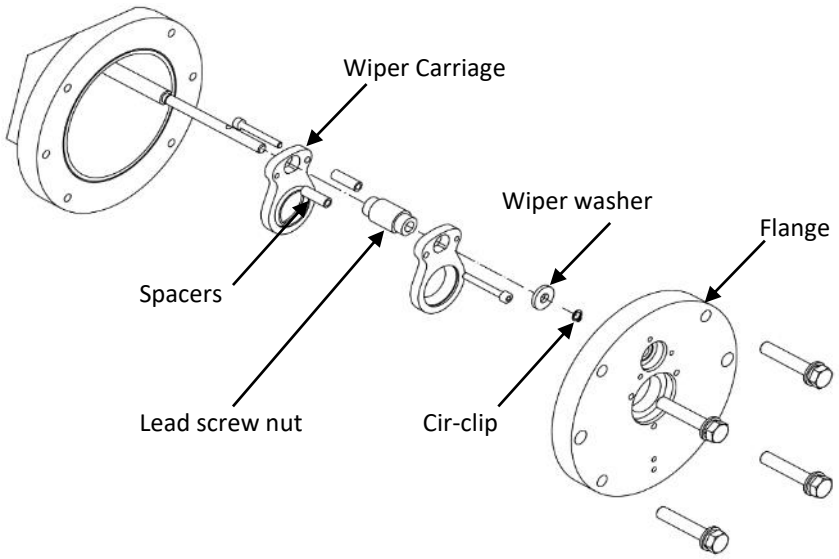

Wiper Blade Maintenance

Please refer to the Health & Safety Section at beginning of the manual for Symbol explanations. These are to be adhered to when carrying out the following maintenance procedures.

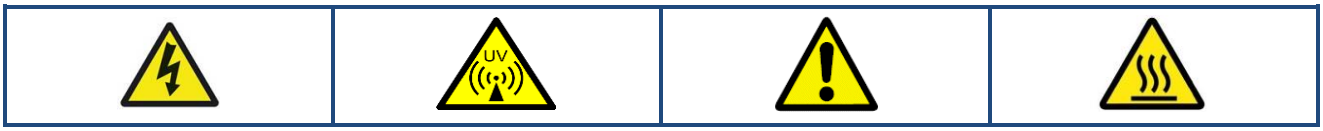

Wiper Blade Removal	
1	Remove the motor assembly (refer to **Wiper Cover & Motor Removal** & **Wiper Bearing & Seal Removal** procedures).
2	Remove the UV Lamps, UV sensors and Quartz sleeves (refer to **UV Lamp Extraction** & **Quartz Extraction** procedures)
3	Unscrew the flange retaining bolts. This will allow the flange, the wiper carriage & the ACME shaft to be removed. For larger flanges, use the slider bars

Wiper Blade Installation	
1	Replace the old wiper blades with the new blades and fit them accordingly.
2	Slide the drive side flange, the wiper carriage & the AMCE shafts back into the chamber & fix back in place with the flange retaining bolts (check the 'O' seal to see if needs to be replaced).
3	The Quartz sleeves and UV Lamp should be replaced (refer to **UV Lamp installation, & Quartz Installation** procedures).
4	Re-fit the wiper motor assembly (refer to **Wiper bearing & Seal Installation & Woper Motor & Cover Installation** procedures).
5	If the carriage has not been moved then there should be no need to recalibrate the wiper. If the carriage has been moved, recalibration of the wiper is imperative (refer to **Automatic Wiper** section of the manual).

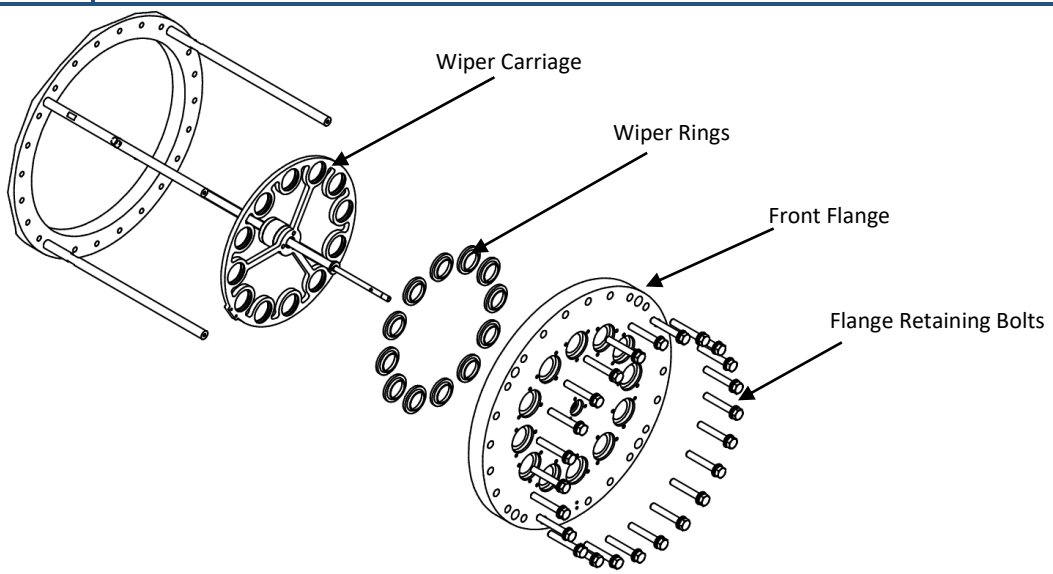

Manual Wiper System Maintenance

Manual Wiper Drive Seal Maintenance

Please refer to the Health & Safety Section at beginning of the manual for Symbol explanations. These are to be adhered to when carrying out the following maintenance procedures.

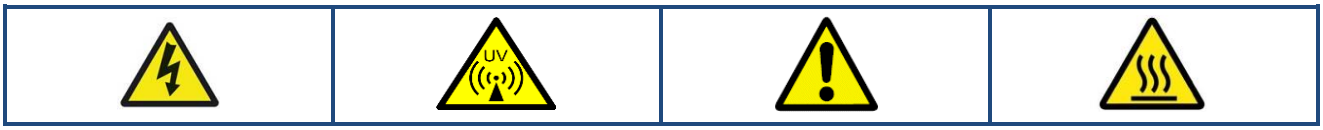

Wiper Drive Removal	
1	Unscrew the knob off the end of the manual wiper-operating shaft.
2	Unscrew the knurled nut off the end of the manual wiper support.
3	Remove the old ‘O’ seal by sliding it down the manual wiper shaft.

Wiper Drive Installation	
1	Fit the new ‘O’ seal by sliding it down the manual wiper shaft & into the ‘O’ seal recess.
2	Refit the knurled nut onto the end of the manual wiper support.
3	Refit the knob onto the end of the manual wiper-operating shaft.

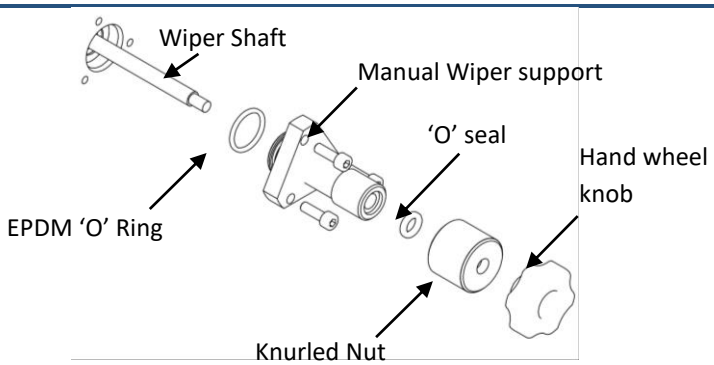

Spare Parts

General Assembly

Note: Typical of a UVLA-120-4-2

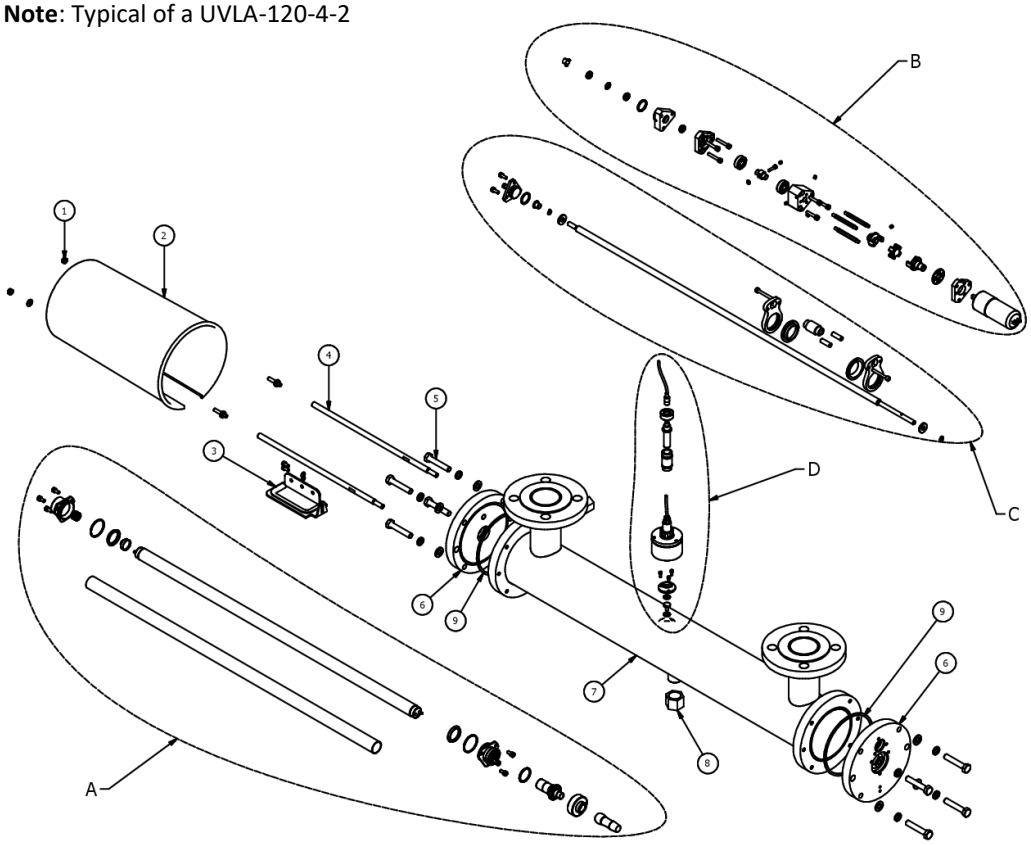

ITEM	PART NO.	DESCRIPTION
A	Lamp & Quartz Assembly	
B	Automatic/Manual Wiper Drive Assembly	
C	Automatic Wiper Carriage Assembly	
D	UV Sensor Assembly	
Note: the sizes of parts in this assembly will vary according to chamber size		
1	-	Nylon Nuts
2	-	Dust Cover
3	-	Gland Plate
4	-	Slider bars
5	-	Flange retaining screws
6	-	Open flange
7	-	Chamber body
8	-	Hex Cap
9	Refer to Maintenance Spares List	Flange O'Ring Seal

Quartz & Lamp Assembly

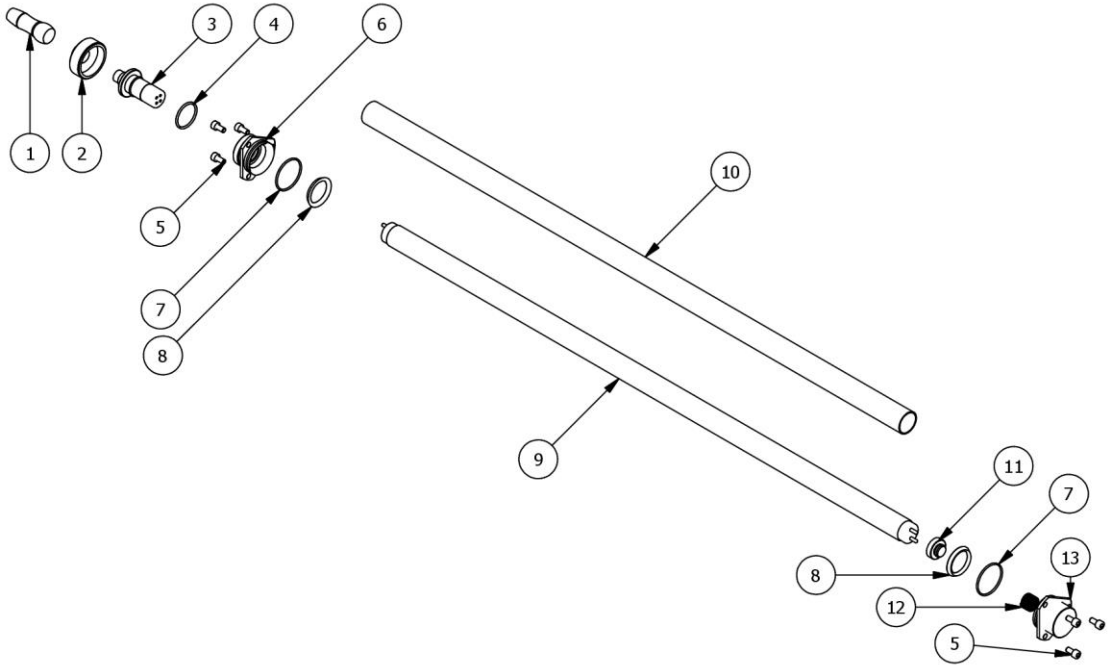

ITEM	PART NO.	DESCRIPTION
1	-	TwistLok+ Plug & Lead – Q30
2	W9101030	Clamp Ring - Screwed - Retainer - Q30
3	W9101015	TwistLok+ Connector Q30
4	W3200260	EPDM 'O' Ring
5	-	M5 x 16 Sckt head bolt
6	W9101020	Clamp Ring - Screwed
7	Refer to Maintenance Spares List	EPDM 'O' Ring (Secondary)
8	Refer to Maintenance Spares List	EPDM 'O' Ring 30 x 5.0 (Primary)
9	Refer to Maintenance Spares List	UV Lamp
10	Refer to Maintenance Spares List	Lamp Quartz Sleeve
11	W9101050	Lamp Soft Seat - Q30
12	W9102040	SS Spring
13	W9101040	Clamp Ring – Rear

UV Sensor Assembly

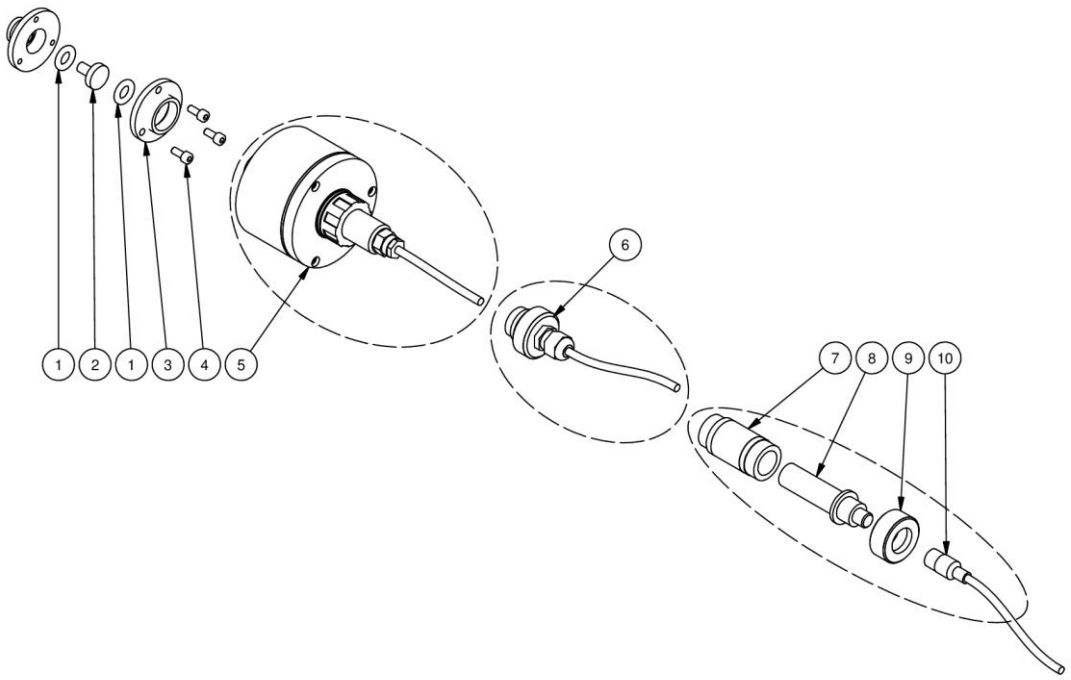

ITEM	PART NO.	DESCRIPTION
1	Refer to Maintenance Spares List	EPDM 'O' Ring
2	Refer to Maintenance Spares List	Quartz Window (Top Hat)
3	W8010005	UV Probe Housing - Loose Section
4	-	M5 x 12 Sckt Head Bolt
AT 463 Probe Only		
5	W616300	AT-463 UV Probe
AT 605 Probe Only		
6	W6168150	AT-605 UV Probe
AT 900 Validated UV Probe		
6	W8000300	Probe Adaptor Base
7	Refer to Data-book	AT 900 Validated UV Probe (ONORM)
8	W8000305	Probe Adaptor Cap
9	-	Probe Connector & Cable

Automatic Wiper Drive Assembly

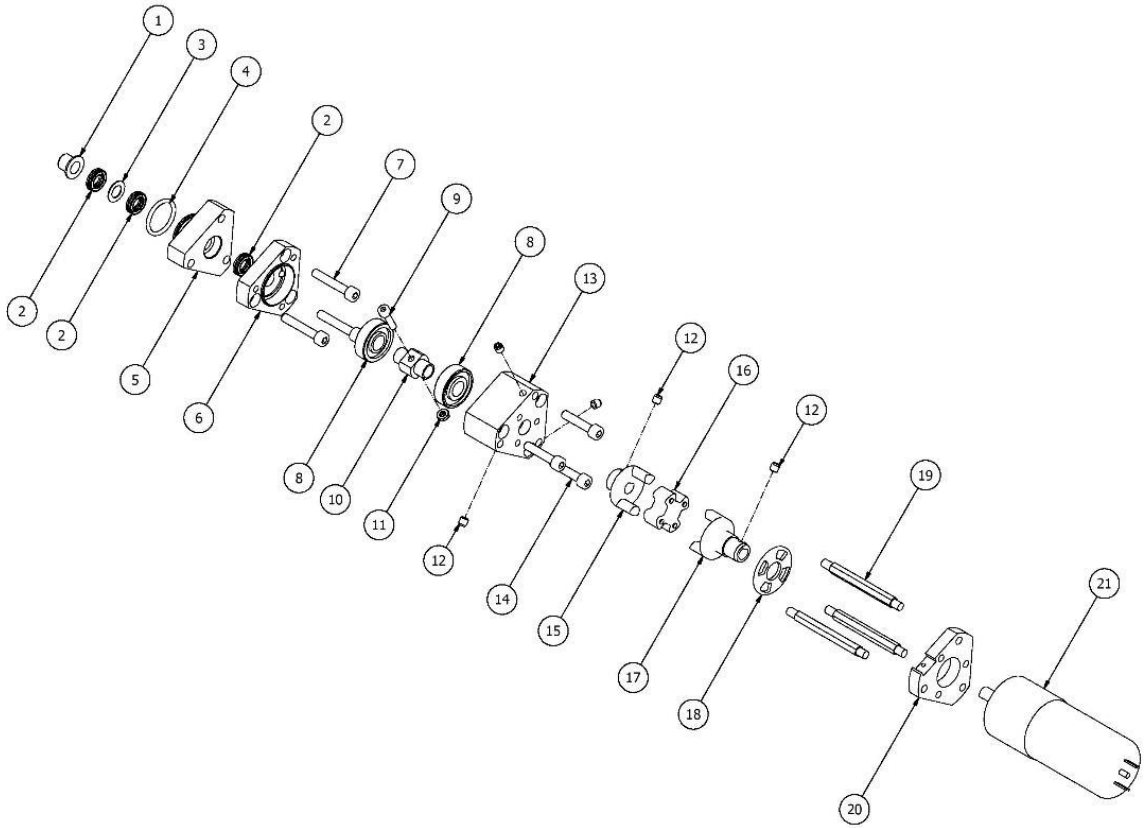

ITEM	PART NO.	DESCRIPTION
1	W5410398	Flanged Bush
2	Refer to Maintenance Spares List	Nitrile Quad Ring
3	Refer to Maintenance Spares List	PTFE Backing Ring
4	Refer to Maintenance Spares List	EPDM 'O'Ring
5	W5415040	12mm Shaft - Seal Housing
6	W5415050	12mm Shaft - Bearing Housing No1
7	-	M5 x 25 Sckt Head Bolt
8	- W5410071	Angular Contact Ball Bearing
9	-	M4 x 16 Sckt Head Bolt
10	W5415070	12mm Shaft - Lead Screw Thrust Bush
11	-	M4 Nylon Nut
12	-	M5 x 5 Hex Grub Screw
13	W5415060	12mm Shaft - Bearing Housing No2
14	-	M5 x 30 Sckt Head Bolt
15	W5415100	12mm Shaft - Coupling Shaft
16	W5411002	Wiper Motor Rubber Coupling
17	W5415110	12mm Shaft - Coupling Motor
18	W5415120	12mm Shaft - Sensor Cam
19	W5415080	12mm Shaft - Mounting Pillar
20	W5415090	12mm Shaft - Motor Fixing Plate
21	W4921670	Wiper Motor

Manual Wiper Drive Assembly

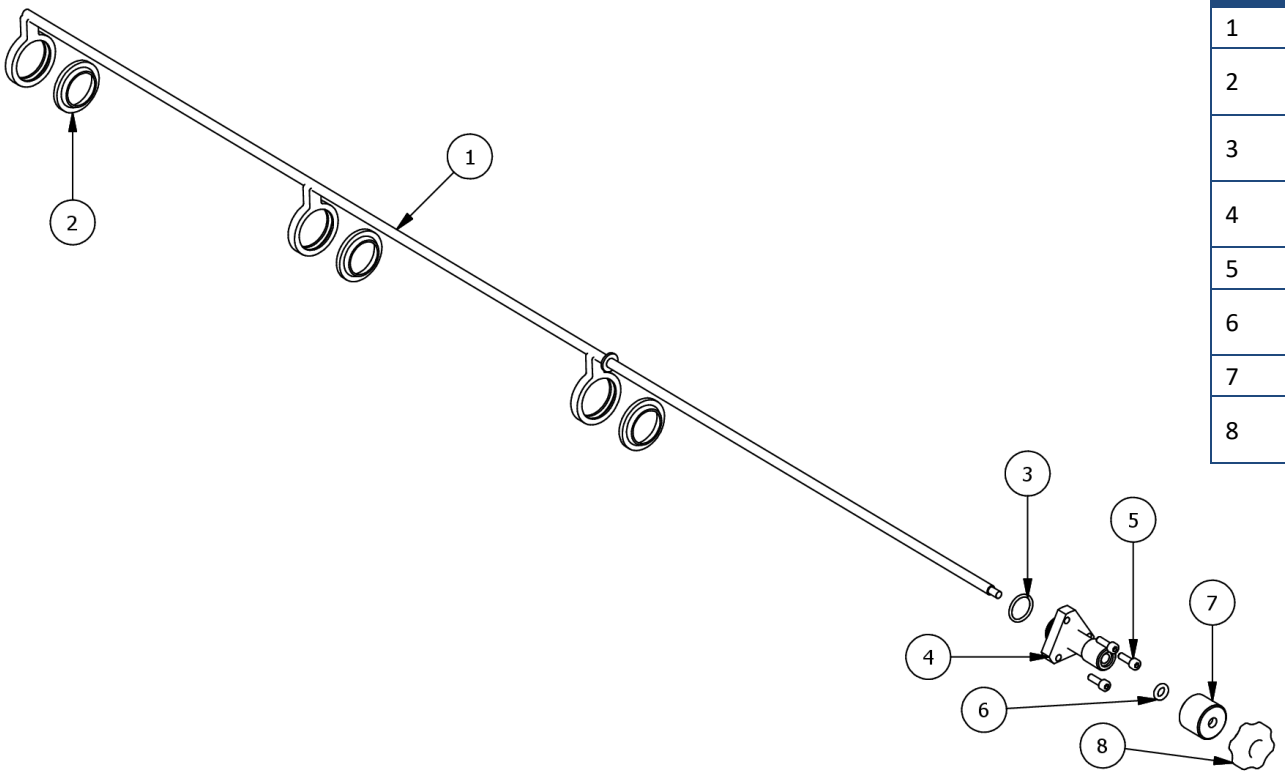

ITEM	PART NO.	DESCRIPTION
1	-	Wiper shaft
2	Refer to Maintenance Spares List	30-Dia Wiper Rings
3	Refer to Maintenance Spares List	EPDM 'O' Ring
4	W5420012	Manual Wiper Triangle Housing
5	-	M6 x 20 Sckt Head
6	Refer to Maintenance Spares List	EPDM 'O' Ring (manual wiper)
7	W5420011	Knurled Lock Nut
8	W4051350	Female scallop hand wheel knob

Automatic Wiper Carriage Assembly

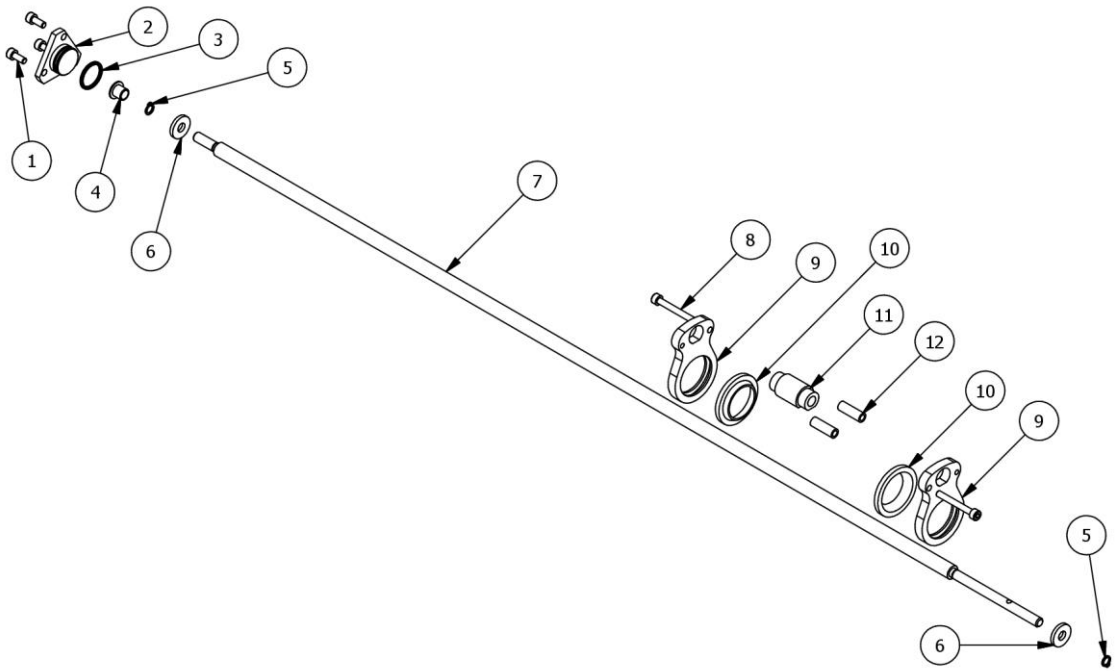

ITEM	PART NO.	DESCRIPTION
1	-	M5 x 12 Sckt Head
2	W5415130	12mm Shaft - Seal Housing Plug
3	Refer to Maintenance Spares List	EPDM 'O' Ring
4	W5410398	Flanged Bush
5	W5415140	12mm Shaft - Wiper External Eclip
6	W5415030	12mm Shaft - Wiper Washer
7	-	ACME Wiper Shaft
8	-	M5 x 40 Sckt Head Screw
9	W5450022	Single Lamp Wiper Carriage
10	Refer to Maintenance Spares List	30-Dia Wiper Rings
11	Refer to Maintenance Spares List	Wiper Carriage Lead Screw Nut
12	W5410018	Wiper Carriage Plate Distance Sleeve

Automatic Wiper Carriage Assembly (Multi-Lamp Systems)

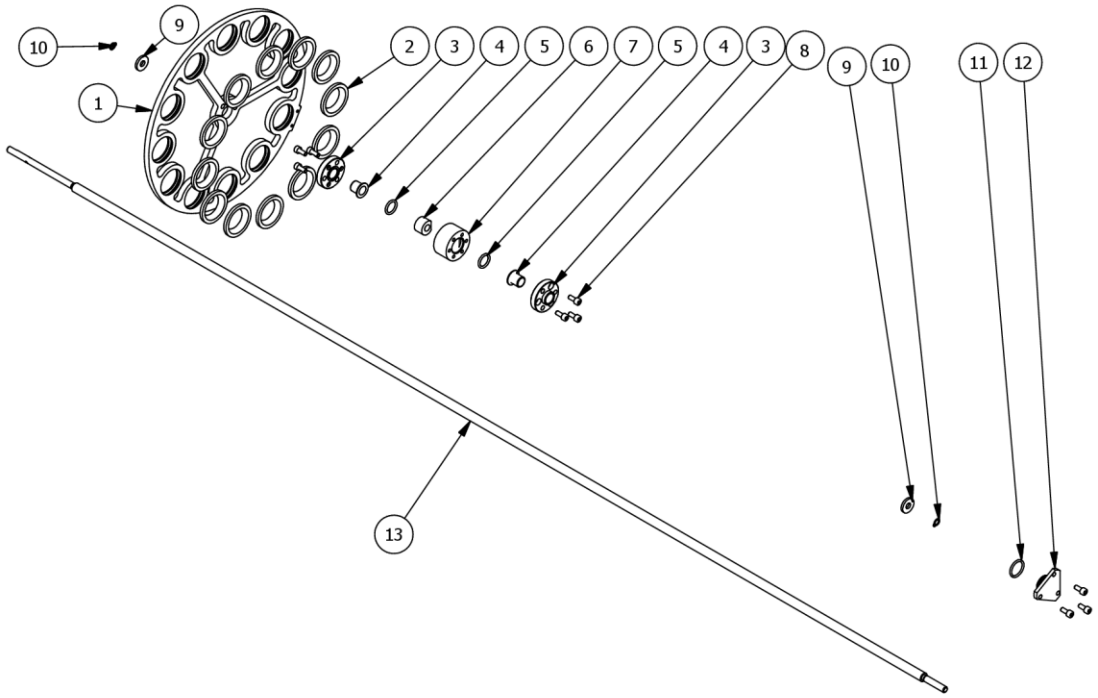

ITEM	PART NO.	DESCRIPTION
1	-	Multi-Lamp Wiper Carriage
2	Refer to Maintenance Spares List	30-Dia Wiper Rings
3	W5415010	12mm Shaft - Wiper Body Lid
4	W5410400	12mm - Flanged Bush
5	Refer to Maintenance Spares List	Lead Screw Nut
6	Refer to Maintenance Spares List	EPDM 'O' Ring
7	W5415000	12mm Shaft - Wiper Body
8	M5 x 10 Sckt Head Bolt	M5 x 10 Sckt Head Bolt
9	W5415030	12mm – Wiper Washer
10	W5415140	12mm - Circlips Retaining Washer
11	Refer to Maintenance Spares List	EPDM 'O' Ring
12	W5415130	12mm Shaft - Seal Housing Plug
13	-	ACME Wiper Shaft

Maintenance Spares List

ITEM	PART NO.	DESCRIPTION	UVLA-120-4	UVLA-200-4	UVLA-200-6	UVLA-200-8	UVLA-340-4	UVLA-340-6	UVLA-340-8	UVLA-2200-6	UVLA-3200-8	UVLA-3340-8	UVLA-4200-8	UVLA-4340-8	UVLA-6340-10	UVLA-6340-8	UVLA-8340-10	UVLA-8340-12	UVLA-10340-10	UVLA-12340-12	UVLA-14340-14	UVLA-16340-14	UVLA-18340-14	UVLA-20340-14	UVLA-22340-20	UVLA-24340-20	UVLA-26340-20	UVLA-28340-20	UVLA-30340-20	UVLA-32340-20
General Assembly																														
9	W3400170	EPDM 'O' Ring 129.5 x 3 (4")	2	2			2																							
9	W3400185	EPDM 'O' Ring 179.5 x 3 (6")			2			2		2																				
9	W3300360	EPDM 'O' Ring 229.3 x 5.7 (8")				2			2		2	2	2	2		2														
9	W3300450	EPDM 'O' Ring 279.3 x 5.7 (10")													2		2		2											
9	W3400180	EPDM 'O' Ring 339.5 x 5.7																2		2										
9	W3300700	EPDM 'O' Ring 379.3 x 5.7 (14")																			2	2	2	2						
9	W3300920	EPDM 'O' Ring 509.3 x 5.7 (20")																							2	2	2	2	2	2
Lamp & Quartz Assembly																														
7	W3200370	EPDM 'O' Ring 40 x 2.0 V70	2	2	2	2	2	2	2	4	6	6	8	8	12	12	16	16	20	24	28	32	36	40	44	48	52	56	60	64
8	W3200250	EPDM 'O' Ring 30 x 5.0 V70	2	2	2	2	2	2	2	4	6	6	8	8	12	12	16	16	20	24	28	32	36	40	44	48	52	56	60	64
9	W1000650	UV Lamp LP60SS																												
9	W1000900	UV Lamp LP120SS15 WEE/FC0081UW	1																											
9	W1001100	UV Lamp LP200SS19 WEE/FC0081UW		1	1	1				2	3		4																	
9	W1001350	UV Lamp TUV 340W XPT HO					1	1	1			3		4	6	6	8	8	10	12	14	16	18	20	22	24	26	28	30	32
10	W2010130	Quartz Sleeve QSL-30 x 500																												
10	W2010210	Quartz Sleeve QSL-30 x 920	1																											
10	W2010350	Quartz Sleeve QSL-30 x 1197		1	1	1				2	3		4																	
10	W2010480	Quartz Sleeve QSL 30 x 1620					1	1	1			3		4	6	6	8	8	10	12	14	16	18	20	22	24	26	28	30	32

ITEM	PART NO.	DESCRIPTION	UVLA-120-4	UVLA-200-4	UVLA-200-6	UVLA-200-8	UVLA-340-4	UVLA-340-6	UVLA-340-8	UVLA-2200-6	UVLA-3200-8	UVLA-3340-8	UVLA-4200-8	UVLA-4340-8	UVLA-6340-10	UVLA-6340-8	UVLA-8340-10	UVLA-8340-12	UVLA-10340-10	UVLA-12340-12	UVLA-14340-14	UVLA-16340-14	UVLA-18340-14	UVLA-20340-14	UVLA-22340-20	UVLA-24340-20	UVLA-26340-20	UVLA-28340-20	UVLA-30340-20	UVLA-32340-20
UV Sensor Assembly																														
1	W3400157	EPDM 'O' Ring 13 x 3.5 Window Seal (QWS-20)	2	2	2	2	2	2	2	2	2	2	2	2	2	2	2	2	2	2	2	2	2	2	2	2	2	2	2	2
2	W2900320*	Quartz Window QWI 20 x 15 x 5 (Top Hat)	1	1	1	1	1	1	1	1	1	1	1	1	1	1	1	1	1	1	1	1	1	1	1	1	1	1	1	1
Automatic Wiper Drive Assembly																														
2	W3500100	Nitrile Quad Ring 7.52 x 3.53	3	3	3	3	3	3	3	3	3	3	3	3	3	3	3	3	3	3	3	3	3	3	3	3	3	3	3	3
3	W3500105	PTFE Backing Ring 13.9OD x 8.1ID x 0.5Thk	1	1	1	1	1	1	1	1	1	1	1	1	1	1	1	1	1	1	1	1	1	1	1	1	1	1	1	1
4	W3200025	EPDM 'O' Ring 21 x 2.0 V70	1	1	1	1	1	1	1	1	1	1	1	1	1	1	1	1	1	1	1	1	1	1	1	1	1	1	1	1
Manual Wiper Drive Assembly																														
2	W3400450	30-Dia Wiper Rings in 80 Shore EPDM	1	1	2	1	1	1	1	2	3	3	4	4	6	6	8	8	10	12	14	16	18	20	22	24	26	28	30	32
3	W3200100	EPDM 'O' Ring 24.99 x 3.53 (SS-24)	1	1	1	1	1	1	1	1	1	1	1	1	1	1	1	1	1	1	1	1	1	1	1	1	1	1	1	1
6	W3400195	EPDM 'O' Ring 8 x 3.0 V70 (Manual Wiper)	1	1	1	1	1	1	1	1	1	1	1	1	1	1	1	1	1	1	1	1	1	1	1	1	1	1	1	1
Automatic Wiper Carriage Assembly																														
**	W3100160	EPDM 'O' Ring 15 x 2.5 V70								2	2	2	2	2	2	2	2	2	2	2	2	2	2	2	2	2	2	2	2	2
3	W3200025	EPDM 'O' Ring 21 x 2.0 V70	1	1	1	1	1	1	1	1	1	1	1	1	1	1	1	1	1	1	1	1	1	1	1	1	1	1	1	1
10	W3400450	30-Dia Wiper Rings in 80 Shore EPDM	1	1	2	1	1	1	1	2	3	3	4	4	6	6	8	8	10	12	14	16	18	20	22	24	26	28	30	32
11	W5410016	SP Wiper Carriage Lead Screw Nut	1	1	1	1	1	1	1																					
11	W5415020	12mm Shaft - Lead Screw Nut								1	1	1	1	1	1	1	1	1	1	1	1	1	1	1	1	1	1	1	1	1

ATUV-1040 Automatic Quartz Wiping System

IMPORTANT: This section of the manual is only applicable to systems that have an Automatic Wiping Mechanism installed on the chamber. If you are unsure whether your system has an Automatic Wiper Mechanism installed, please contact **atg UV Technology**.

General Operation

The ATUV-1040 module controls the operation of the automatic wiping mechanism. The system uses an infra-red optical sensor and a slotted disc connected to the wiper motor shaft to detect pulses of infra-red light as the shaft turns. The light pulses are converted to an electrical signal allowing the system to count the number of pulses and determine the length of the chamber and know the wiper's exact position within the chamber.

Upon applying power to the wiper module, a calibration check is performed. If the system is not calibrated, the module waits for the calibration process to be initiated. If the system is calibrated, the wiper will run automatically at a user-defined frequency.
If power is removed during a run, the wiper will resume running immediately when power is restored.

LED Indicators & Push Buttons



LED/Push Button	Description
OTPO PULSE (Optical Sensor Detector)	This LED is in series with the optical sensor's infra-red detector and will pulse on/off when the wiper motor shaft turns. **Note**: When the wiper motor is not running, this LED could be either OFF or ON depending on the position of the slotted disc relative to the optical sensor.
OPTO HTHY (Optical Sensor Emitter)	This LED is in series with the optical sensor's infra-red emitter and will be permanently lit when the emitter is functioning correctly.
LINK (Emergency Stop)	This LED will be on when the emergency stop input is active (closed). This LED ***MUST*** be on for the wiper motor to operate (run or calibrate).
STATUS (System Healthy/Fault Status)	This LED shows the following states: LED Off – System not calibrated. Slow Flash (once/second) – Wiper motor stalled or optical sensor failed. Fast Flash (5 times/second) – Wiper motor current has exceeded the trip current setting. LED Permanently On – System is healthy and calibrated.
CAL (Calibrate)	Press and hold for more than 0.5 seconds to initiate the calibration process.
RUN (Force Run)	Pressing this button for between 0.2s and 2s initiates a run. Pressing this button for between 4s and 6s initiates a run to the service position. **Note:** A run cannot be initiated unless the system is calibrated.

Connection Diagrams



Terminal	Description
1	No Connection
2	Optical Sensor Common
3	Optical Sensor Emitter
4	Optical Sensor Detector
5	Wiper Motor Positive
6	Wiper Motor Negative
7	Emergency Stop Input 1
8	Emergency Stop Input 2
9	Run/Calibrate Input 1
10	Run/Calibrate Input 2
11	System Healthy Output (Relay N/O contact)
12	System Healthy Output (Relay COM contact)

Important! The Motor and Optical Sensor connections are polarity conscious; care should be taken to ensure they are wired correctly at the terminals.

Note! The Emergency Stop and Run/Calibrate inputs are volt-free and are activated by connecting their respective inputs (1 & 2) together by a switch or relay.

Note! The system output relay is energised (contacts closed) when the system is healthy and calibrated.

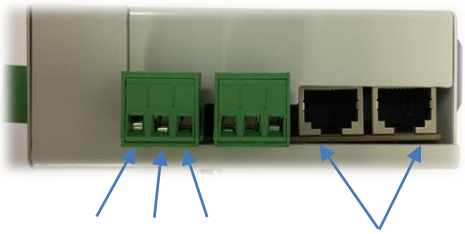

DIP-Switch Settings

DIPSW1 – System Setup Dip-Switch



This switch allows the operator to setup the wiper system to function correctly and with the correct wiping frequency.
It also allows the operator to calibrate the wiper system

DIP 1 - 3 - Wiping Frequency Setup

Frequency	Never *	15 Mins	30 Mins	1 hour	2 Hours	6 Hours	12 Hours	24 Hours
DIP1	OFF	OFF	OFF	OFF	ON	ON	ON	ON
DIP2	OFF	OFF	ON	ON	OFF	OFF	ON	ON
DIP3	OFF	ON	OFF	ON	OFF	ON	OFF	ON

***** If the Frequency is set to 'Never' (DIP1-3 = OFF), this allows the frequency of the wiper to be controlled via the Control System's Wiper Run Interval Parameter (Refer to Control Operation section of the Manual).

Important! DIP Switches 4 – 8 are for internal use only and should not be altered.

Calibration

For correct operation, the wiper must first be calibrated. Calibration allows the wiper module to determine the length of the chamber and park the wiper at the home position at one end of chamber. The calibration process is automatic but must be initiated in one of the following ways:

1. Send a Calibrate Command via the **Spectra** Control System Interface (Refer to Control Operation Section of Manual).
2. Pressing the calibrate button on the wiper module.
3. Activate the wiper module's Run/Calibrate digital input for between 4 and 6 seconds.

Once calibration is initiated, the status LED is extinguished and the wiper moves toward the end of the chamber nearest the home position. The optical detector LED will flash. Once the wiper reaches the end, the wiper's direction of travel is reversed and the wiper moves toward the opposite end of the chamber, recording the chamber's length as it travels. Once the opposite end of the chamber is reached, the wiper's direction of travel is reversed once again and the wiper moves back to the home position. On successful calibration, the status LED will be permanently lit and the system healthy relay energised (normally-open contacts will close).

Run

A run will automatically occur periodically once the wiper module is calibrated. The run frequency is determined by either the Wiper Run Interval parameter on Control Interface (Refer to Control Operation section of Manual), or SW1, SW2 and SW3 (see Section 'DIP Switch Settings').
A run can also be initiated in one of the following ways:

1. Send a Calibrate Command via the Control System Interface (Refer to Control Operation Section of Manual).
2. Pressing the run button on the wiper module
3. Activate the wiper module's Run/Calibrate digital input for between 0.2 and 2 seconds or for more than 8 seconds respectively

Note! Any attempt to initiate a run whilst the system is not calibrated or a run is already in progress is ignored.

Service Position

To facilitate removal of UV lamps during servicing, the wiper can be moved to a position 1/3rd along the chamber length from the home position in one of the following ways:

1. Press the RUN button on the wiper module for between 4 and 6 seconds.
2. Send a service command to the wiper module over the MODBUS communication interface (Refer to Control Operation section of the Manual)

TroubleShooting

Note: If a wiper fault is to occur, the Spectra II Membrane interface will display 'Wiper Fault'. By pressing enter on this message, the fault can be diagnosed in more detail by pressing Enter.

Fault Description	Possible Cause	Possible Solution
Not Calibrated	Wiper has lost its calibrated memory The wiper has been put into service mode (STATUS LED is extinguished)	Follow Calibration Procedures (initiated in 3 possible ways)
Motor Current Trip	ATUV-1040 has detected an over current (STATUS LED Fast Flashing - 5 times/second). - Wiper mechanism is jammed. - Calibration has been lost/corrupted	Ensure the internal/external wiper parts are not causing the wiper jam/seize. The wiper shaft should be able to be rotated by hand Re-calibrate the Wiper
Loss Of Pulses	ATUV-1040 has detected a Loss of pulses error (STATUS LED Fast Flashing - 1 times/second). - **OPTO PULSE LED** does not flash when motor is turning	Check dust cover is in position. (Direct sunlight or a bright light can blind the opto sensor) Ensure the opto sensor is correctly positioned over the cam Ensure the motor is running when attempting a sweep.
Safety Stop	LINK LED on the ATUV-1040 has extinguished - LINK signal has been removed	Ensue the LINK signal is re-established and the LINK LED is illuminated
No Motor Current	The ATUV-1040 module is not measuring any current from the motor	Ensure the connections to the motor are properly installed Ensure the motor turns when 24Vdc is applied.
No Pulses	**OPTO PULSE LED** does not flash when motor is turning	Check dust cover is in position. (Direct sunlight or a bright light can blind the opto sensor) Ensure the opto sensor is correctly positioned over the cam Ensure the motor is running when attempting a sweep.
Minimum Chamber Length	Calibrated length is less than the pre-determined minimum	Ensure the internal/external wiper parts are not causing the wiper jam/seize. The wiper shaft should be able to be rotated by hand
Maximum Chamber Length	Calibrated length is greater than the pre-determined minimum	Check that the threads on the wiper carriage Lead Screw Nut have not worn allowing the shaft to rotate freely
Run Time Exceeded	Wiper has ran for longer than expected during calibration	Check that the threads on the wiper carriage Lead Screw Nut have not worn allowing the shaft to rotate freely

Maintenance Advice

The level and type of contamination within the fluid being treated and the frequency of wiping will define the frequency of maintenance action required, therefore the wiper system should be inspected frequently by a competent person to determine if the primary seal has broken-down.
If the seal is leaking, there will be seepage of the treated fluid from the wiper shaft hole or the 3mm-diameter pilot holes in the seal housing.
Consult the Maintenance section of this manual for details on how to carry out maintenance of the Automatic Wiping system.

Micrologix Spectra Control R6.0

Micrologix Spectra Control System

MicroLogix SPECTRA control panels are operated via the Panelview Plus 600 HMI located on the panel door. The Panelview is a LCD touch screen interface that allows the operator to control the UV reactor and change variables.

Home Screen

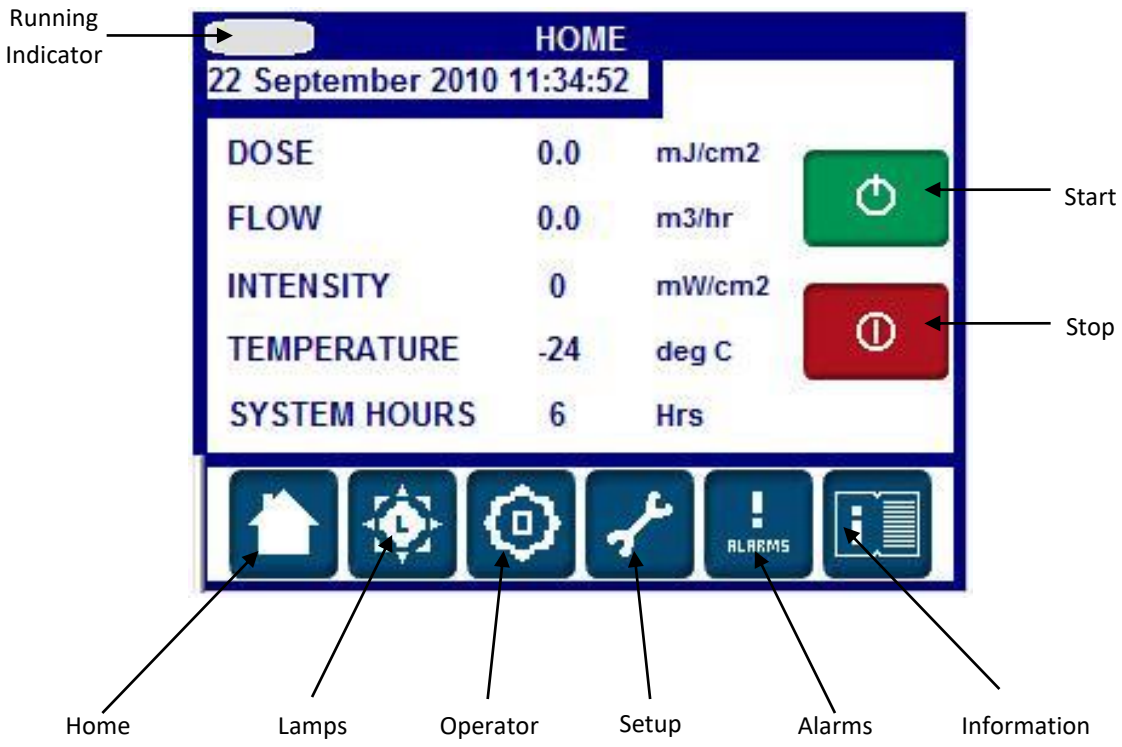

Figure 1

Feature	Description
	**Start Button -** (Must be held for 0.5 second to prevent accidental activation.) Pressing the Start button activates the start-up sequence and in turn strikes the lamps. During start-up, the Green Running LED flashes on and off (only visible in local mode). (See Start up Sequence for more details)
	**Stop Button –** (Must be held for 0.5 seconds.) Pressing the stop button will turn off the lamp(s). (Only visible in local mode).
	**Running Indicator -** Grey indicates the system is not running, flashing green indicates the system is in the start-up sequence and solid green indicates the system is running.
	**Home Button -** (Accessible from every screen) opens the home screen where the operator can view running details, start and stop the system when in local mode.

	**Lamp Button -** (Accessible from every screen) opens the lamp screen where the operator can view the status of the lamps, running hours and power levels.
	**Operator Button -** (Accessible from every screen) opens the operator screen where the operator can change key variables such as power mode, flow rate and remote operating.
	**Setup Button -** Opens the setup screen where trained personnel can login and change system variables including alarm and fault values.
	**Alarms Button -** (Accessible from every screen) opens the alarm screen where the operator can view any outstanding alarms.
	**Information Button -** (Accessible from every screen) Opens information screen which displays the software version and spare parts.

Inputs and Outputs

DIGITAL I/O		
INPUTS		
	I/0 -	**EMERGENCY STOP HEALTHY**
	Closed contact indicates emergency stop healthy	
	I/1 -	**ENCLOSURE TEMPERATURE HEALTHY**
	Closed contact indicated temperature of panel healthy	
	I/2 -	**QUARTZ WIPER HEALTHY**
	Signal from wiper board to indicate healthy wiper system	
	I/3 -	**QUARTZ WIPER RUNNING**
	Closed signal from wiper board indicates wiper running	
	I/4 -	**PROCESS INTERLOCK HEALTHY**
	Open the contact to activate the process interrupt action	
	I/5 -	**REMOTE START / STOP**
	Closed contact starts the system, open contact stops the system	
	I/6 -	**VALVE OPENED**
	Closed contact indicates the valve is open	
	I/7 -	**VALVE CLOSED**
	Closed contact indicates the valve is closed	
OUTPUTS		
	O/0 -	**EMERGENCY STOP RESET**
	Energizes emergency stop relay after a reset.	
	O/1 -	**FAIL SAFE RUN**
	Energizes fan relay	
	O/2 -	**CRITICAL ALARM HEALTHY**
	Opens when critical alarm is healthy	
	O/3 -	**NON - CRITICAL ALARM HEALTHY**
	Opens when non - critical alarm is healthy	
	O/4 -	**UV DOSE HEALTHY**
	Opens when UV dose is healthy	
	O/5 -	**Open Valve**
	Opens when valve feedback enabled and valve should be opened.	

ANALOGUE I/O		
INPUTS		
	AI/0 -	**CHAMBER TEMPERATURE (0 – 10V)**
	Chamber temperature from probe	
	AI/1 -	**UV INTENSITY (0 – 10V)**
	UV Intensity from probe	

Start-up Sequence

The following conditions must be achieved for the system to go into Running Mode:

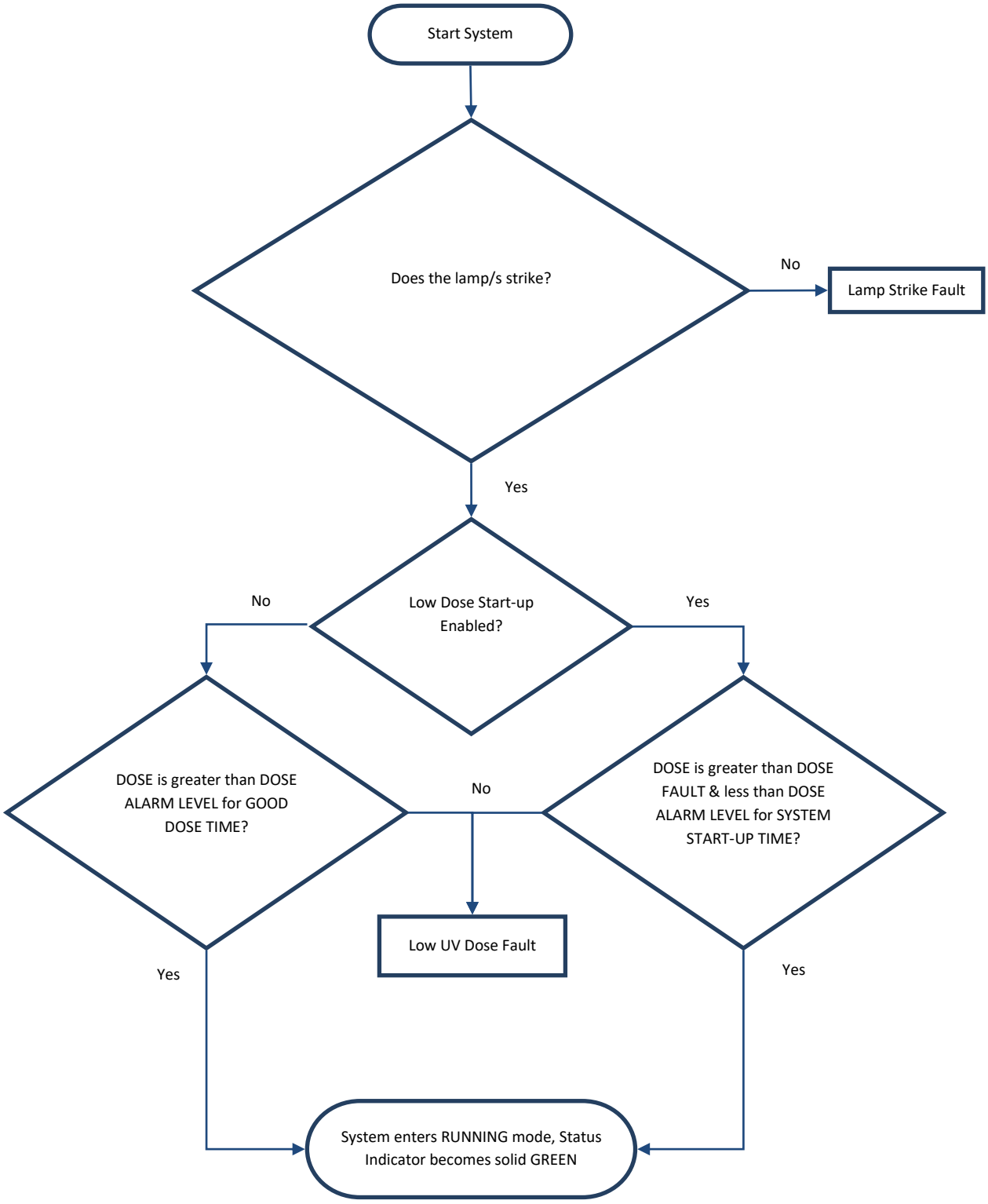

Lamp Screen

The lamp overview screen provides the operator with information related to the lamps. Lamps displayed in green are running, lamps displayed in grey are off and lamps displayed in red are in faulted condition.

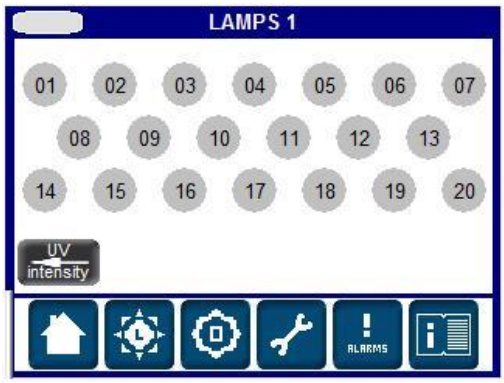

Figure 2

Pressing on a particular lamp displays the lamp detail screen as shown below in figure 3.

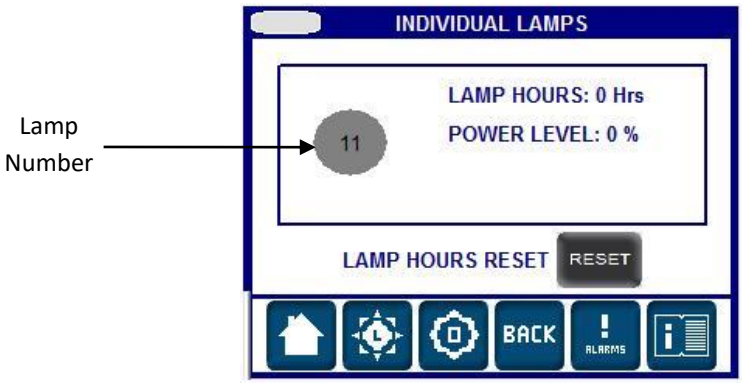

Figure 3

e lamp running hours will continually count and display a non-critical alarm when the recommended lamp life is reached. When a lamp is replaced the reset button should be pressed to reset the lamp running hours.

Note: When on the individual lamp screen the Setup button changes to a back button and when pressed returns to the lamp overview screen.
Pressing the UV Intensity button on the lamp screen opens the UV Intensity Probe screen as shown in figure 4.

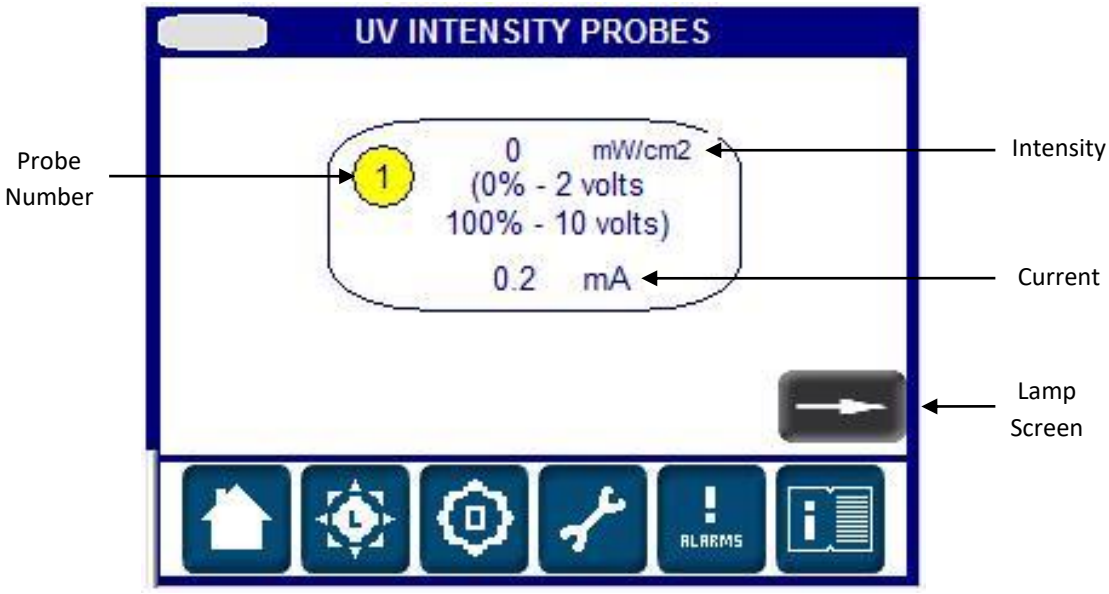

Figure 4

Operator Screen

The operator screen shown in figure 5 contains several of the more common variables.

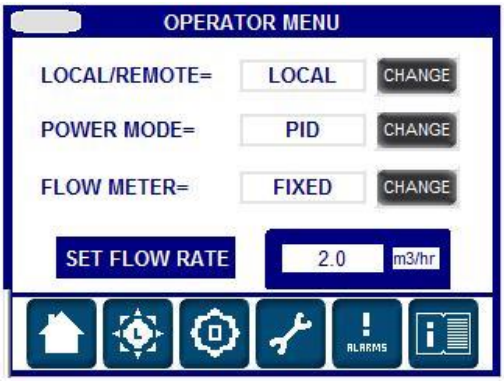

Figure 5

OPERATOR	>	LOCAL / REMOTE	
Description: Used to select how to start/stop the system either locally or remotely			
Selectable Values	*	Local	System can only Start/Stop by pressing Start on the Spectra
		Remote	System can Start/Stop remotely via a closed hardwired signal. Can also be stopped via the Spectra for emergency purposes.
		Comms	System can Start/Stop via external comms. Can also be stopped via the Spectra for emergency purposes.

OPERATOR	>	FLOW METER	
Description: Used to select what flow meter value is to be used when the system is in running mode. During start-up FLOW RATE will always be used			
Selectable Values	*	FIXED	Fixed Value
		FLOW METER	4-20 mA Flow Meter Input
		COMMS	Flow Signal via Comms

OPERATOR	>	CONTROL MODE	
Description: Used to select the control mode.			
Selectable Values	*	PID	In **PID** the system varies the lamp power between 30% and 100% to maintain a dose as close to the dose set point as possible.
		NONE	In **NONE** the system constantly runs the lamps at full power.

Micrologix Control System – Operator

The Set-up Screens allow the operator to alter the way the system will run by changing the system variables

WARNING – Altering variables can stop the system working correctly, only suitably qualified persons should alter any of the system Variables

- To enter the Set-up Screens as an operator, press enter on the Set-up Icon
- Enter the **Username: operator** & **Password: atg**

The setup screen provides access to setup and engineer variables depending on the login credentials used.



Logged Out | Logged In as Operator | Logged In as Engineer

Figure 6

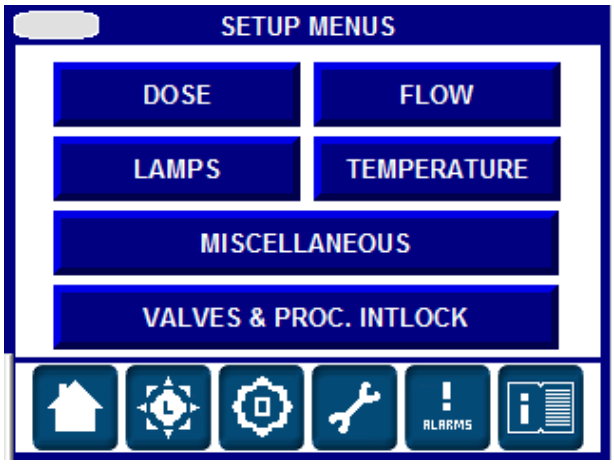

Figure 7

MENU	VARIABLE	MENU	VARIABLE
DOSE	Dose Units	TEMP	Temperature Fault Level
	Dose Set-Point		Temperature Alarm Level
	Dose Alarm		Alarm Temperature DB
	Dose Fault		Temperature Units
	Good Dose Time	MISC.	Software Version
	Low Dose Time		Quartz Part Number
	Low Dose Start-up		Lamp Part Number
	Low Dose End Time		Seal Part Number
	K-A	VALVES & PROCESS INTERLOCK	Valve Feedback
	UV Sensor Max		Valve Open Fail Time
FLOW	Fixed Flow Rate		Valve Close Fail Time
	Flow Units		Process Interlock
	Flow Meter Source		Interlock Action
LAMP	Number of Lamps		Process Interlock DB Time
	Allowed Lamp Faults		
	Strike Failure Time		

Dose Setup Screen

All the variables related to dose are available in the dose setup screen as shown below in figure 8.

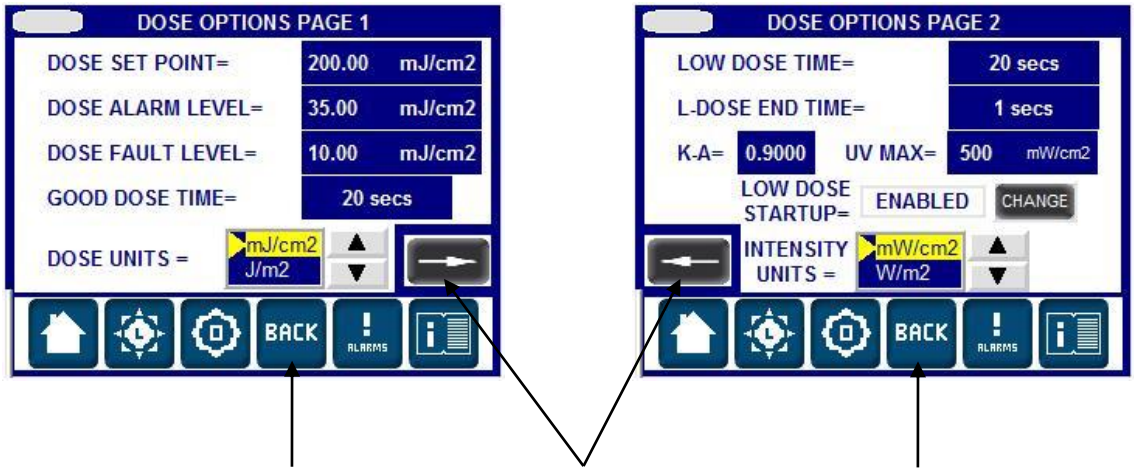

Figure 8

DOSE	>	DOSE UNITS	
Description: Working DOSE units can be selected.			
Selectable Values	*	mJ/cm^2	
		J/m^2	
		J/cm^2	

DOSE	>	DOSE SET-POINT	
Description: Used to set the target Dose. (Used for PID)			
Selectable Values	0 – 5,000		mJ/cm^2
	0 – 50,000		J/m^2
	0.00 – 5.00		J/cm^2

DOSE	>	DOSE ALARM LEVEL	
Description: When the actual dose drops below the alarm value for LOW DOSE TIME, the unit will display a non-critical alarm and will continue to run.			
Selectable Values	1 – 5,000		mJ/cm^2
	1 – 50,000		J/m^2
	0.01 – 5.00		J/cm^2

DOSE	>	DOSE FAULT LEVEL	
Description: When the actual dose drops below the fault value for LOW DOSE TIME, the unit will display a critical alarm and will shut down. DOSE FAULT LEVEL must be less than DOSE ALARM LEVEL			
Selectable Values	0 – 5,000		mJ/cm^2
	0 – 50,000		J/m^2
	0.00 – 5.00		J/cm^2

DOSE	>	GOOD DOSE TIME	
Description: The dose must be greater ALARM LEVEL for the GOOD DOSE TIME in order for the system to switch into Running mode. (This value is usually set to 15)			
Selectable Values	0 – 120		Seconds

DOSE	>	L-DOSE DOSE TIME	
Description: This variable sets the length of time the dose can drop below the Alarm or Fault values before activating the Alarm or Fault. (This value is usually set to 30)			
Selectable Values	0 – 60		Seconds

DOSE	>	LOW DOSE STARTUP	
Description: Used to define whether the system will go into running mode if the measured dose is greater than FAULT LEVEL but less than ALARM LEVEL. If enabled the unit will go into running mode once FAULT LEVEL has been exceeded for 5 mins, but the Low dose alarm activate if ALARM LEVEL is not reached. (This value is usually set to Disabled)			
Selectable Values	*	Disabled	
		Enabled	

DOSE	>	INTENSITY UNITS	
Description: Working INTENSITY units can be selected.			
Selectable Values	*	mW/cm²	
		W/cm²	

DOSE	>	UV SENSOR MAX	
Description: Used to convert UV sensor input to the actual UV intensity. The UV reading at 20 mA should be entered.			
Selectable Values	0 – 1,000		mW/cm^2
	0 – 10,000		W/m^2

Flow Setup Screen

Variables related to flow can be changed in the flow setup screen.

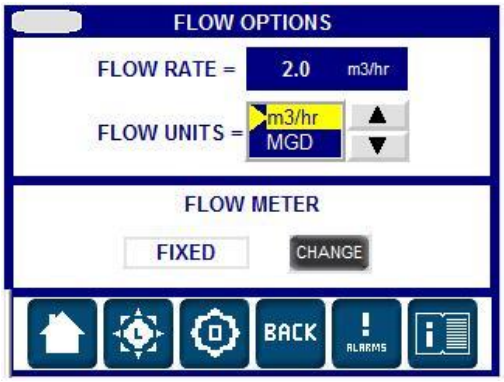

Figure 9

FLOW	>	FLOW RATE	
Description: This value will be used as the flow rate during the start-up period. If no flow meter is set up this value will be used as the constant flow rate.			
Selectable Values		0.1 - 2200	m^3/hr
		0.1 - 13.9	MGD
		0.1 - 9686	GPM
		0.1 - 52.8	Ml/d
		0.1 - 611	l/s

FLOW	>	FLOW UNITS	
Description: Used to select which flow units are required.			
Selectable Values	*	m^3/hr	Cubic metres per hour
		MGD	Million gallons (US) per day
		GPM	Gallons (US) per day
		Ml/d	Million litres per day
		l/s	Litres per second

FLOW	>	FLOW METER SOURCE	
Description: Is used to select what flow meter value is to be used when the system is in running mode. During start-up FLOW RATE will always be used.			
Selectable Values	*	FIXED	Fixed Value
		COMMS	Flow Signal via Comms

Lamps Setup Screen

Lamp variables can be changed in the lamp setup screen shown below in figure 10.



Figure 10

LAMP	>	NUMBER OF LAMPS
Description: Used to set the number of lamps in the chamber, if more than 20 lamps are selected a second page will become available on the lamps screen.		
Selectable Values	0 - 44	

LAMP	>	ALLOWED LAMP FAULTS
Description: Used to set the number of allowed lamp faults before a system fault is displayed. For example in a system with 20 lamps and an allowed fault level of 2 then 2 lamps could fail and the system would still continue to run along as the dose set point was achieved.		
Selectable Values	0 - 44	

LAMP	>	STRIKE FAILURE TIME
Description: Used to set the time that a lamp must strike before generating a fault.		
Selectable Values	0 - 44	

Temperature Setup Screen

The temperature screen shown in figure 11 provides temperature related variables.

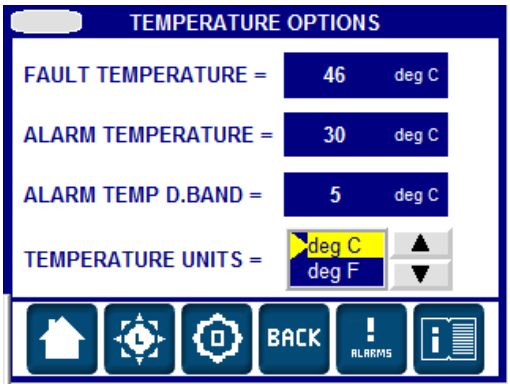

Figure 11

TEMPERATURE	>	FAULT TEMPERATUE	
Description: Temperature at which a critical alarm is generated, stopping power to the lamps. **(This value is usually set to 46°C)** **! If this value is set too high it could lead to damaged equipment or injury**			
Selectable Values	0 - 100		°C
	32 - 212		°F

TEMPERATURE	>	ALARM TEMPERATUE	
Description: Temperature at which a non-critical alarm is generated.			
Selectable Values	0 - 100		°C
	32 - 212		°F

TEMPERATURE	>	ALARM TEMPERATUE D.BAND	
Description: Temperature reduction below alarm level required alarm can be acknowledged.			
Selectable Values	0 - 100		°C
	32 - 212		°F

TEMPERATURE	>	TEMPERATUE UNITS	
Description: Temperature reduction below alarm level required alarm can be acknowledged.			
Selectable Values	°C		
	°F		

Miscellaneous Setup Screen

The miscellaneous setup screen allows software version and spare part numbers to be changed.

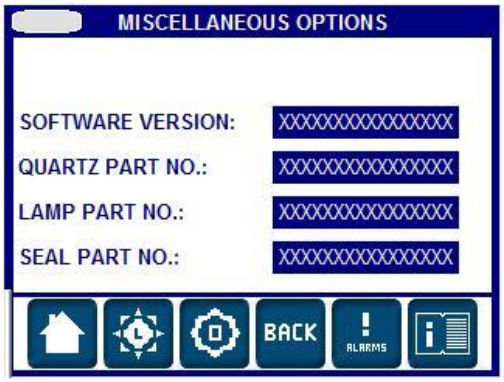

Figure 12

Valves and Process Interlock Setup Screen

The valves and process interlock screen provide variables



Figure 13

VALVES & PROCESS INTERLOCK	>	VALVE FEEDBACK
Description: Set whether valve operation is activated. If activated the MicroLogix SPECTRA must see the VALVE CLOSED signal before the system will start. Once the system goes into steady running mode the SPECTRA must lose the VALVE CLOSE signal within the VALVE CLOSE FAIL TIME and see the VALVE OPEN signal within VALVE OPEN FAIL TIME otherwise a Critical Fault is generated and the system will shut down		
Selectable Values	*	DISABLED
		ENABLED

VALVES & PROCESS INTERLOCK	>	VALVE CLOSE FAIL TIME
Description: Used to set the time allowed for system to receive the valve close signal before a critical alarm is generated.		
Selectable Values	0 - 99	Seconds

VALVES & PROCESS INTERLOCK	>	VALVE OPEN FAIL TIME
Description: Used to set the time allowed for system to receive the valve open signal before a critical alarm is generated.		
Selectable Values	0 - 99	Seconds

VALVES & PROCESS INTERLOCK	>	PROCESS INTERLOCK	
Description: Set whether process interlock function is activated. If activated the system will respond to the process interlock input.			
Selectable Values	*	Disabled	
		Enabled	

VALVES & PROCESS INTERLOCK	>	INTERLOCK ACTION	
Description: Set whether process interlock function is activated. If activated the system will respond to the process interlock input.			
Selectable Values	*	INTERRUPT	This will temporary stop the system until the signal is regained
		SHUT-DOWN	This will stop the system until the signal is regained and is manually restarted using the SPECTRA control interface.

VALVES & PROCESS INTERLOCK	>	VALVE OPEN FAIL TIME
Description: Used to set the time the process interlock signal must be lost for before the interlock action is initiated.		
Selectable Values	0 - 180	Seconds

Micrologix Control System – Engineer Setup

WARNING Altering the Calibration/Variables can be dangerous and cause irreversible damage, only suitably qualified persons should enter this menu.

The engineering screen is only available when logged in with the username 'engineer'. **Note:** This password is only available to suitably trained distributors/suppliers

The Engineering Screens allows an engineer to alter the SPECTRA calibration and system setup parameters.

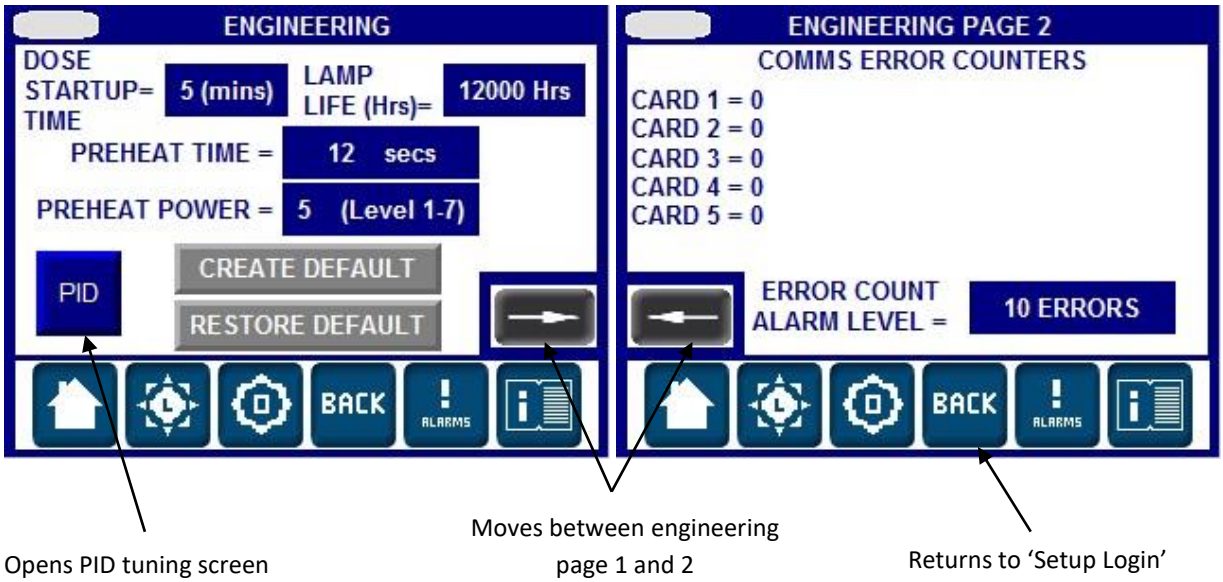

Figure 14

ENGINEER	>	DOSE STARTUP TIME
Description: Used to set the time the process interlock signal must be lost for before the interlock action is initiated.		
Selectable Values	0 - 60	Minutes

ENGINEER	>	PREHEAT TIME
Description: Used to set the preheat time on the electronic ballast cards.		
Selectable Values	12 (Advised not too change)	Seconds

ENGINEER	>	PREHEAT POWER
Description: Used to set the preheat power on the electronic ballast cards.		
Selectable Values	1– 7 (Default is set as 5 and is advised not to be changed)	

ENGINEER	>	LAMP LIFE	
Description: Used to set the recommended lamp life			
Selectable Values	0 – 20 000		Hours

ENGINEER	>	CREATE DEFAULTS
Description: Saves a copy of all entered variables.		

ENGINEER	>	RESTORE DEFAULTS
Description: Restores a saved copy of all variables.		

ENGINEER	>	ERROR COUNT ALARM
Description: Used to set the consecutive number of COMMS errors allowed per card before triggering COMMS fault.		
Selectable Values	0 – 60	

Alarms

The MicroLogix SPECTRA processes two types of alarms; critical and non-critical.

Critical are alarms designed to protect the system from unsafe operating conditions, when a critical alarm is generated the system is shut down and requires a manual reset before it can be started again.



Figure 15

Figure 15 shows the home screen with a critical alarm showing a red background, and the alarm acknowledgement screen. To clear an alarm press the alarm acknowledgement button (ALM ACK). If the alarm still exists the message won't reset.

Non Critical are alarms generated by events that do not compromise the safety or quality of the system. The system will continue to run with a non-critical alarm present.



Figure 16

The yellow background in figure 16 indicates a non-critical alarm is present.

Fault Screens

FAULT SCREENS		
Critical Alarms – Shuts the system down		
	Reactor Over Temperature -	
		Chamber Temperature has exceeded TEMPERATURE FAULT ALARM
	Chamber Temperature Input Out of Range -	
		Occurs when the input from temperature sensor drops below the loop minimum of 2V.
	PSU Temperature Fault -	
		Control panel or ballast cards have exceeded their maximum allowable values.
	Flow Signal from Comms is Low -	
		Flow meter is enabled over comms and the signal has been lost
	Valve Movement Fault -	
		The valve has failed to reach the open or closed limit as within the specified time.
	Lamp Strike Fault -	
		Generated when a lamp fails to strike or when comms to a card is lost
	Low UV Dose Fault -	
		Actual Dose is less than DOSE FAULT LEVEL.
	Emergency Stop Not Healthy -	
		The unit has been stopped using the emergency stop button on the front of the panel
	Process Interlock Signal Not Healthy	
		The Process Interlock input has de-energised whilst unit was running.
Non-Critical Alarm – Display the fault/alarm but will allow the system to continue running.		
	Reactor Temperature Warning	
		Chamber temperature has exceeded the TEMPERATURE ALARM LEVEL
	Lamp life Exceeded Alarm -	
		Lamp life exceeded
	Low UV Dose Alarm -	
		Actual Dose is less than DOSE ALARM LEVEL.
	Comms Failed to Ballast Card (x) -	
		Generated when a number of consecutive errors to a card exceeds allowed number of comms errors

PID Tuning Screen

The PID Tuning screen is only accessible when logged in as an 'engineer'. This page displays graphical representation of the set-point, output and process variable relating to the chamber. It also has the option to change the P, I, D variables for the system (used to define the response to under-dose or over-dose situations). During system running, the output to the lamps varies to match the process variable to the set point.

The option to change from automatic to manual power output is also available on this page.

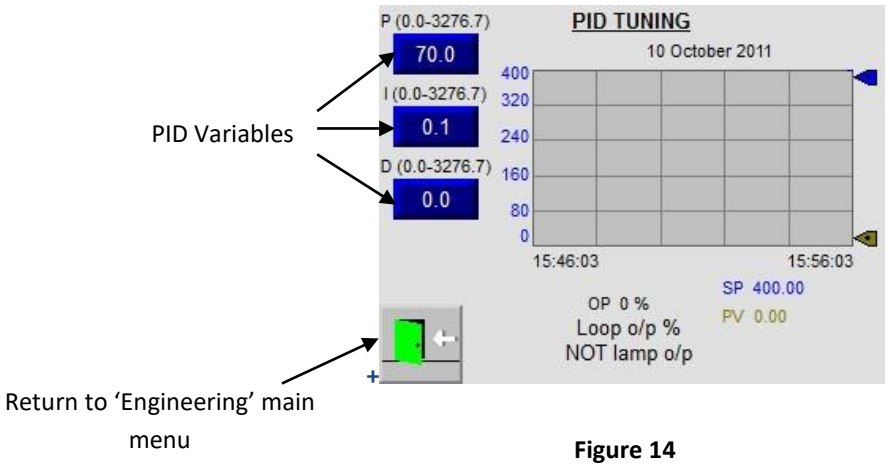

Figure 14

PID TUNING	>	P VALUE
Description: Used to set the P value. Used to define the response to under-dose or over-dose situations.		
Selectable Values	0.0 – 3276.7	

PID TUNING	>	I VALUE
Description: Used to set the I value. Used to define the response to under-dose or over-dose situations.		
Selectable Values	0.0 – 3276.7	

PID TUNING	>	D VALUE
Description: Used to set the D value. Used to define the response to under-dose or over-dose situations.		
Selectable Values	0.0 – 3276.7	

Information Screen

The information setup screen allows software version and spare part numbers to be changed; these are factory set and should not be altered.



Figure 15 Setup

Troubleshooting

Should a fault occur, please see below for troubleshooting guide.

System does not operate

Message	
No Message	
Possible Cause	**Possible Solutions**
Main Power Source is OFF	Ensure there is power to the system
Isolator is in the OFF Position	Ensure both the Isolator and all MCB's are turned ON.
Incorrect Supply Voltage	Ensure the correct voltage is being supplied to the system
Isolator Fuse has blown (If fitted)	Check Isolator fuse before replacing.

Variables displayed as

Message	
No Message	
Reasons	**Possible Solutions**
Home screen fails to show actual values and instead shows a series of #	RJ45 cable loose at either PLC, switch or Panelview

Lamp Strike Fault

Message	
Lamp # Failed to Strike	
Reasons	**Possible Solutions**
No power to ballast cards	Check Ballast Card Circuit Breaker hasn't tripped.
	Check number of lamps in setup is correct
	Check for visible damage to cables & connections
No power to lamps	Check for visible damage to UV lamp
	Check for if any large equipment is starting. If large pumps are started, the voltage across the UV lamp may dip long enough (milli-seconds) for the arc to decay.
	Check Supply voltage is correct

Low Dose

Message		
Low Dose Alarm Or Low Dose Fault		
Reason	Possible Causes	Possible Solutions
Dose Drops below Alarm Level/Fault Set-points	Fouling/deposits blocking UV light to the Sensor	Check the Quartz window for deposits on the inside or outside. Any coating can reduce the amount of UV light passing through to the UV Sensor. The amount of UV Light that will pass through the Quartz decreases as it ages and should be changed approximately every 18 months.
		Check for fingerprints on both the Quartz & UV Lamp. If the Quartz & UV Lamp are handled without gloves, the grease/fatty deposits from the skin can etch themselves onto the surfaces once the lamp is struck.
	UV Transmittance (UVT) of the water has decreased	Ensure water quality is within specification for the UV system installed
	Calibration of UV Probe (if AT-463 is fitted)	Upon commissioning/replacement of lamp, ensure the UV probe has been calibrated to 100% (20mA) when lamp is at full power
	Aging of the Lamp	Check the UV Lamp run time and replace lamp if necessary. UV Intensity decreases as the lamp ages.
	An increase in flow (if COMMS flow is selected)	Check the Flow Rate flowing through the system. If COMMS flow is selected, an increase in flow will decrease the Dose.
	Dose Alarm/Fault levels are set too high	Check that DOSE ALARM LEVEL and DOSE FAULT LEVEL are set to the correct values.
	UV Probe is not properly connected	Check there is a sensible value displayed on the screen. With the system stopped 4mA should be displayed.
	As the wiper (if fitted) sweeps across the quartz, the UV intensity may dip long enough for it too cause an alarm.	Check the LOW DOSE TIME value is correct. Force the wiper to carry out a sweep of the quartz to see if it affects the Dose long enough to generate a fault/alarm.
	Air trapped between the sensor and lamp/s	Ensure any air rapped in the chamber is remove as air trapped within the system will not allow UV Light to pass through correctly.

PSU Over-Temperature

Message		
PSU Over-Temperature		
Reason	**Possible Causes**	**Possible Solutions**
Temperature of power supply has exceeded thermostat cut-out temperature	No air circulation inside panel	Check Filter is not blocked
	Faulty Fan	Check Fan rotates when the contactor energises
	High ambient temperature	Ensure the ambient temperature is not higher than normal

Chamber Over-Temperature

Message		
Chamber Over-Temperature Check: Fluid Flow, Inlet Fluid Flow, Inlet Temperature & Over Temperature Probe.		
Reason	**Possible Causes**	**Possible Solutions**
Chamber temperature reading has exceeded temperature Alarm set-point **Or** **Chamber temperature reading has exceeded temperature Fault set-point**	Very slow or static flow through chamber	Check Fluid is flowing through the system at a reasonable flow.
		Check Manual/Auto Valves are Open
	Temperature Fault/Alarm levels set too low for application	Check the initial temperature of fluid flowing through the system
		Check the Fault/Alarm Set-Points are set to the correct/reasonable value
	Faulty Connection	Check for visible damage to the temperature probe & probe cable. Check the resistance across the red/blue and green wires to the temperature sensor (see below for resistance values).
		Check there is a sensible value displayed on the screen

Lamp Life Alarm

Message	
Lamp Life Alarm	
Reason	**Possible Solutions**
The lamp life timer has exceeded the recommended run hours	The system has a timer that counts how long the lamp has been running. Once this time is exceeded the UV Lamp should be changed & the Lamp Run hours reset.

Valve Fault

Message		
Valve Failed To Open Or Valve Failed To Close		
Reason	**Possible Causes**	**Possible Solutions**
Once the Valve Feedback has been enabled, the position on the Outlet valve is monitored. If the Outlet Valve has Open & Closed limit switches, these can be used to monitor its position. The amount of time taken for the valve to open & close can be adjusted.	Valve/s does not open or close	Check there is power to the valve
		If the valve is pneumatic or solenoid drives, check the air supply is available.
		Check the valve is in Automatic if being used in conjunction with the UV system
		Check that the inline fuse has not blown
		Check the valve is not jammed
	Valve takes a long time to open/close	Ensure the VALVE OPEN/CLOSE FAIL TIME is set higher than actual opening time of the valve

Process Interlock

Message	
Process Interrupt: Unit will re-start when interlock input re-gained Process Interrupt Fault: Process Interlock Input Lost/Not-Gained, Check Interlock.	
Reason	Possible Solutions
Only operational when the process interlocks has been enabled. The Process Interrupt can be set as either Interrupt or Shutdown. Interrupt will inhibit the UV System from running, until the re-strike timer has elapsed & the Process Interlock Signal re-established. Shutdown will stop the UV System, until the re-strike timer has elapsed & a Start signal is initiated. (Pushbutton, Comm's or Remote Start).	Check signal from the Process Interlock device. e.g. Pump is running – Flow Switch has operated etc.
	Check Process Interlock Delay time is set to an appropriate time.
	Check for visible damage to signal cables

Wiper Fault

Message	
Wiper Fault	
Reason	**Possible Solutions**
Loss of the Digital Signal from the Wiper board	Refer to Automatic Wiper Section of the Manual for Fault Diagnostics.

External Half-Full Power

Message	
No Message	
Reason	**Possible Solutions**
Permanent full power	Check PID is enabled under operator menu. If system is running with power mode set to none the lamps will constantly run at 100% power

Service and Maintenance

With regular maintenance, performed by highly trained engineers, flexible service options and exclusive access to OEM components, an atg UV service will vastly cut the risks associated with production down time, product recall and process failure, saving you both time, money and, most importantly, reputation.

Commissioning:

An atg UV commission ensures that your system is correctly installed, calibrated and working at optimum performance from day one. Additionally, commissioning by an authorised atg UV Technician is the first step in validating your industry exclusive five year warranty.

Interim-Service:

An atg UV Interim service provides assurance for industries where UV disinfection is paramount to production/normal operations. The Interim service allows for the identification/prevention of any potential problems before they develop.

Major-Service:

An annual major service is highly recommended in order to keep your system running at optimum performance, avoid unnecessary breaks in production and extend the life of the system. Major services also include replacement of consumables with OEM parts.

To arrange a service or commission, please contact your local authorised service provider, or our UK head office:

servicing@atguv.com

T: +44 (0)1942 216161 – Opt 2

Spare Parts:

The atg UV Team have designed and developed each system and spare part with the upmost care to ensure continued quality, safety and overall longevity of your atg UV Technology system. If non-genuine parts are used to maintain any system, this will invalidate the UV disinfection performance and warranty.

To order genuine spare parts, please contact your local authorised service provider, or the UK head office

E: spares@atguv.com

T: +44 (0)1942 216161 – Opt 1

For any other queries:

E: technical@atguv.com
T: +44 (0)1942 216161 – Opt 2

LISTENING TO & WORKING WITH **OUR CUSTOMERS** FOR OVER 30 YEARS

For further support, please contact your local authorised service provider. Alternatively, contact our uk head office:-

FOR GENUINE SPARE PARTS:

E: spares@atguv.com | T: +44 (0)1942 216161 – Opt 2

TO ARRANGE A SERVICE OR COMMISSION:

E: servicing@atguv.com | T: +44 (0)1942 216161 – Opt 2

FOR ANY OTHER ENQUIRIES:

E: info@atguv.com | T: +44 (0)1942 216161 - Opt 2

atg UV Technology
Genesis House
Richmond Hill
Wigan
WN5 8AA
United Kingdom

online: www.atguv.com

EXPERTS IN ULTRAVIOLET DISINFECTION

atg UV Technology