

EXPERTS IN ULTRAVIOLET DISINFECTION

www.atguv.com

atg UV Technology

UVMSC RANGE

INSTALLATION, OPERATION & MAINTENANCE MANUAL

Document History:

Issue	Creation Date	Created By
1	29/01/2019	James Ellis



atg UV Technology is committed to providing a global service network through local support.

For technical queries, to order spare parts or a service, please contact your local authorised service technician. Alternatively, please contact atg UV Technology's UK head office:

SPARES: E: spares@atguv.com | T: +44 (0)1942 216161 - Opt 1
SERVICE: E: servicing@atguv.com | T: +44 (0)1942 216161 - Opt 2

Manual Contents

UVMSC RANGE 1

Document History: 2

Manual Contents 3

Health & Safety 6

Health and Safety Information 6

Introduction 8

An Introduction to UV Disinfection Systems 8

What is Ultraviolet (UV) Light? 8

How does UV Disinfection Work? 8

Safety Advantages of atg UV Technology Disinfection 8

Terminology 9

Installation Guidelines 11

General Installation Guidelines 11

UV Chamber 11

UV Control Panel Installation Guidelines 16

UVMSC Installation, Commissioning and Calibration 17

Specific Installation Guidelines 17

Environmental Conditions 17

Cable Recommendations 18

Panel Supply Loads 20

Installation Checklists 21

Commissioning 23

Commissioning Procedure Checklist 23

UV Commission Work Sheet 25

Calibration ..... **Error! Bookmark not defined.**

Power Control Calibration (UVMSC-25-* only) ..... **Error! Bookmark not defined.**

UV Sensor Calibration 26

UVMSC Maintenance & Spares 28

Maintenance Schedule 28

Maintenance Log 28

Performance Monitoring 28

UV Lamp 28

Quartz Cleaning and Replacement 28

Seals 28

Control panel 28

Twist-lok System Maintenance 29

UV Sensor Maintenance 31

Wiper System Maintenance 32

Manual Wiper System Maintenance ..... **Error! Bookmark not defined.**

Spare Parts 37

General Assembly 37

Quartz & Lamp Assembly 38

UV Sensor Assembly 39
Automatic Wiper Drive Assembly 40
Manual Wiper Drive Assembly ..... **Error! Bookmark not defined.**
Single Lamp Automatic Wiper Carriage Assembly 41
Multi-Lamp Automatic Wiper Carriage Assembly 42
Maintenance Spares List 43

ATUV-1040 Automatic Quartz Wiping System 44
General Operation 44
LED Indicators & Push Buttons 44
Connection Diagrams 45
DIP-Switch Settings 46
Calibration 47
Run 47
Service Position 47
TroubleShooting 48
Maintenance Advice 49

Spectra II atg Membrane Operation V4 50
Spectra II Membrane Control System 50
Components 50
Start-up Sequence 63
Spectra II Operation 64
Main Screens 64
Fault Screens 66
Operator Menu Screens 68
Setup Menu Screens – Operator Menus 70
Navigating the Setup Screen 71
Setup Menu - Parameter Descriptions 72
Set-up Menu Screens – Engineering Menus 86
Navigating the Engineering Menu 87
Engineering Menu - Parameter Descriptions 88
Integration 94
Analogue Inputs 94
Analogue Outputs 94
Valves 94
Bleed On Relay 95
External Low Power Switching 95
Boost 95
Remote Start / Stop 96
Process Interlock 96
Miscellaneous Signals 96
MODBUS Communication 97
Introduction 97
Supported Interface 97
Physical Connection 98
Data Transmission 100
Message Structure 102

Data Storage 104
Full Register Map 108
Trouble Shooting 111
Service and Maintenance 120

Health & Safety

Health and Safety Information

Only suitably qualified personnel should operate/maintain the system - always follow safe working practices and do **NOT** take risks.
If in doubt always **ASK**, or for further information visit our website: www.atguv.com

	**All personnel involved in the installation, maintenance and operation of the UV system should read the relevant manual.**
	**Electrical Safety** **WARNING: Always ensure electrical plant or equipment is isolated before carrying out maintenance.**
	**Electrical Ground / Earth** **WARNING: All equipment must be Grounded / Earthed.**
	**Hot Temperature** **CAUTION: Chamber can be hot.** **Allow 15 minutes for lamps and other components to cool down before removal.**
	**Process Isolation - Fluid** **WARNING: Always fully isolate the system from the process before carrying out maintenance.** **DANGER: Failure to follow the correct procedures can cause serious injury or death due to forcible ejection of materials from the UV chamber.**
	**Process Isolation - Wiper** **CAUTION: Contact with moving parts can cause injury, for example trap fingers, clothing may become caught in moving parts of machinery, drawing in operatives.**
	**Ultraviolet Light** **WARNING: Do not expose skin or eyes to ultraviolet light.** **CAUTION: Do not touch lamps immediately after operation. Allow 15 minutes for lamps and other components to cool down.**

	**Quartz Components** **CAUTION: Handle quartz components with care to avoid breakages.**
	**Mercury - Lamp Breakage** **CAUTION: Lamps contain Mercury take care to avoid breakages. If a breakage occurs follow mercury spillage procedure below.**
	**Lamp Recycling** **Always recycle UV lamps properly and safely.**

Mercury Spillage	
Anticipate this event by collecting together a spill kit. Spill kits are commercially available; however most contain the following components:	1. Latex barrier gloves 2. Sealable plastic bag 3. Soft cloth, or cardboard rectangle 4. Syringe or pipette 5. Small brush, barrier foam or duct tape 6. Powdered Sulphur.
Mercury spillage procedure:	1. Put on Latex gloves 2. Collect quartz pieces, place in cloth in sealed bag. Mark bag as “sharp hazard” 3. Locate mercury ball. Use brush to aggregate smaller balls into large ball 4. Use syringe to draw up mercury bead. Transfer mercury onto paper towel, place inside sealed bag. Mark bag as “mercury hazard” 5. Use barrier foam or duct tape to collect remains of mercury - dispose of as detailed in point 4. 6. Consult site regulations regarding notification of a mercury spill. A UV lamp contains a maximum of 300 mg of mercury 7. Powdered Sulphur is optional - it can make collection of very small mercury balls easier.

Introduction

An Introduction to UV Disinfection Systems

Unlike chemical approaches to water disinfection, Ultra Violet (UV) light provides a rapid and effective method to disinfect water and other liquids.

What is Ultraviolet (UV) Light?

UV light is a form of light that is invisible to the human eye, and is classed as a non-ionising (or non-radioactive) radiation. It occupies the portion of the electromagnetic spectrum between X-rays and visible light.

How does UV Disinfection Work?

A unique characteristic of UV light is that a specific range of its wavelengths (those between 200 and 300 nm [billionths of a metre]) are categorized as germicidal – meaning that UV light damages the DNA and RNA of microorganisms and prevents them from causing infection. This capability has allowed widespread adoption of UV light as an environmentally friendly, chemical-free, and highly effective way to disinfect liquids.

Safety Advantages of atg UV Technology Disinfection

- UV is a chemical-free process that adds nothing to the water except UV light.
- UV requires no transportation, storage or handling of toxic or corrosive chemicals – a safety benefit for plant operators and the surrounding community.
- UV treatment creates no carcinogenic disinfection by-products that could adversely affect the quality of the treated water.
- UV is highly effective at inactivating a broad range of microorganisms including chlorine-resistant pathogens like Cryptosporidium and Giardia.
- UV can be used (alone or in conjunction with hydrogen peroxide) to break down toxic chemical contaminants while at the same time performing disinfection of the treated water.

atg UV Technology Disinfection Systems

The main features of the atg UV system are:

- UV Reactor: stainless steel reactor inside which water is exposed to UV light for disinfection.
- UV Lamps: emit high-intensity UV light; housed inside chamber and protected by quartz sleeve.
- Control Panel: contains electronics for system; controlled through user interface on outside.
- Wiper: motorised system used to clean lamp sleeves.
- UV Sensor: monitors UV intensity inside chamber and feeds readings back to control panel.
- Temperature Sensor: monitors temperature of reactor to protect people and equipment if the water flow is interrupted unexpectedly.
- Note: not all systems are fitted with Wiper, UV Sensor and Temperature Sensor.

Terminology

The following terminology is used throughout this Manual:

Term	Description
Control Panel	Contains control and power electronics for UV system
ATUV-1020	Common I/O module
ATUV-1031	Lamp module
AT-463	4-20mA UV sensor used to measure the UV intensity and so report on the performance of the system.
AT-900	4-20mA Validated UV Sensor
Bank	The term used to describe 2 lamps running in series powered by a single power supply
ELR	Earth leakage relay - used to measure earth leakage to operate an associated relay
Isolator	Disconnects system from power supply
MCB	Miniature circuit breaker
RCD	Residual current device
Electronic Ballast	Power supply used to control the starting voltage of the UV lamp and regulate the operating current
Wiper	Cleaning system for UV Lamp sleeves; may be manual or automatic

Term	Description
Spectra/Synergy	Electronic control systems used for monitoring and control of UV treatment
UV Sensor	Component for continuous measurement of the UV-C intensity inside the reactor
UV Reactor	Comprising a single chamber in which water is treated by UV irradiation, and the associated inlet and outlet valves, components and instruments
Restrike Timer	Timer used by the control system to allow the lamps to cool after stopping, during this time the lamps are inhibited from starting
Start-up Mode	Period between switch on of the UV system and running mode
Running Mode	When all lamps are struck and the dose reading has exceeded the minimum Dose level
Lamp Power	Electrical Power rating of UV Lamp
Dose	Calculation of the amount of UV treatment the water is receiving, based on UV intensity and flow rate
UV Intensity	A measurement of the strength of the Ultraviolet (UV) radiation given off from the UV lamps
UVC	A region in the electromagnetic spectrum. Wavelength range 200-280 nm
UVT	Ultraviolet transmissivity of the water undergoing treatment
Validated	Certified envelope of operation of UV Reactor, comprising for example flow, UVT
Pathogen	A bacterium, virus or other microorganism that can cause disease

Installation Guidelines

General Installation Guidelines

The guidelines in this section are designed to assist in the installation of an Ultraviolet Disinfection system into a typical plant. The recommendations below are **NOT** definitive. Depending on the installation, it may be necessary to install contrary to specific recommendations. If at any stage you are unsure as to any aspect of these instructions, consult with a specialist installation contractor. Please also make use of the Installation and Commissioning Checklists later in this manual section.

Please be aware:

- The manufacturer cannot accept responsibility for any installation carried out by other parties.
- When planning or executing any installation ensure all local Health & Safety Regulations are followed, local codes complied with and implement all appropriate risk assessments.
- Always allow a footprint around the chamber and control panel to allow safe work and access.

UV Chamber

Location of UV Chamber – Process Considerations

1. Unless there are other process considerations the UV unit should be located as close to the point of use as possible.
2. The UV system is normally installed after all other physical or conventional water treatment equipment (filters, softeners, de-mineralization etc.). The effectiveness of UV treatment is dependent upon water clarity and removal of the majority of suspended solids will reduce fouling of quartz sleeves and thimbles. However, for certain process requirements and considerations, the UV unit may need to be installed 'up front' and before some or all of the treatment equipment.
3. If chemical dosing is utilized to provide a residual, this should be installed downstream of the UV chamber. This will reduce chemical reduction by the UV system and will prolong the chamber life.

Location of UV Chamber – Mechanical Considerations

1. Allow sufficient room for removal and replacement of lamps, quartz sleeves / thimbles and wiper components (where fitted).
2. Ensure the UV Chamber location does not prevent safe maintenance of existing equipment.
3. Ensure that all equipment and pipe work will be adequately supported when installed. The UV chamber should not be used to support the pipe work, or else this may damage the UV chamber.
4. Avoid locating chambers and panels under dripping pipe work or chemical equipment and avoid storing chemicals that can lead to corrosion of system components, close to the UV equipment.
5. To minimize flow interruption and where process considerations allow it, a by-pass should be installed around the UV chamber.
6. Plan a drainage route for the equipment to the plant room main drain. It is good practice to install lockable ball valves on the drain and vent to aid maintenance.
7. The preferred material for the connecting pipework is stainless steel (either 304 or 316L grade), although straight pipe sections of uPVC may be connected direct onto the UV chamber, provided they are a minimum Class 'E' (BS 3505). These materials should be used for a minimum straight section of 1000 mm, if the pipe is 6" or greater in diameter. If the pipe is less than 6" in diameter a minimum straight section of 500 mm should be used. ABS should not be used. If plastic pipe is used, the same size connection should be used for the connecting pipework. **Reducing pipework connection size directly onto the UV chamber is not recommended!**
8. If the pipe is 6" or greater in diameter, any elbows within 1000 mm of the UV chamber must be stainless steel. If the pipe is less than 6" in diameter, any elbows within 500 mm of the UV chamber must be stainless steel
9. If the pipe is 6" or greater in diameter, any valves within 1000 mm of the UV chamber must be have a stainless steel disc (or other metal) and are not coated with a polymer material if the pipe is less than 6" in diameter, any valves within 5000 mm of the UV chamber must have a stainless steel disc (or other metal) and are not coated with a polymer material.
10. Do not install in direct sunlight and protect from extremes of environment (Weather, High Humidity, High or Low Temperatures).
11. Where cable lengths exceed the distance between the control panel and UV chamber, ensure these are not coiled as this could create un-wanted noise on the signal cables, and in the case of lamp cables, a voltage drop may result. Please contact atg UV for further information.

Location of UV Chamber – Airlocks/ Water Hammer

1. Install the pipe work in such a way that the UV Chamber always remains flooded. If the chamber drains down, the mechanical shock when full flow is regained may damage the quartz components
2. If it is not possible to ensure the chamber remains flooded due to its location, air release and check valves can prevent emptying and draining of the system. Discuss this with your installer
3. The chamber should not be allowed to drain when not in use as this can damage internal components
4. Avoid excessive water hammer as this can damage quartz components. Avoid locating the chamber close to the outlet side of a pump. If this is unavoidable, installing a 'soft start' on the pump can reduce the chance of quartz breakages
5. On installations where the chamber and / or pipe work cannot remain flooded, a bypass should be installed where it can be easily operated. This should be opened when flow is restarted otherwise lamp and quartz breakage may occur. (Flow restarting can mean the pump starting, a backwash cycle or movement of another valve).

Location of UV Chamber – Special Considerations for Drinking Water Treatment Plants

1. As per the UVDGM guidelines, it is a requirement for all Validated systems to install a straight piece of pipe with a minimum of 5 pipe diameters upstream of the chamber to ensure good flow characteristics through the chamber, as shown in the example installation diagrams on the following page.

Chamber Orientation

1. Ensure the temperature probe (if fitted) is located on the top of the UV system.
2. Ensure the air vent (if fitted) is located on top of the UV system.
3. Install the system so that both the temperature probe and the UV monitor can be installed and maintained.
4. Ensure the lamps and sleeves can be removed, and service access is considered for the UV system and adjacent equipment.
5. UV lamps should be installed horizontally for both vertical pipe and horizontal pipe configurations, unless otherwise specified.

Cross Flow Chamber Installation Example

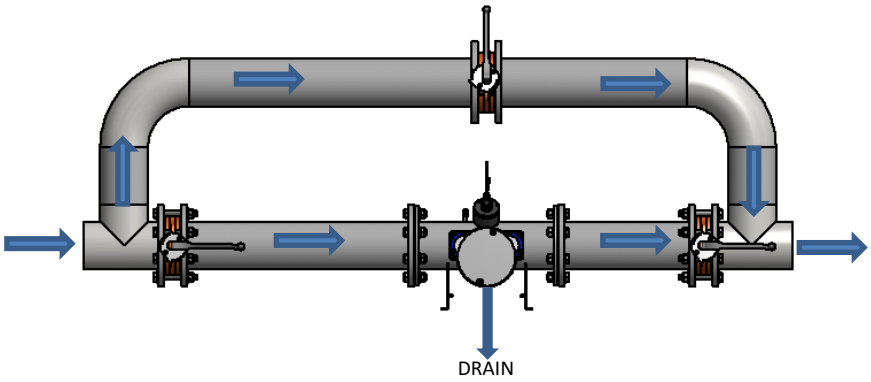

Note: Chamber can be positioned vertically ensuring the lamps remain horizontal

Axial Flow Chamber Installation Example

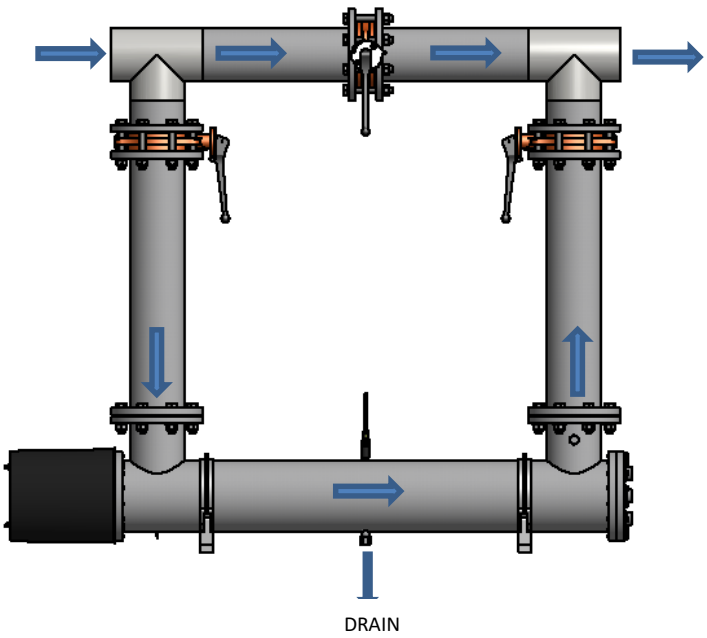

Temporary Basket Strainer Installation (Optional)

1. These should be located after the UV unit. Where the temporary basket strainer is of a larger micron rating than the upstream filtration then regular access to the strainer should not be required. However the strainer should be accessible if necessary.
2. We recommend installing this device after the UV system in a spool piece, which can be removed for maintenance in the orientation shown in the diagram below. If the UV chamber is mounted in a vertical section of pipe work, it is recommended that a point of access be provided to the pipe section below the chamber, in order to remove any quartz shards which have dropped through it.

Diagram of Strainer Installation

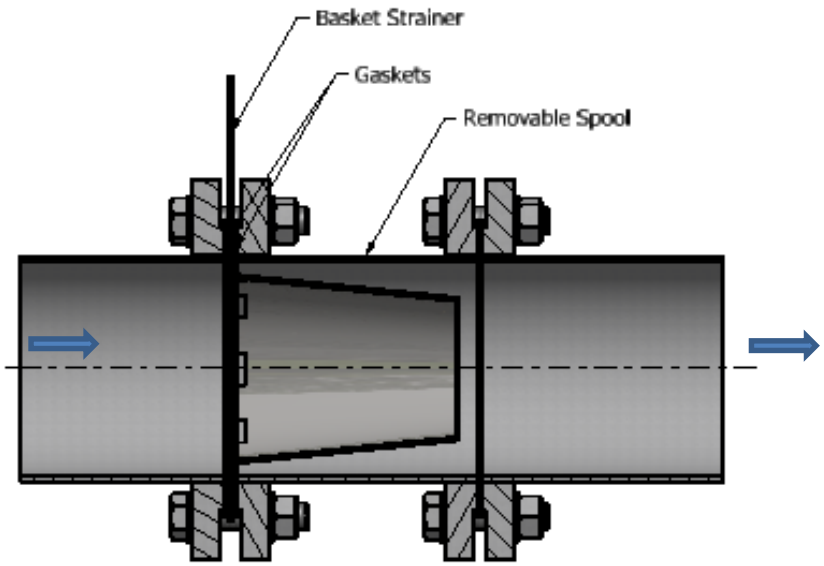

UV Control Panel Installation Guidelines

1. Complete the Installation and Commissioning Checklists later in this manual section to ensure proper installation and safe work.
2. Locate the panel as close as possible to the chamber
3. Ensure the correct supply is available on site and the correct supply cable is used. If the correct voltage is not available, a Step Up / Step Down transformer may be needed - please contact your supplier for details.
4. Ensure the correct circuit breaker size and type is available for the unit (see the Cable Recommendations subsection of this manual). If the suggested breaker is installed then sufficient discrimination should be ensured.
5. Ensure that the UV chamber and the control panel are correctly earthed / grounded – an Earth / Ground point and cable is fitted & supplied to all UV chambers.
6. The panel must be firmly mounted against a vibration free wall or suitable supporting frame.
7. Ensure panel fans (if fitted) are not obstructed. It is recommended to change or clean the filter media once construction on a project has finished.
8. Do not install in direct sunlight and protect from extremes of environment (Weather, High Humidity, High or Low Temperatures).
9. Install control panel display at eye level.
10. Do not locate the control panel in areas where it may be subjected to chemical or water leaks.
11. If the panel is floor mounted ensure that the panel is not located in a potential flood area.
12. Ensure the correct control panel is matched with the appropriate chamber. The chamber can be identified by an engraved serial number located on a fixed flange of the chamber. The panel can be identified by the label on the inside the door. These two codes should match exactly (e.g. C11111-A).
13. If a junction box is to be used to extend lamp cables, these must be 1000V rated.
14. For lamp cables that require earthing, ensure the cable braiding has been screened and connected into each lamp/bank earth terminal (if provided). See image below.

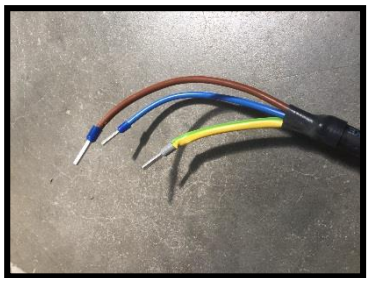

Screened Lamp Cable

UVMSC Installation, Commissioning and Calibration

Specific Installation Guidelines

Environmental Conditions

Unless otherwise agreed the following environmental conditions should be met:

Condition	Range
Ambient Temperature	0 – 45 °C (32 – 113 °F)
Relative Humidity	< 90%

Cable Recommendations

Below are recommendations for a cable:

- Length **not exceeding 20 metres**.
- Un-bunched installed in trunking/cable tray
- Installed in an ambient temperature of 0…45ºC

If there are any other specifications that are in place that does not meet this criteria, please contact atg UV for further information.

Model	No. of Lamps	Lamp Power	Cable to Panel from Distribution	Breaker in Distribution Panel
UVMSC-73-4	1	7.3kW	6.0mm2c.s.a., 600/1000V, **Neutral required**: 4 Core Cable (2ph,N,E) **Neutral not required**: 4-Core cable (3ph,E)	40Amp Type “D” Miniature Circuit Breaker
UVMSC-273-8 UVMSC-373-8	2 3	7.3kW 7.3kW	6.0mm2c.s.a.,600/1000V, **Neutral required**: 4 Core Cable (3ph,N, Armour as Earth) **Neutral not required**: 4-Core cable (3ph,E)	63Amp Type “D” Miniature Circuit Breaker
UVMSC-473-10	4	7.3kW	10.0mm2c.s.a.,600/1000V, **Neutral required**: 4 Core Cable (3ph,N, Armour as Earth) **Neutral not required**: 4-Core cable (3ph,E)	80Amp Type “D” Miniature Circuit Breaker

Model	No. of Lamps	Lamp Power	Cable to Panel from Distribution	Breaker in Distribution Panel
UVMSC-673-12	6	7.3kW	16.0mm2c.s.a.,600/1000V, **Neutral required**: 4 Core Cable (3ph,N, Armour as Earth) **Neutral not required**: 4-Core cable (3ph,E)	100Amp Type “D” Miniature Circuit Breaker

Note: If additional Lamp cable is required for Lamp Powers of 3.5KW & above, only approved cable is to be used due to the high frequency output from the electronic ballasts. Please contact atg UV for further details.

WARNING! Always ensure cables are installed with adequate mechanical protection!

Disclaimer: These cable recommendations are sized based on the maximum load of the system, therefore fault protection/discrimination should be assessed depending on the site installation and local regulations. **atg UV Technology** is not responsible for any unsafe work practices, procedures, actions or inactions taken by the client during the installation.

Panel Supply Loads

Model	No. of Lamp Drivers	Lamp			Supply Loads	
		Power (W)	Nominal Voltage (V)	Nominal Current (A)	380 – 400V	440 – 480V
UVMSC-73-4	1	7300	750	9.7	25A	22A
UVMSC-273-8	2	7300	750	9.7	43A	38A
UVMSC-373-8	3	7300	750	9.7	40A	35A
UVMSC-473-10	4	7300	750	9.7	61A	53A
UVMSC-673-12	6	7300	750	9.7	77A	67A

Installation Checklists

General Installation Checklist

Inspect the goods to ensure no damage has occurred in transit. Check that that all ordered items are present.	
Match the chamber and panel - if multiple systems are delivered to the same site please ensure that the serial numbers match.	
Install the control panel as described in the Control Panel Installation Guidelines	
Run the cables in accordance with local regulations. (Do not pull cables tight around sharp corners as this may affect the performance and reliability of the system, segregate cables, do not cable tie together.)	
Cabling required from Control Panel to Chamber: • Lamp Cable • Earth Cable 1 core • Temperature Probe Cable - 1 per probe, supplied as standard • UV Probe Cable - 1 per probe, supplied as standard • Wiper Cables – supplied as standard (if a wiping mechanism is fitted) ➢ Opto Cable ➢ Wiper Motor Cable Cable sizing should be in accordance with Cable Recommendations section	

Chamber Installation Checklist

Connect Earth/Ground cable from the boss on the chamber to the control panel ground/earth point.	
Install the temperature probe by screwing the AT487- temperature probe into the boss on the top of the chamber. Connect the temperature probe cable.	
Install UV Probe Insert the UV probe/s supplied into the UV housing located on the chamber Connect the UV Probe cable.	
Check the quartz sleeve/seal Prior to flooding, remove the lamp connectors & UV Probe Housing and check the quartz is not damaged	
Install the lamp and make the electrical connections Check that the correct lamp is used, visually checking the lamp for any damages. If more than 1 lamp is fitted ensure the lamps are fitted in order (i.e. lamp1 then lamp2 etc.)	

Control Panel Installation Checklist

Before the power supply to the panel is switched on:	
Connect the Earth/Ground cable from the chamber to the terminal provided in the panel.	
Connect the Temperature probe and UV probe as per the schematic; this is usually on a terminal strip at the bottom of the panel. Adjacent numbers relate to the connections of the probe wires If more than 1 probe is fitted ensure that probe 1 “monitors” the first lamp(s)/bank	
Connect the lamp cables as per the schematic; this is usually on a terminal strip at the bottom of the panel. Adjacent numbers relate to the connections of the lamp cable core. See electrical schematic for more information	
Connect the wiper cables (if a wiping mechanism is fitted) The wire numbers from the wiper mechanism relate to the numbers on the terminal strip. See electrical schematic for more information Consult Wiping System section for more details on wiper. Note: The wiper is factory calibrated. Please ensure the cables are connected before turning the board on or the wiper will lose its calibration and will require recalibration.	
Connect the Customer I/O – Connect the digital/analogue I/O as required. Please refer to the Operation section of the manual	

Commissioning

Use the Commissioning Procedure Checklist to safely put the unit into operation. The following steps should also be taken:

1. The pipe work and UV systems should be filled with water and excess air vented. Check for leaks
2. For commissioning the flow rate of liquid to cool the lamps should be at least 1 m^3/hr (4 gpm) per kW to cool the lamps
3. After lamps have been switched off wait 15 minutes to allow them to cool before attempting to restart - frequent start / stop cycles will shorten lamp life.

	**WARNING!**
	Only switch the unit on when the dust cover is fitted.

Commissioning Procedure Checklist

Ensure the unit has been installed as per local regulations and according to the Installation Guidelines	
Check that the incoming mains connections are correct: Single Phase Neutral and Earth, 2 Phase Neutral and Earth, 3 Phase Neutral and Earth, Please check the electrical schematics to verify what power supply is required	
Ensure quartz and lamps are installed and waterproof	
Ensure Temperature and UV Intensity probes are installed and connected to their corresponding terminals in the control panel	
Ensure Lamp cables are installed and connected to their corresponding terminals in the control panel	
Ensure the earth/ground cable is connected from the chamber to the terminal provided in the panel.	
Ensure full flow through the reactor is available and any air trapped at the top of the reactor is released	
Turn on the power at the distribution source	
Check that the voltage on the incoming side of the Isolator is correct and record this in the UV Commission Work Sheet that follows this section Ensure the choke tapping's (UVMSC-25-* only) correspond to the incoming supply voltages measured.	
Switch off the lamp MCB's and with the UV Control Panel door open turn on the Isolator **Warning: Be extremely careful as the panel is now LIVE. Only a qualified person should operate the system with the panel door open.**	

Test the Earth Leakage Relay (ELR) (UVMSC-25-* only) - on the earth leakage relay, press the test button. On the control panel display an Earth Leakage Fault should be displayed and the red fault LED should light. When the reset button on the earth leakage relay is pressed the relay should reset, then the fault can be cleared (see Operation section for details on how to Reset faults).	
Test temperature sensor by disconnecting the probe on the chamber; a fault should be displayed. Reconnect the probe and clear the fault (see Operation section for more details)	
Time & Date - verify that the time and date are set correctly and adjust if necessary (see Operation section for more details)	
Check that the system variables are set as required – consult the System Databook for more details	
Check lamp fault – without turning on the lamp MCBs, start the system; a lamp fault should be displayed. Clear the fault (see Operation section for more details).	
Turn on the Lamp MCBs	
Start the system	
Check the fan is running correctly	
Once the system enters run mode **record the Lamp currents** - allow the system to settle for a minimum of 5 minutes before recording these values If the lamp currents are not within +/- 10% nominal lamp current, re-calibration of the thyristors (UVMSC-25-* only) may be required - consult the Power Control Calibration section for more details	
Calibrate the UV probe – consult the UV Sensor Calibration section for more details	
Stop the system	
Activate the Automatic Wiper (if wiping mechanism is fitted) - the system should perform a sweep of the quartz as soon as the Wiper control board is activated Calibrate the wiper (If necessary) – consult the **Automatic Quartz Wiping System** section for more details	

UV Commission Work Sheet

All readings to be obtained with Fixed Flow Rate and lamp in Full Power

Supply Voltages	
P1 – P2	
P1 – P3	
P2 – P3	
P - N	

Lamp Current / Volts (Voltages taken on lamps below 3.3KW only)											
L1			L2			L3			L4		
L5			L6			L7			L8		
L9			L10			L11			L12		
L13			L14			L15			L16		
L17			L18								

Spectra Readings		Calibration				Spectra Settings	
Dose (mJ/cm²)		Probe 1 UV %		m/A		Final UVT %	
Temp ˚C		Probe 2 UV %		m/A		Flow meter Enabled (Y or N)	
Flow (m³/hr)		Probe 3 UV %		m/A		Auto Restart Enabled (Y or N)	
Nominal lamp current		Probe 4 UV %		m/A		Re Strike Time (mins)	
Average lamp current		Probe 5 UV %		m/A		Spectra II SD Card back up	
Average UV%		Probe 6 UV %		m/A			
		Probe 7 UV %		m/A			
		Probe 8 UV %		m/A			
		Probe 9 UV %		m/A			

Checks (pass √ or fail X)		(√ or X)		(√ or X)		(Y or N)	
Earth Leakage Trip		Lamp Fault		Chamber		Installed Correctly	
Temperature Trip		MCB's Test		Auto wiper		Wiper Calibrated	
Chamber Earth Cable		Quartz Leaks		Low Dose Alarm		Lamp Cable Flash Test	

Condition of UV system on leaving site					
Clean		Local/Remote		By-Pass fitted (Y or N)	
Alarms		Full/Variable/Half Power Enabled		Running (Y or N)	

UV Sensor Calibration

Warning: Do not expose skin or eyes to ultraviolet light.

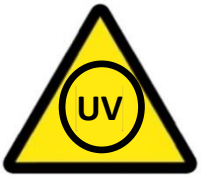

AT-900 Validated 4-20mA UV Sensor

The validated UV sensors are factory calibrated in reference to a known device.
They are most often used on validated UV systems but can also be used on non-validated UV systems. These sensors are 4-20mA devices and are fitted to the UV sensor housing using a black plastic adaptor.

These sensors must be returned to the factory for calibration every 12 months.
Please contact your supplier for details.

AT-463 4-20mA UV Sensor

The AT-463 is a 4-20mA UV sensor used to measure the UV intensity and so report on the performance of the system.

AT-463 Circuit Board

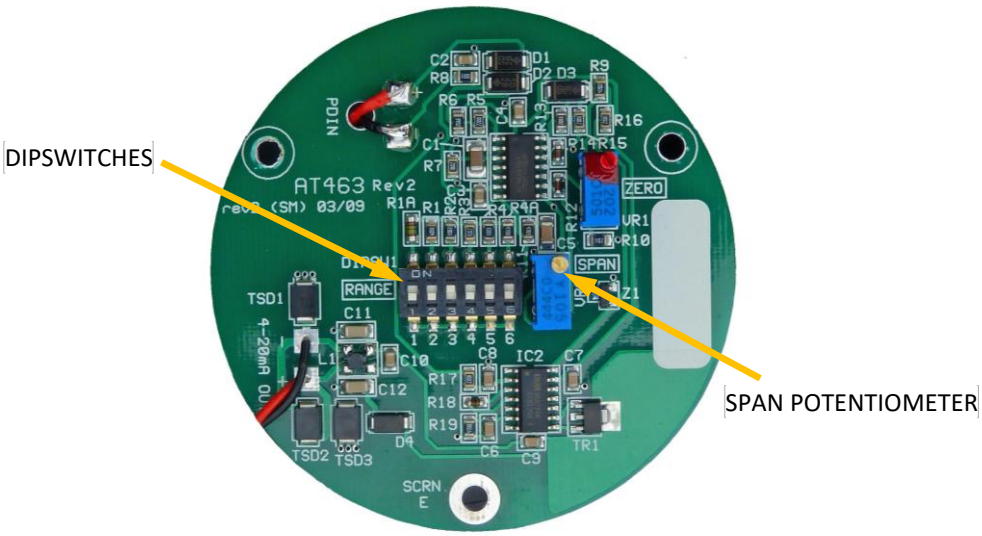

The UV intensity sensor should be calibrated to 100% on system commissioning with the chamber full of the process fluid. At every lamp change the sensor should again be calibrated to 100% to allow for the natural aging of the sensor.
Note: If the system has highly variable water quality or the UV system is installed on a critical process, calibration should be performed in conjunction with a water sample to be assured of the correct level of treatment. Please contact your supplier for more details.

AT-463 Calibration Procedure

1. With the UV sensor installed on the UV reactor, remove the 3 screws and open the lid.

   Inside, two potentiometers and a six-pole dipswitch are visible; the **Zero** Potentiometer is factory set, sealed and should NOT be adjusted.

2. Ensure the system's power is set to ***Full***. This can be performed via the Operator Menu Screen – Control Mode. Please refer to Control section for details.

3. Start the system and allow the lamp to stabilize for approximately ten minutes.

   On Synergy 2 & 3 control panels, monitor the UV% LED display

   On the SPECTRA II control panel:

   For Membranes: In the MAIN INFORMATION screens, select Average Intensity, then press the ENTER button to display % UV Intensity.

   For Touch Screens: Select the UV Intensity Icon, then select the desired UV Probe icon that is to be calibrated to display the % UV Intensity

4. Adjust the **Span** Potentiometer until the Intensity reading is as close to 100% as possible. Turning the screw clockwise will increase the reading; turning the screw anti-clockwise will decrease the reading.

   If it is not possible to achieve 100%, change to the next higher sensitivity dipswitch.

   If the reading is constantly over 100%, change to the next lower sensitivity dipswitch.

   The dipswitches set the amplification range with position 1 being the highest sensitivity gain and position 6 being the lowest sensitivity.

   Note: (It is likely that the system will have been shipped with the correct dipswitch already selected)

5. Stop the System. The intensity reading should read 0%. Wait a few minutes for the lamp to cool and restart the unit. After restart, the intensity display should settle back to 100% (+/- 5%).

   The UV Intensity monitor is now set up correctly. No further adjustments need to be made.

6. Ensure the system's power is set to ***Variable***. This can be performed via the Operator Menu Screen – Control Mode. Please refer to Control section for details.

7. Close the UV Intensity monitor's lid and replace screws.

UVMSC Maintenance & Spares

Maintenance Schedule

Maintenance Log

Whenever maintenance work is carried out on the UV system, particularly with reference to lamp changes and cleaning / replacing the quartz, a record should be kept of the work carried out and the lamp run hours noted. This log should be used to monitor general lamp life and to develop accurate frequencies for cleaning and replacing the quartz components.
A maintenance log sheet can be found in the systems Data-book.

Performance Monitoring

Taking samples from the sample points on the inlet and outlet legs of the UV chamber can be used to monitor the performance of the system. Care should be taken when sampling not to contaminate the sample itself. Poor performance test results can often be traced back to poor sampling techniques.
Note: ensure system is electrically isolated and chamber is fully drained before any maintenance work is carried out.

UV Lamp

Lamp life expectancy is based on continuous use before the output drops to the low UV output threshold level, making replacement necessary. Frequent stop / start operation will reduce lamp life. Please refer to the system Data-book for typical life expectancy of Lamps.

Quartz Cleaning and Replacement

The quartz thimble should be removed and cleaned at a regular intervals. Please refer to the system Data-book for typical life expectancy of Quartz. The wiper (if fitted) cleaning frequency should be increased if there are excessive deposits on the quartz thimble or decreased if the thimble remains very clean.
A change in water quality may necessitate a change in the wiper (if fitted) cleaning frequencies. The quartz thimble should be removed and cleaned in a soap and water solution. Heavier or stubborn deposits can be removed by soaking in a 5% solution of citric acid or wiping with household vinegar. To remove fingerprints from the quartz thimble, use surgical spirit and a lint free cloth. Please refer to the system Data-book for typical life expectancy of Quartz.

Seals

It is good practice to replace the seals whenever the quartz thimble is removed from the chamber.

Control panel

Commissioning often takes place in a dusty environment. The inlet filter mat should be cleaned shortly after commissioning and at regular intervals depending on the cleanliness of the air. The control panel RCD (ground fault relay) should also be tested at regular intervals by an electrically competent person by pressing its Test button.
Note that this will shut the unit down and display a Ground Fault.

Twist-lok System Maintenance

UV Lamp Maintenance

Please refer to the Health & Safety Section at beginning of the manual for Symbol explanations. These are to be adhered to when carrying out the following maintenance procedures.



UV Lamp Extraction	
1	Unscrew the clamp ring retaining nut locking the Moulded Twistlok Lamp Connector in place and remove
2	Carefully disconnect the lamp connector from the lamp and remove
3	Twist the lamp until unlocked and carefully extract from the quartz keeping the lamp parallel to the quartz thimble at all times to avoid damage

UV Lamp Installation	
Before inserting a new lamp, ensure all components are clean and dry. Check that all components are mechanically sound and assembled correctly. **Note:** Please ensure that no dirt, debris or fingerprints get onto the lamp surface as this will reduce the lamp life	
1	Carefully insert the lamp into the quartz thimble, keeping it parallel with the quartz thimble to avoid damage
2	Twist lamp to lock in place, taking care to ensure the return rods are not pointing towards the UV sensor
3	Carefully connect the lamp connector ensuring that the locking pin is located correctly
4	Fasten the clamp ring retaining nut to lock the lamp connector in place
5	Ensure the Lamp hours have been reset via the control panel (see Operation section for more details)

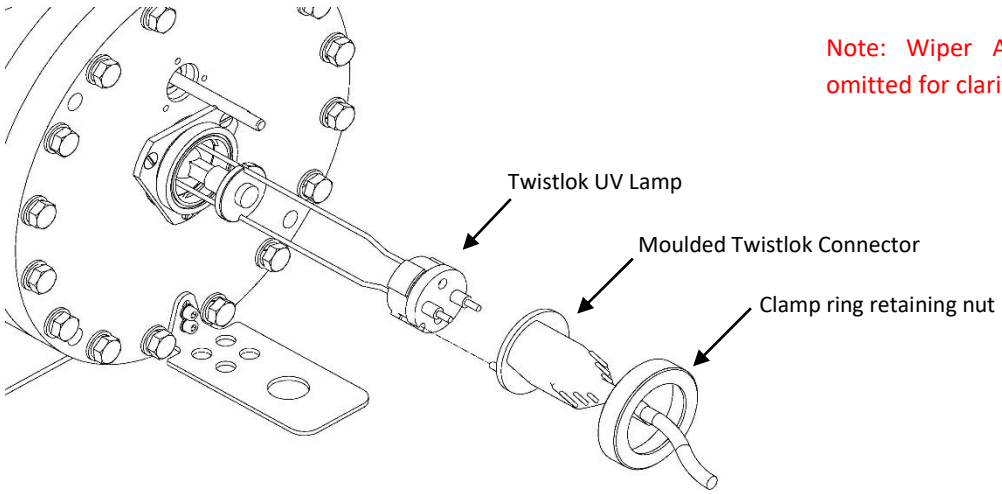

Note: Wiper Assembly omitted for clarity

Quartz Thimble Maintenance

Please refer to the Health & Safety Section at beginning of the manual for Symbol explanations. These are to be adhered to when carrying out the following maintenance procedures.

	

Quartz Thimble Extraction	
1	Follow the UV Lamp Extraction procedure detailed in the previous subsection
2	Remove the clamp ring, keeping one hand pushing on the clamp ring and carefully remove
3	Remove the 'O' ring seal.
4	Carefully remove the quartz thimble keeping it parallel to avoid damage.

Quartz Thimble Installation	
1	Carefully slide the new/cleaned quartz thimble into the hole in the end flange keeping it parallel so it emerges out of the other side of the chamber. If an automatic wiping system is installed ensure the thimble is gently guided through the wiper ring
2	Place the 'O' ring seal over the quartz thimble and locate into the O' ring groove. Ensure that the quartz remains central in the chamber
3	Place the clamp ring over the thimble and fasten with the screws finger tight initially. Then tighten the screws in a radial pattern, a quarter turn at a time until a 1-2mm solid flat bead can be seen on the seal. **Do not over tighten** **Ensure the seal does not leak.**

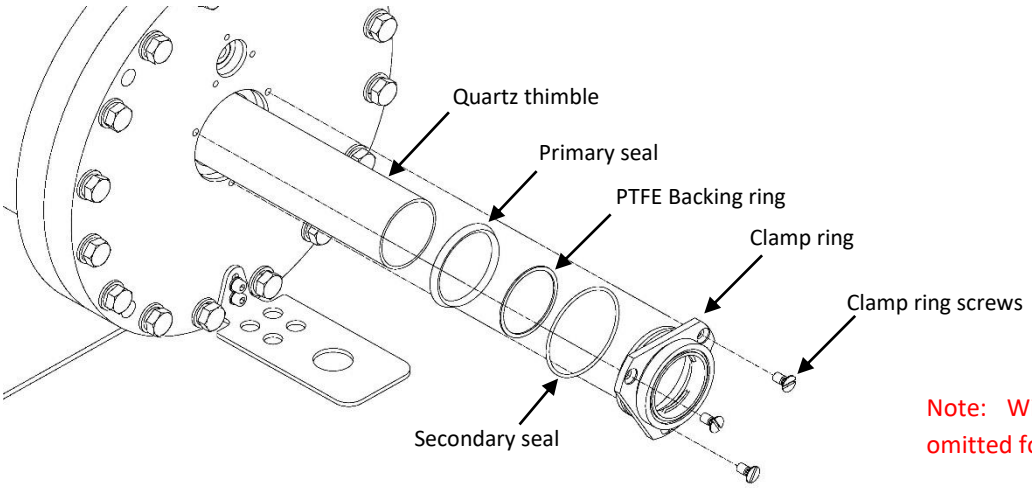

Note: Wiper Assembly omitted for clarity

UV Sensor Maintenance

UV Sensor Housing Maintenance

Please refer to the Health & Safety Section at beginning of the manual for Symbol explanations. These are to be adhered to when carrying out the following maintenance procedures.

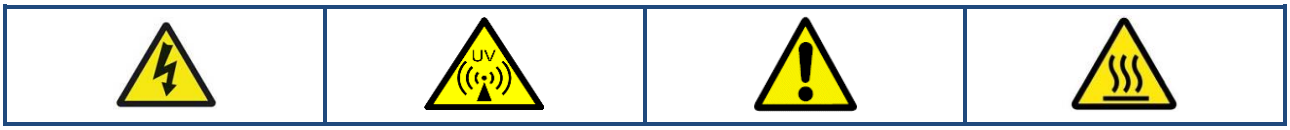

UV Sensor Housing Removal		
	AT-463 & AT-605 UV Probe Installed	AT-900 UV Probe Installed
1	Unscrew UV probe cable connector	
2	Unscrew UV probe and remove.	Unscrew UV probe adapter and remove the probe. Unscrew the UV Probe Housing from the window housing.
3	Unscrew the three screws and remove the window housing.	
4	Remove the upper window seal and carefully extract the window. If the window does not easily come out gently twist the window to break the lower seal. Remove the lower O' ring seal.	

UV Sensor Housing Installation		
	AT-463 & AT-605 UV Probe Installed	AT-900 UV Probe Installed
Before inserting a new/cleaned validated sensor quartz window, ensure all components are clean and dry. Ensure that no dirt or debris gets onto the UV sensor or quartz window as this may affect readings.		
1	Insert the lower 'O' ring seal. Carefully insert the new quartz window. Insert the upper 'O' ring seal.	
2	Replace the window housing, ensuring that the seal is correctly positioned. Install the screws only finger tight initially. **Tighten the screws in a radial pattern, each one a quarter turn at a time until tight.**	
3	Screw the UV Probe back onto the window housing.	Screw the UV Probe Housing onto the window housing. Insert the UV probe and screw the UV adapter to secure the UV probe
4	Connect the UV probe lead and screw down to fasten.	

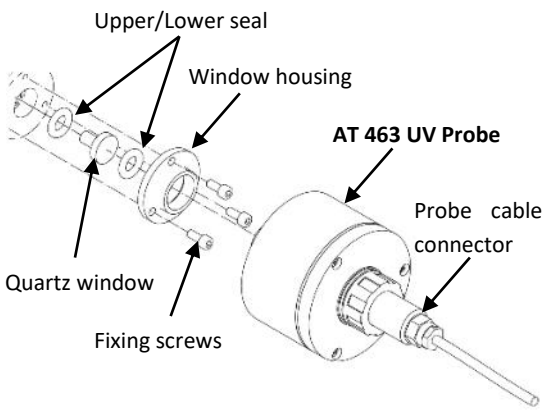

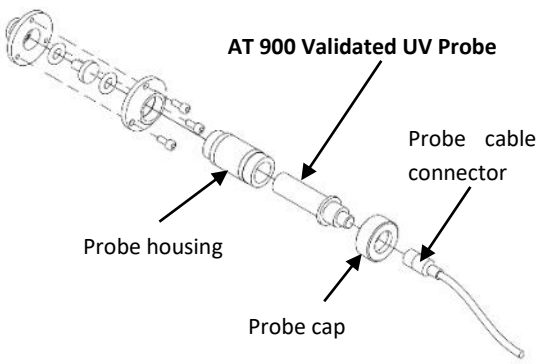

Wiper System Maintenance

Wiper Cover and Motor Maintenance

Please refer to the Health & Safety Section at beginning of the manual for Symbol explanations. These are to be adhered to when carrying out the following maintenance procedures.

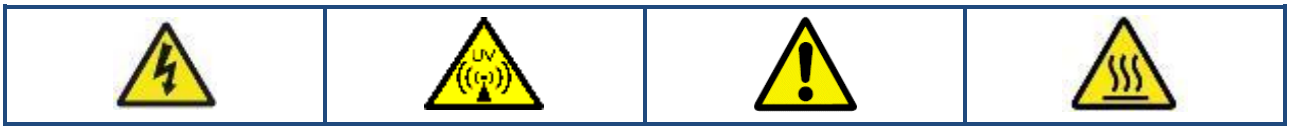

Wiper Cover & Motor Removal	
1	Unscrew the nylon nuts, remove small 'O' rings and remove the cover.
2	Disconnect the electrical connections on the motor, taking note of the cable positions. Unscrew the pillar retaining screws and the sensor cam coupling grub screw.
3	Remove the motor assembly.

Wiper Motor & Cover Installation	
1	Reinstall the Sensor Cam coupling on the wiper shaft. Install the motor assembly in the original position. Check that the motor shaft is located in the Sensor cam coupling.
2	Attach the wiper pillars using screws and tighten the Sensor cam coupling grub screw to connect the Wiper and motor shafts together.
3	Refit the wiper motor cover, and fasten with the seals and nylon nuts.

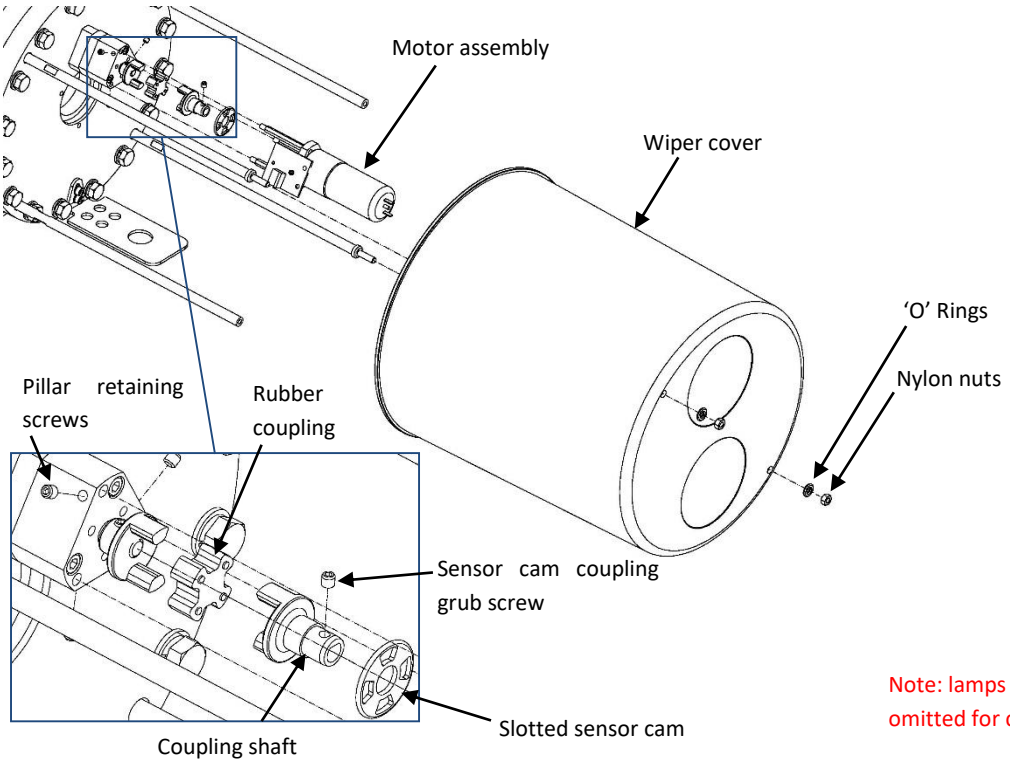

Wiper Bearing & Seal Maintenance

Please refer to the Health & Safety Section at beginning of the manual for Symbol explanations. These are to be adhered to when carrying out the following maintenance procedures.

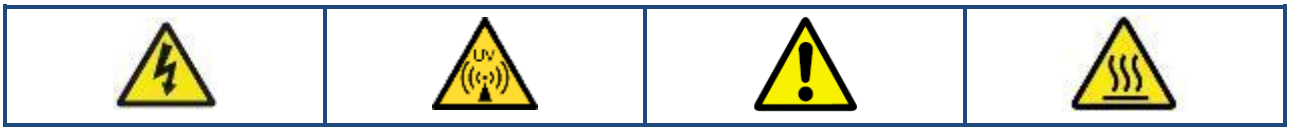

Wiper Bearing & Seal Removal	
1	Remove the motor assembly (see **Wiper Cover & Motor Removal** procedures)
2	Remove the grub screw and slide off the the coupling.
3	Unscrew the 3 bolts and remove the bearing housing. Remove the Bearing for inspection.
4	Remove nut and screw from the Thrust bush and slide it off the wiper shaft. Remove the Inner Bearing Housing screws and then remove the inner bearing housing and bearing.
5	Remove the seal housing and quad ring seals for inspection.

Wiper Bearing & Seal Installation	
Ensure that new seals are always installed when maintenance is carried out and the bearings are in good condition and oil if necessary.	
1	Insert Quad Ring Seal/Backing Ring/Quad Ring Seal into one side of the seal Housing and Quad Ring on the other side **WARNING: These components must be greased!** Slide the assembly on to the wiper shaft.
2	Replace the Inner Bearing Housing and bearing. Replace the three bolts into the inner bearing housing.
3	Replace the thrust bush and line up the fixing hole; fasten with the screw down.
4	Replace the Outer Bearing Housing and bearing and secure with bolts
5	Reinstall the coupling and secure with the grub screw. Check that the shaft can be turned by hand, It should feel tight but be movable by hand.

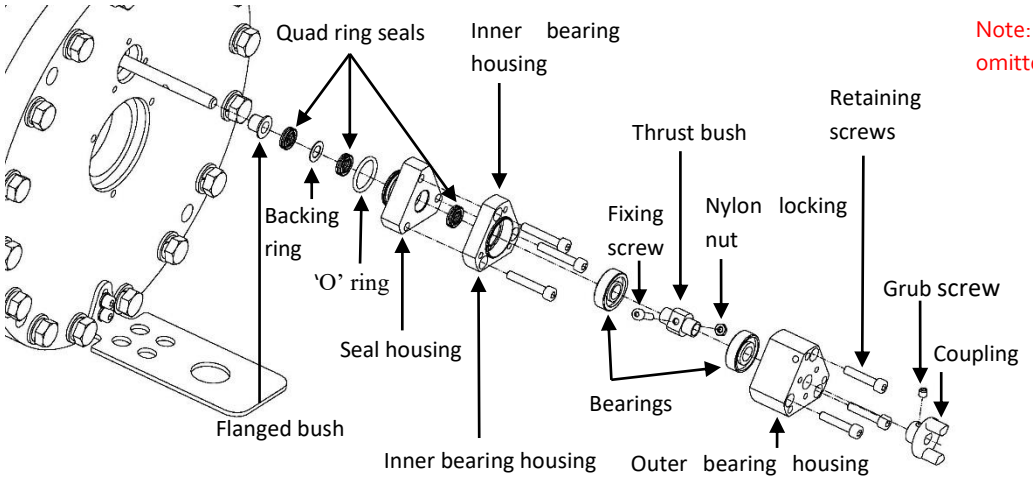

Note: Lamps & quartz omitted only for clarity

Wiper Blade Maintenance

Please refer to the Health & Safety Section at beginning of the manual for Symbol explanations. These are to be adhered to when carrying out the following maintenance procedures.

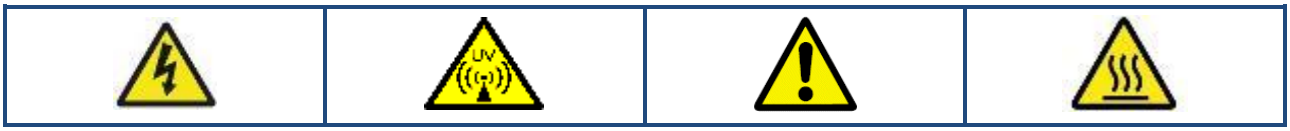

Wiper Blade Removal	
1	Remove the Motor assembly (refer to Wiper Cover & Motor Removal & Wiper Bearing & Seal Removal procedures)
2	Remove the UV Lamps & Quartz Thimble (refer to UV Lamp Extraction & Quartz Thimble Extraction procedures).
3	Unscrew the flange retaining bolts. This will allow the flange, the wiper carriage & the ACME shaft to be removed.

Wiper Blade Installation	
1	Replace the old wiper blades with the new blades and fit them accordingly.
2	Slide the drive side flange, the wiper carriage & the AMCE shafts back into the chamber & fix back in place with the flange retaining bolts (check the 'O' seal to see if needs to be replaced).
3	The Quartz Thimbles and UV Lamp should be re-inserted (refer to **Quartz Installation** & **UV Lamp Installation** procedures).
4	Re-fit the wiper motor assembly (refer to **Wiper Cover & Motor Installation** & **Wiper Bearing & Seal Installation** procedures**)**
5	If the carriage has not been moved then there should be no need to recalibrate the wiper, although it is recommended. If the carriage has been moved, recalibration of the wiper is imperative (refer to Automatic Wiper section)

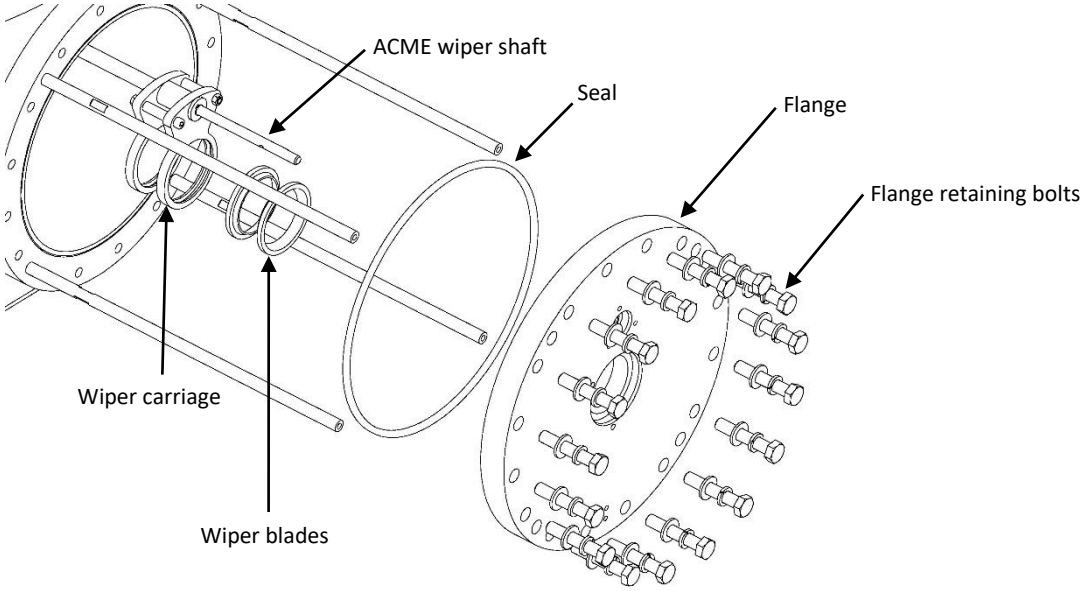

Single-Lamp Wiper Body Maintenance

Please refer to the Health & Safety Section at beginning of the manual for Symbol explanations. These are to be adhered to when carrying out the following maintenance procedures.

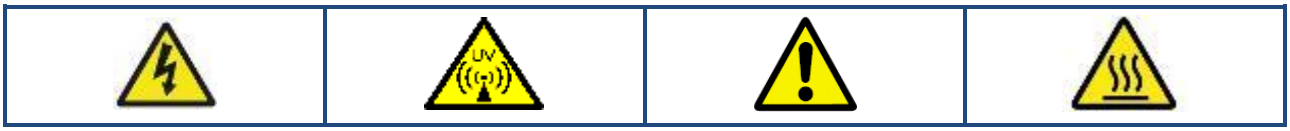

Wiper Carriage Removal	
1	Remove the Motor assembly (refer to **Wiper Cover & Motor Removal & Wiper Bearing & Seal Removal** procedures)
2	Remove the UV Lamps & Quartz Thimble (refer to **UV Lamp Extraction & Quartz Thimble Extraction** procedures).
3	Unscrew the flange retaining bolts. This will allow the flange, the wiper carriage & the ACME shaft to be removed.
4	Remove the Wiper carriage from the Wiper shaft.
5	Unscrew the Wiper body screws to release the Lead screw nut and Wiper carriages

Wiper Body Installation	
1	Replace Lead Screw Nut (if required).
2	Line up Wiper Carriage and Lead Screw Nut Fixing Ring with the Leads screw nut and screw together with the wiper body screws.
3	Screw the Wiper Assembly back onto the Wiper Shaft.
4	Re-calibration of the wiper is required after Wiper body removal (refer to **Automatic Wiper** section).

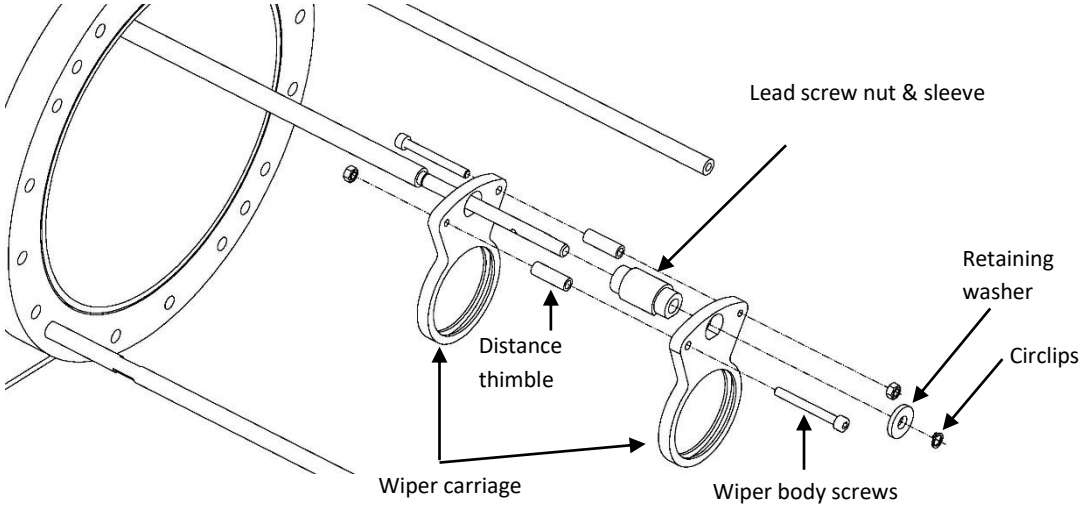

Multi-Lamp Wiper Body Maintenance

Please refer to the Health & Safety Section at beginning of the manual for Symbol explanations. These are to be adhered to when carrying out the following maintenance procedures.

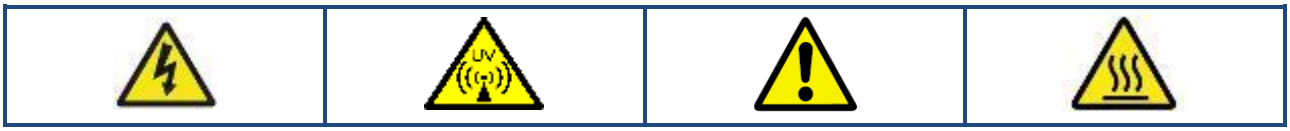

Wiper Carriage Removal	
1	Remove the Motor assembly (refer to **Wiper Cover & Motor Removal & Wiper Bearing & Seal Removal** procedures)
2	Remove the UV Lamps & Quartz Thimble (refer to **UV Lamp Extraction & Quartz Thimble Extraction** procedures).
3	Unscrew the flange retaining bolts. This will allow the flange, the wiper carriage & the ACME shaft to be removed.
4	Remove the circlip from one side of the wiper shaft and unscrew the wiper carriage assembly from the wiper shaft.
5	Unscrew the wiper carriage from one side of the wiper body lid. Remove one side of the wiper body lid by removing the wiper body screws.

Wiper Body Installation	
1	Replace Lead Screw Nut (if required) and insert inside the Wiper Body.
2	Screw is place both Wiper Body Lid's on either side of the Wiper Body ensureing the O'Ring Seal and flanged bush are between.
3	Screw in the place Wiper Carriage onto one side of the Wiper Lid.
4	Screw the Wiper Assembly back onto the Wiper Shaft, ensuring to clip the circlips back in place on the ends of the shaft.
5	Re-calibration of the wiper is required after Wiper body removal (refer to **Automatic Wiper** procedures).

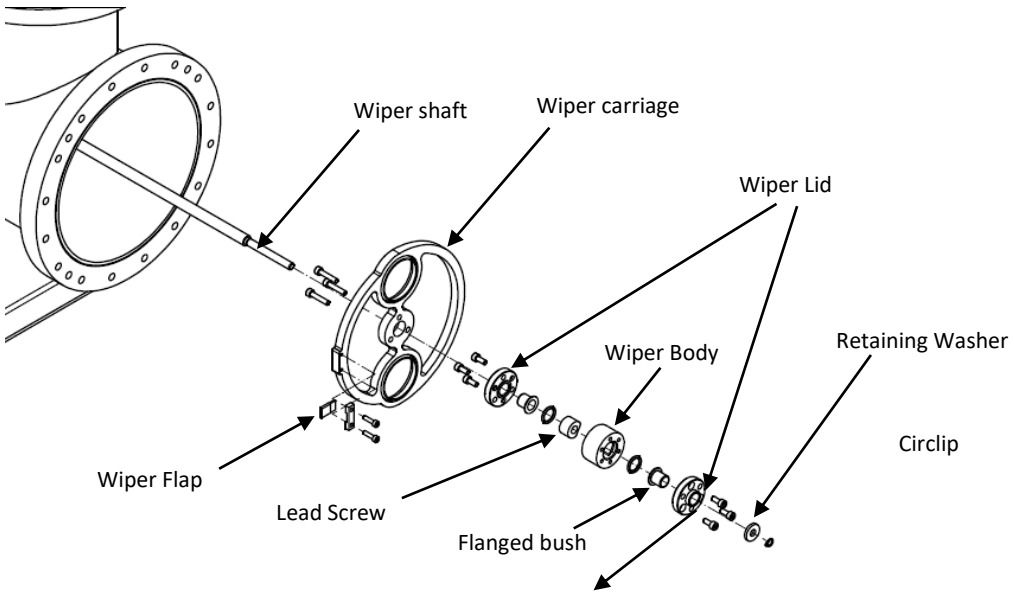

Spare Parts

General Assembly

Note: Typical of a UVMSC chamber

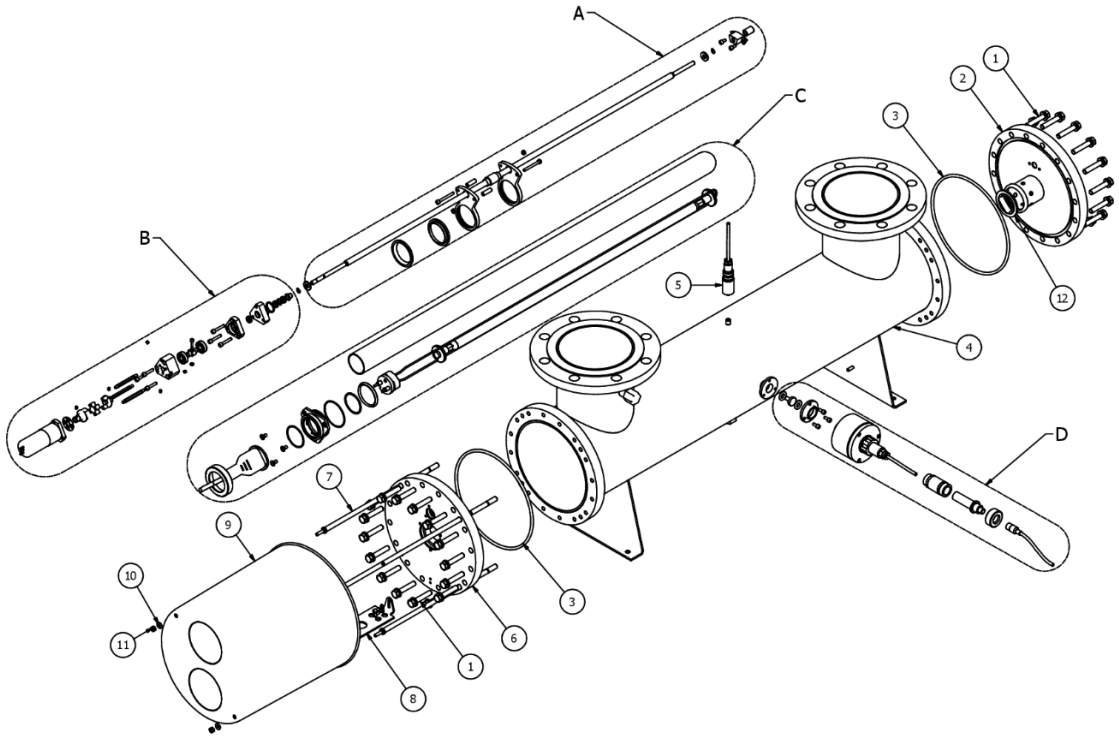

ITEM	PART NO.	DESCRIPTION
A	Automatic Wiper Carriage Assembly	
B	Automatic/Manual Wiper Drive Assembly	
C	Lamp & Quartz Assembly	
D	UV Sensor Assembly	
Note: the sizes of parts in this assembly may vary according to chamber size		
1	-	M10 x 55 Hex Head Bolt
2	-	Cup Flange
3	Refer to Maintenance Spares List	'O' Ring Seal
4	-	Chamber
5	W6168006	AT-487 PT100 Temperature Probe
6	-	Front Flange
7	-	Flange Slider Bar
8	-	Gland Plate
9	-	Dust Cover
10	-	'O' Ring
11	-	Nylon nut
12	Refer to Maintenance Spares List	49Dia Thimble Support Seal

Quartz & Lamp Assembly

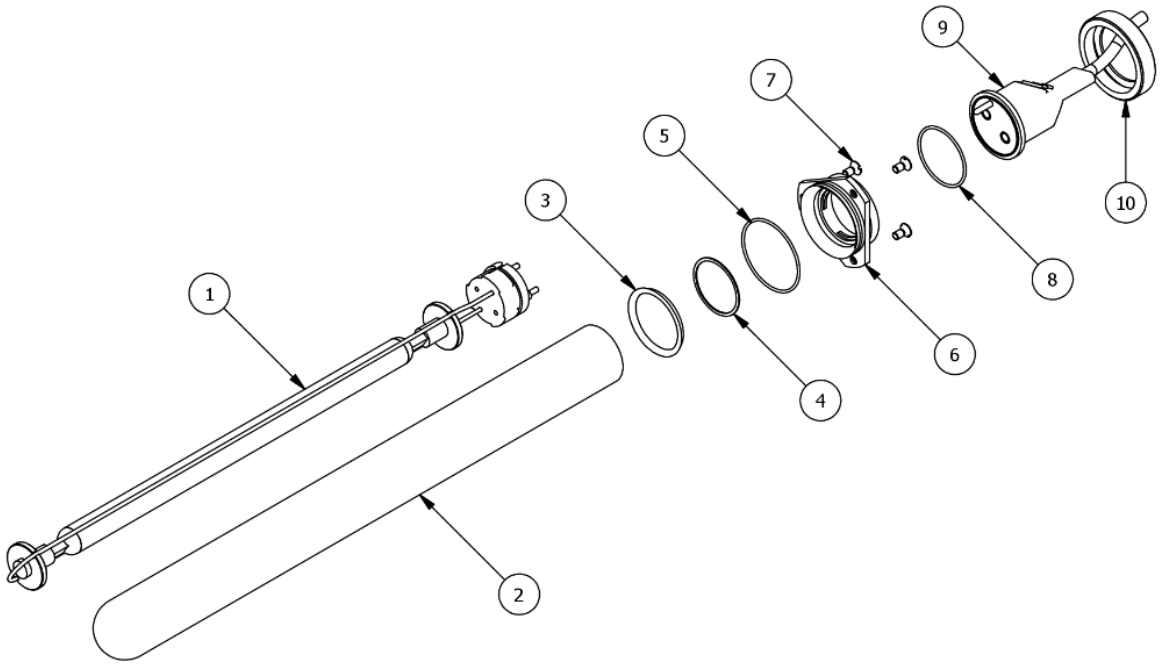

ITEM	PART NO.	DESCRIPTION
1	Refer to Maintenance Spares List	Twistlok UV Lamp
2	Refer to Maintenance Spares List*	Lamp Quartz Thimble
3	Refer to Maintenance Spares List	EPDM 'O' Ring (Primary)
4	Refer to Maintenance Spares List	PTFE Clamp Ring Gasket
5	Refer to Maintenance Spares List	EPDM 'O' Ring (Secondary)
6	W5470101	Clamp Ring - Screwed - Q49
7	W3200480	M6 x 12 Slotted CSunk flat head screw
8	W3300050	EPDM 'O' Ring
9	-	Moulded Twistlok Lamp Connector
10	W5470200	Clamp Ring - Screwed Retainer

UV Sensor Assembly

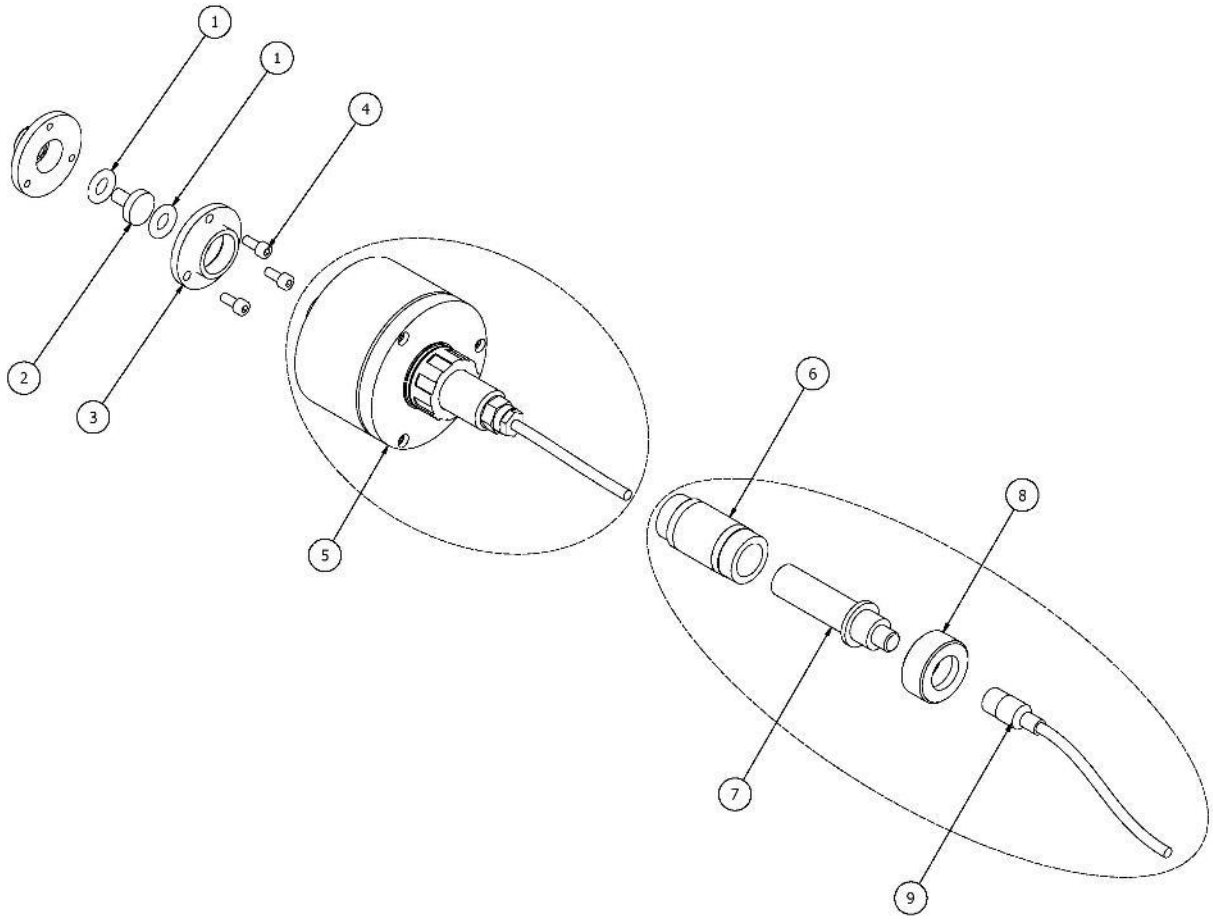

ITEM	PART NO.	DESCRIPTION
1	Refer to Maintenance Spares List	EPDM 'O' Ring
2	Refer to Maintenance Spares List	Quartz Window (Top Hat)
3	W8010005	UV Probe Housing - Loose Section
4	-	M5 x 12 Sckt Head Bolt
AT 463 Probe Only		
5	W6163000	AT-463 UV Probe
AT 900 Validated UV Probe		
6	W8000300	Probe Adaptor Base
7	Refer to Data-book	AT 900 Validated UV Probe (ONORM)
8	W8000305	Probe Adaptor Cap
9	-	UV Probe Connector & Cable

Automatic Wiper Drive Assembly

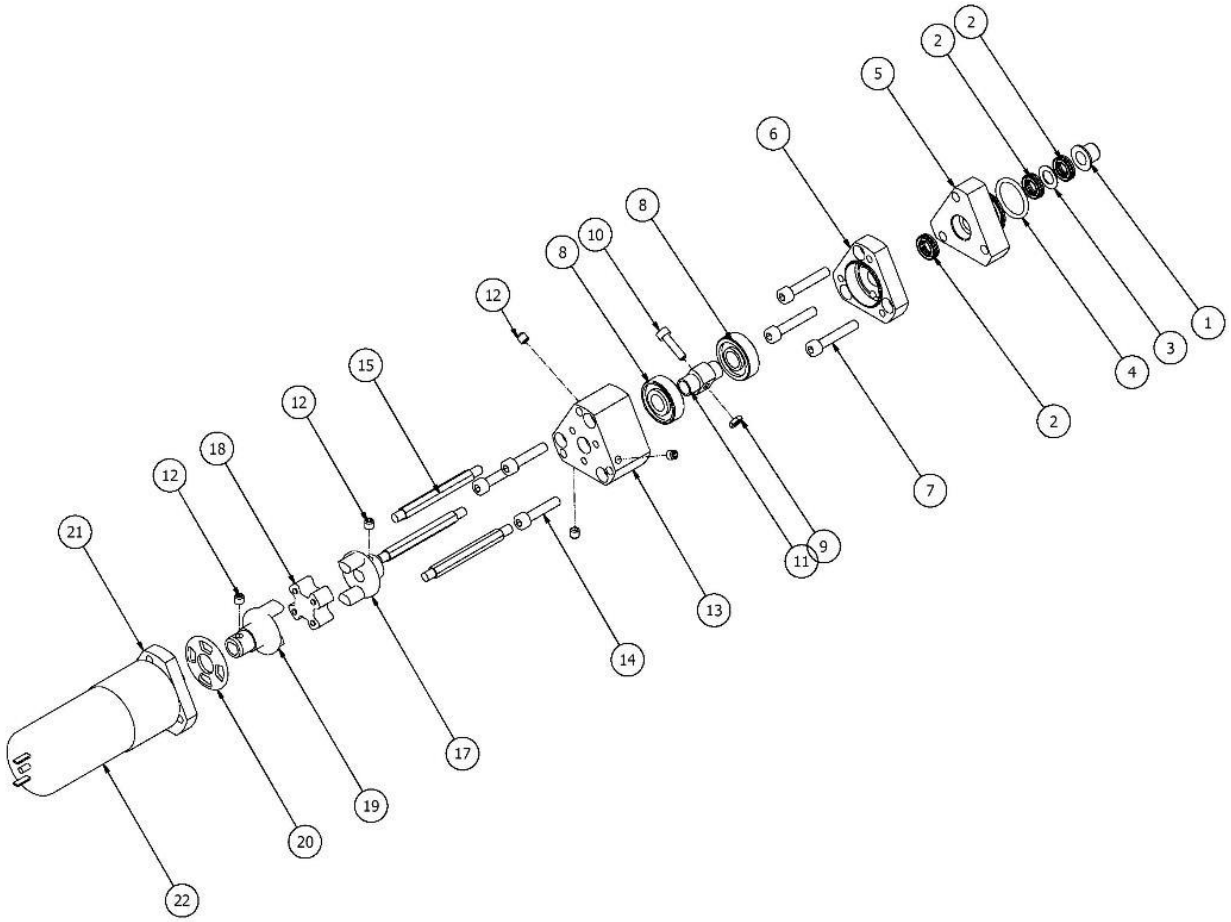

ITEM	PART NO.	DESCRIPTION
1	W5410398	Flanged Bush
2	Refer to Maintenance Spares List	Nitrile Quad Ring
3	Refer to Maintenance Spares List	PTFE Backing Ring
4	Refer to Maintenance Spares List	EPDM 'O'Ring
5	W5415040	12mm Shaft - Seal Housing
6	W5415050	12mm Shaft - Bearing Housing No1
7	-	M5 x 30 Sckt Head Bolt
8	W5410071	Angular Contact Ball Bearing
9	-	M4 Nylon Nut
10	-	M4 x 10 Sckt Head Bolt
11	W5415070	12mm Shaft - Lead Screw Thrust Bush
12	-	M5 x 5 Hex Grub Screw
13	W5415060	12mm Shaft - Bearing Housing No2
14	-	M5 x 25 Sckt Head Bolt
15	W5415080	12mm Shaft - Mounting Pillar
17	W5415100	12mm Shaft - Coupling Shaft
18	W5411002	Wiper Motor Rubber Coupling
19	W5415110	12mm Shaft - Coupling Motor
20	W5415120	12mm Shaft - Sensor Cam
21	W5415090	12mm Shaft - Motor Fixing Plate
22	W4921670	Wiper Motor

Single Lamp Automatic Wiper Carriage Assembly

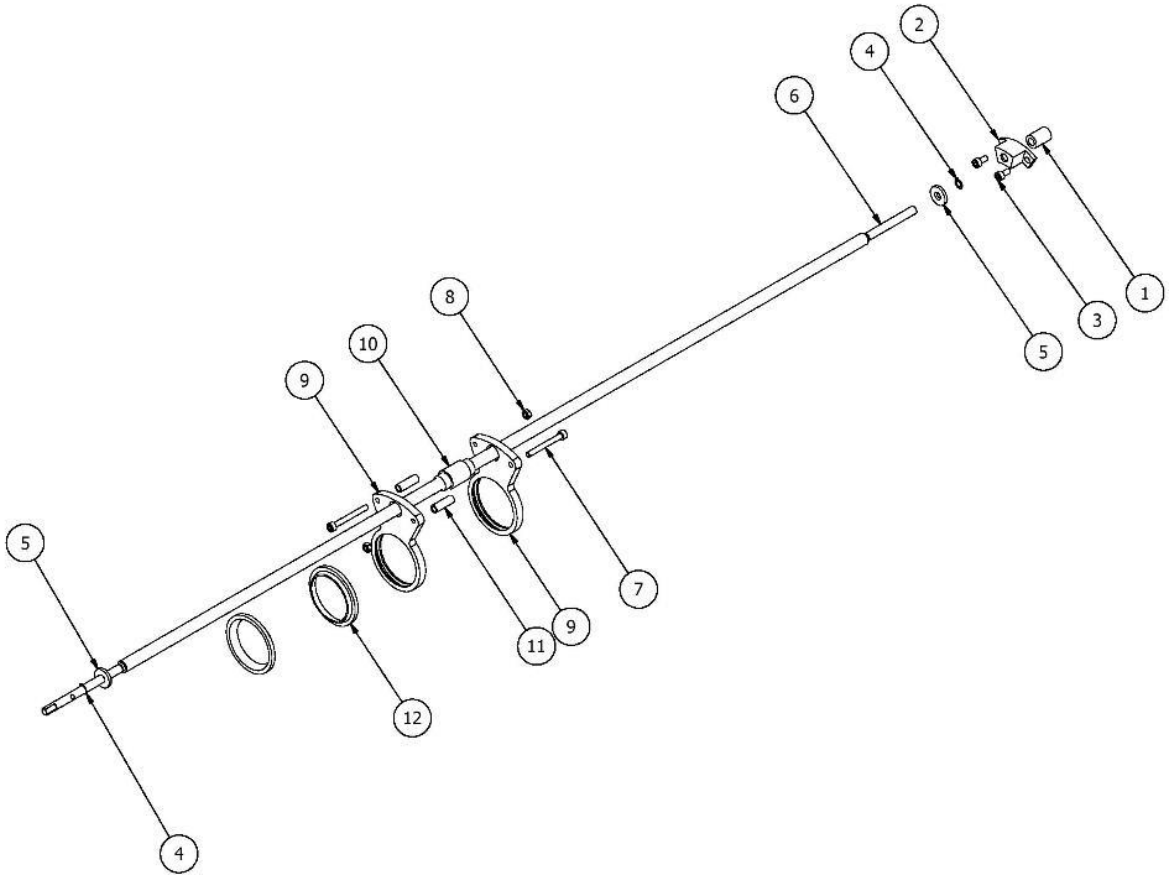

ITEM	PART NO.	DESCRIPTION
1	W5410023	Lead Screw Bush
2	W5450070	Lead Screw Bush Segment
3	-	M5 x 10 Sckt Head Bolt
4	W5415140	12mm Shaft - Wiper External Eclip
5	W5415030	12mm Shaft - Wiper Washer
6	-	ACME Wiper Shaft
7	-	M5 x 45 Socket Head Bolt
8	-	M5 Hex Nut
9	-	Wiper Carriage
10	Refer to Maintenance Spares List	Wiper Carriage Lead Screw Nut
11	W5410018	Wiper Carriage Plate Distance Thimble
12	Refer to Maintenance Spares List	49-Dia Wiper Rings

Multi-Lamp Automatic Wiper Carriage Assembly

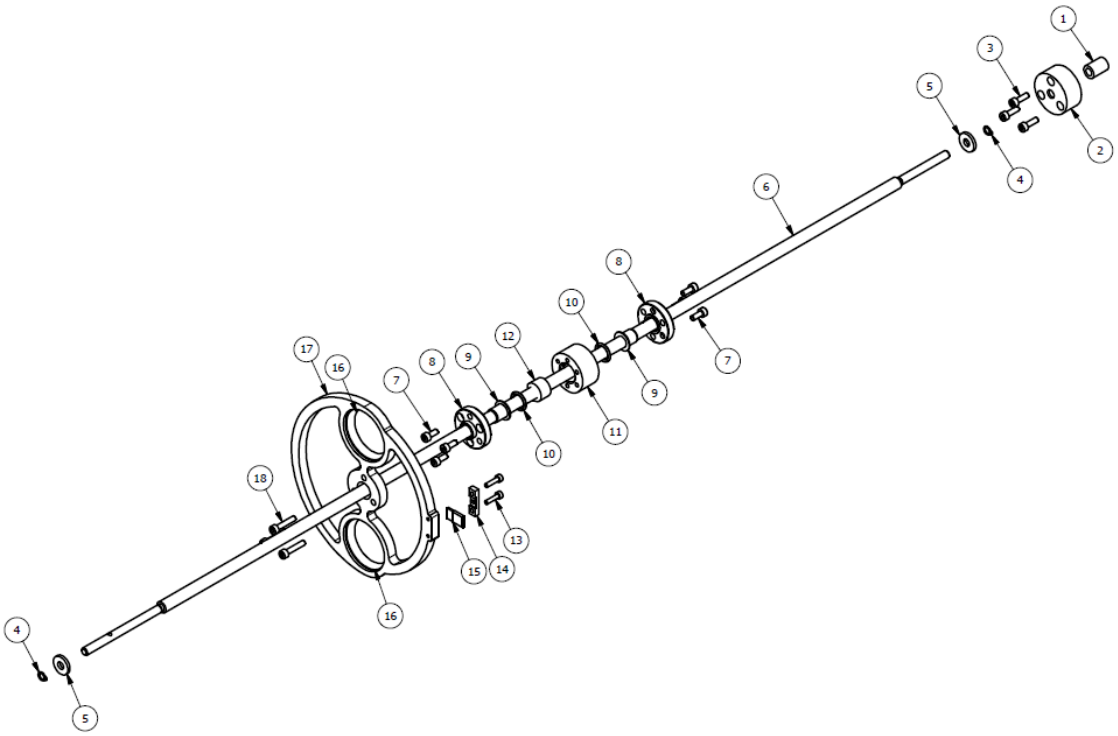

ITEM	PART NO.	DESCRIPTION
1	W5410023	Wiper - Lead Screw Bush
2	W5410027	Wiper - Lead Screw Bush Fixing Ring
3	-	M5 x 20 Sckt Head Bolt
4	W5415140	12mm - Circlips Retaining Washer
5	W5415030	12mm – Wiper Washer
6	-	Wiper Shaft
7	-	M5 x 10 Sckt Head Bolt
8	W5415010	12mm Shaft - Wiper Body Lid
9	W5410400	12mm - Flanged Bush
10	W3100160	EPDM 'O' Ring
11	W5415000	12mm Shaft - Wiper Body
12	Refer to Maintenance Spares List	Lead Screw Nut
13	-	M4 x 16 Sckt Head
14	W3400154	Window Wiper Flap Fixing Bracket
15	Refer to Maintenance Spares List	Window Wiper Flap
16	Refer to Maintenance Spares List	49-Dia Wiper Rings
17		Wiper Carriage
18	M5 x 40 Sckt Head Bolt	M5 x 40 Sckt Head Bolt

Maintenance Spares List

ITEM	PART NO.	DESCRIPTION	UVMSC-73-4	UVMSC-273-8	UVMSC-373-8	UVMSC-473-8	UVMSC-673-8
General Assembly							
3	W3400170	EPDM 'O' Ring 129.5 x 3 (4")	2				
3	W3300360	EPDM 'O' Ring 229.3 x 5.7 (8")		2	2	2	2
12	W3400650	49Dia Thimble Support Seal	1	2	3	4	6
Quartz & Lamp Assembly							
1	W1501761	UV Lamp EB MP7373C49L0970 (Cross) WEE/FC0081UW	1	2	3	4	6
2	W2100850*	Quartz Thimble QTH-49 x 1100 (2mm thick)	1	2	3	4	6
3	W3200450	EPDM 'O' Ring 49 x 5.0 v70	1	2	3	4	6
4	W3500025	PTFE Clamp Ring Gasket (49.5 x 44.5 x 1)	1	2	3	4	6
5	W3200480	EPDM 'O' Ring 59 x 2.0	1	2	3	4	6
UV Sensor Assembly							
1	W3400157	EPDM 'O' Ring 13 x 3.5 Window Seal (QWS-20)	2	2	2	2	2
2	W2900320*	Quartz Window QWI 20 x 15 x 5 (Top Hat)	1	1	1	1	1
Automatic Wiper Drive Assembly							
2	W3500100	Nitrile Quad Ring 7.52 x 3.53	3	3	3	3	3
3	W3500105	PTFE Backing Ring 13.9OD x 8.1ID x 0.5Thk	1	1	1	1	1
4	W3200025	EPDM 'O' Ring 21 x 2.0 V70	1	1	1	1	1
Single Lamp Automatic Wiper Carriage Assembly							
10	W5410016	SP Wiper Carriage Lead Screw Nut	1				
12	W3400600	49-Dia Wiper Rings in 80 Shore EPDM	1				
Multi-Lamp Automatic Wiper Carriage Assembly							
12	W5415020	12mm Shaft - Lead Screw Nut		1	1	1	1
15	W3400151	14x3 Window Wiper Flap		1	1	1	1
16	W3400600	49-Dia Wiper Rings in 80 Shore EPDM		2	3	4	6

*Standard part shown. For non-standard options, please refer to the Data-book to confirm

ATUV-1040 Automatic Quartz Wiping System

IMPORTANT: This section of the manual is only applicable to systems that have an Automatic Wiping Mechanism installed on the chamber. If you are unsure whether your system has an Automatic Wiper Mechanism installed, please contact **atg UV Technology**.

General Operation

The ATUV-1040 module controls the operation of the automatic wiping mechanism. The system uses an infra-red optical sensor and a slotted disc connected to the wiper motor shaft to detect pulses of infra-red light as the shaft turns. The light pulses are converted to an electrical signal allowing the system to count the number of pulses and determine the length of the chamber and know the wiper's exact position within the chamber.

Upon applying power to the wiper module, a calibration check is performed. If the system is not calibrated, the module waits for the calibration process to be initiated. If the system is calibrated, the wiper will run automatically at a user-defined frequency.
If power is removed during a run, the wiper will resume running immediately when power is restored.

LED Indicators & Push Buttons



LED/Push Button	Description
OTPO PULSE (Optical Sensor Detector)	This LED is in series with the optical sensor's infra-red detector and will pulse on/off when the wiper motor shaft turns. **Note**: When the wiper motor is not running, this LED could be either OFF or ON depending on the position of the slotted disc relative to the optical sensor.
OPTO HTHY (Optical Sensor Emitter)	This LED is in series with the optical sensor's infra-red emitter and will be permanently lit when the emitter is functioning correctly.
LINK (Emergency Stop)	This LED will be on when the emergency stop input is active (closed). This LED ***MUST*** be on for the wiper motor to operate (run or calibrate).
STATUS (System Healthy/Fault Status)	This LED shows the following states: LED Off – System not calibrated. Slow Flash (once/second) – Wiper motor stalled or optical sensor failed. Fast Flash (5 times/second) – Wiper motor current has exceeded the trip current setting. LED Permanently On – System is healthy and calibrated.
CAL (Calibrate)	Press and hold for more than 0.5 seconds to initiate the calibration process.
RUN (Force Run)	Pressing this button for between 0.2s and 2s initiates a run. Pressing this button for between 4s and 6s initiates a run to the service position. **Note:** A run cannot be initiated unless the system is calibrated.

Connection Diagrams



Terminal	Description
1	No Connection
2	Optical Sensor Common
3	Optical Sensor Emitter
4	Optical Sensor Detector
5	Wiper Motor Positive
6	Wiper Motor Negative
7	Emergency Stop Input 1
8	Emergency Stop Input 2
9	Run/Calibrate Input 1
10	Run/Calibrate Input 2
11	System Healthy Output (Relay N/O contact)
12	System Healthy Output (Relay COM contact)

Important! The Motor and Optical Sensor connections are polarity conscious; care should be taken to ensure they are wired correctly at the terminals.

Note! The Emergency Stop and Run/Calibrate inputs are volt-free and are activated by connecting their respective inputs (1 & 2) together by a switch or relay.

Note! The system output relay is energised (contacts closed) when the system is healthy and calibrated.

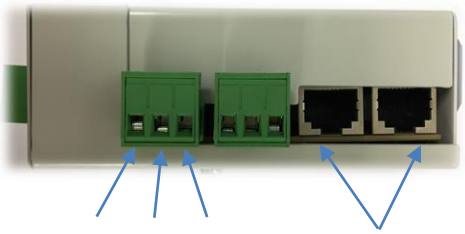

DIP-Switch Settings

DIPSW1 – System Setup Dip-Switch



This switch allows the operator to setup the wiper system to function correctly and with the correct wiping frequency.
It also allows the operator to calibrate the wiper system

DIP 1 - 3 - Wiping Frequency Setup

Frequency	Never *	15 Mins	30 Mins	1 hour	2 Hours	6 Hours	12 Hours	24 Hours
DIP1	OFF	OFF	OFF	OFF	ON	ON	ON	ON
DIP2	OFF	OFF	ON	ON	OFF	OFF	ON	ON
DIP3	OFF	ON	OFF	ON	OFF	ON	OFF	ON

***** If the Frequency is set to 'Never' (DIP1-3 = OFF), this allows the frequency of the wiper to be controlled via the Control System's Wiper Run Interval Parameter (Refer to Control Operation section of the Manual).

Important! DIP Switches 4 – 8 are for internal use only and should not be altered.

Calibration

For correct operation, the wiper must first be calibrated. Calibration allows the wiper module to determine the length of the chamber and park the wiper at the home position at one end of chamber. The calibration process is automatic but must be initiated in one of the following ways:

1. Send a Calibrate Command via the **Spectra** Control System Interface (Refer to Control Operation Section of Manual).
2. Pressing the calibrate button on the wiper module.
3. Activate the wiper module's Run/Calibrate digital input for between 4 and 6 seconds.

Once calibration is initiated, the status LED is extinguished and the wiper moves toward the end of the chamber nearest the home position. The optical detector LED will flash. Once the wiper reaches the end, the wiper's direction of travel is reversed and the wiper moves toward the opposite end of the chamber, recording the chamber's length as it travels. Once the opposite end of the chamber is reached, the wiper's direction of travel is reversed once again and the wiper moves back to the home position. On successful calibration, the status LED will be permanently lit and the system healthy relay energised (normally-open contacts will close).

Run

A run will automatically occur periodically once the wiper module is calibrated. The run frequency is determined by either the Wiper Run Interval parameter on Control Interface (Refer to Control Operation section of Manual), or SW1, SW2 and SW3 (see Section 'DIP Switch Settings').
A run can also be initiated in one of the following ways:

1. Send a Calibrate Command via the Control System Interface (Refer to Control Operation Section of Manual).
2. Pressing the run button on the wiper module
3. Activate the wiper module's Run/Calibrate digital input for between 0.2 and 2 seconds or for more than 8 seconds respectively

Note! Any attempt to initiate a run whilst the system is not calibrated or a run is already in progress is ignored.

Service Position

To facilitate removal of UV lamps during servicing, the wiper can be moved to a position 1/3rd along the chamber length from the home position in one of the following ways:

1. Press the RUN button on the wiper module for between 4 and 6 seconds.
2. Send a service command to the wiper module over the MODBUS communication interface (Refer to Control Operation section of the Manual)

TroubleShooting

Note: If a wiper fault is to occur, the Spectra II Membrane interface will display 'Wiper Fault'. By pressing enter on this message, the fault can be diagnosed in more detail by pressing Enter.

Fault Description	Possible Cause	Possible Solution
Not Calibrated	Wiper has lost its calibrated memory The wiper has been put into service mode (STATUS LED is extinguished)	Follow Calibration Procedures (initiated in 3 possible ways)
Motor Current Trip	ATUV-1040 has detected an over current (STATUS LED Fast Flashing - 5 times/second). - Wiper mechanism is jammed. - Calibration has been lost/corrupted	Ensure the internal/external wiper parts are not causing the wiper jam/seize. The wiper shaft should be able to be rotated by hand Re-calibrate the Wiper
Loss Of Pulses	ATUV-1040 has detected a Loss of pulses error (STATUS LED Fast Flashing - 1 times/second). - **OPTO PULSE LED** does not flash when motor is turning	Check dust cover is in position. (Direct sunlight or a bright light can blind the opto sensor) Ensure the opto sensor is correctly positioned over the cam Ensure the motor is running when attempting a sweep.
Safety Stop	LINK LED on the ATUV-1040 has extinguished - LINK signal has been removed	Ensue the LINK signal is re-established and the LINK LED is illuminated
No Motor Current	The ATUV-1040 module is not measuring any current from the motor	Ensure the connections to the motor are properly installed Ensure the motor turns when 24Vdc is applied.
No Pulses	**OPTO PULSE LED** does not flash when motor is turning	Check dust cover is in position. (Direct sunlight or a bright light can blind the opto sensor) Ensure the opto sensor is correctly positioned over the cam Ensure the motor is running when attempting a sweep.
Minimum Chamber Length	Calibrated length is less than the pre-determined minimum	Ensure the internal/external wiper parts are not causing the wiper jam/seize. The wiper shaft should be able to be rotated by hand
Maximum Chamber Length	Calibrated length is greater than the pre-determined minimum	Check that the threads on the wiper carriage Lead Screw Nut have not worn allowing the shaft to rotate freely
Run Time Exceeded	Wiper has ran for longer than expected during calibration	Check that the threads on the wiper carriage Lead Screw Nut have not worn allowing the shaft to rotate freely

Maintenance Advice

The level and type of contamination within the fluid being treated and the frequency of wiping will define the frequency of maintenance action required, therefore the wiper system should be inspected frequently by a competent person to determine if the primary seal has broken-down.

If the seal is leaking, there will be seepage of the treated fluid from the wiper shaft hole or the 3mm-diameter pilot holes in the seal housing.

Consult the Maintenance section of this manual for details on how to carry out maintenance of the Automatic Wiping system.

Spectra II atg Membrane Operation V4

Spectra II Membrane Control System

Spectra II is an automated control system developed by atg UV Technology to control and monitor the operation of its UV Disinfection systems.

Components

The Spectra II Control system consists of the following components:

- Spectra II Membrane
- ATUV-1020 (Common I/O)
- ATUV-1031 (Lamp module)
- ATUV-1040 (Wiper Module) – If fitted

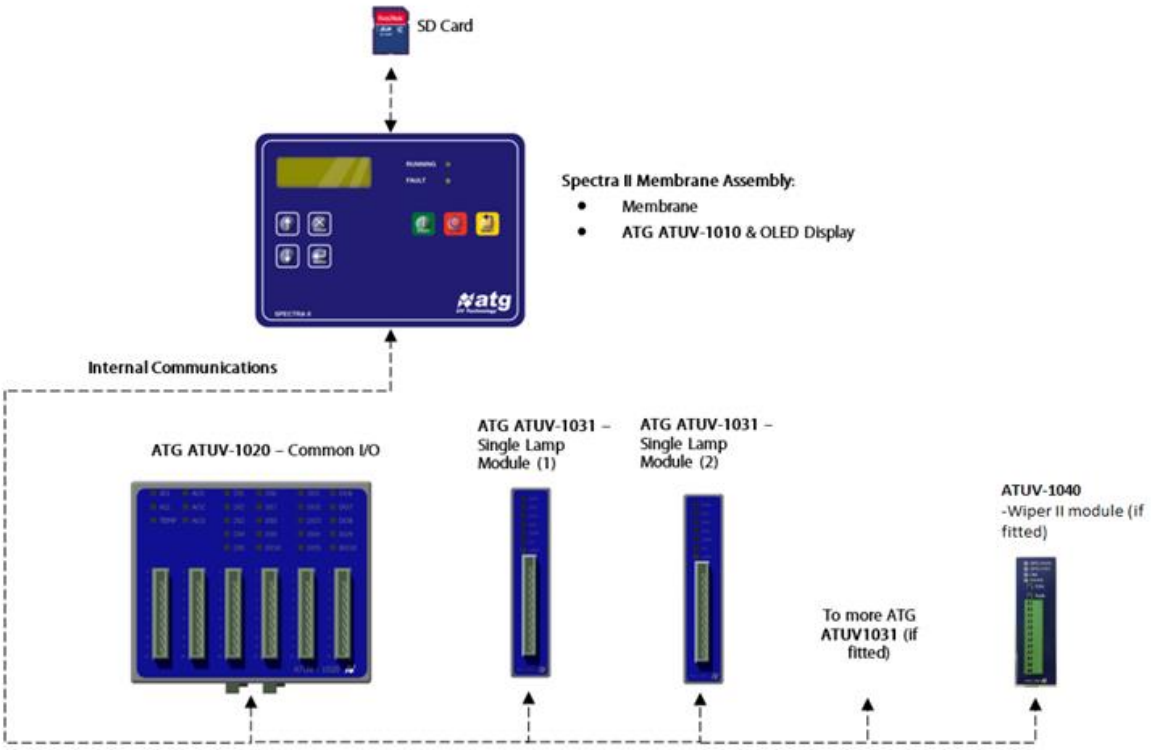

Spectra II Membrane

Spectra II control panels are operated via the front utilising a 4 line OLED display and a pushbutton membrane:



Feature	Description
	Pressing the Start button activates the start-up sequence, turning on the lamp(s). Note: Pressing Start will have no effect if: • A critical or fatal fault is active • Restrike timer (see below) is running • Spectra is in remote/comms control mode
	Pressing the Stop button will turn off the lamp(s) and start the re-strike timer. This timer will inhibit the lamp(s) from being struck again for a defined period (usually 6-8 minutes) to allow a sufficient cool down time otherwise a strike failure may occur.
	The Reset button is used to re-set any faults that have occurred. If a fault is displayed it is good practice to record the fault and the time/date then reset the fault (if possible unless the fault still exists) and attempt to restart the unit once.
RUNNING LED	Illuminates when system is in Running Mode. Flashes quickly in Start-up Mode. Flashes slowly if system is waiting for a signal from the Process Interlock.
FAULT LED	Illuminates when there is a fault. If this LED is on but no fault is displayed, scroll through using the up and down arrows until the fault is displayed.

ATUV1010 – Main Board

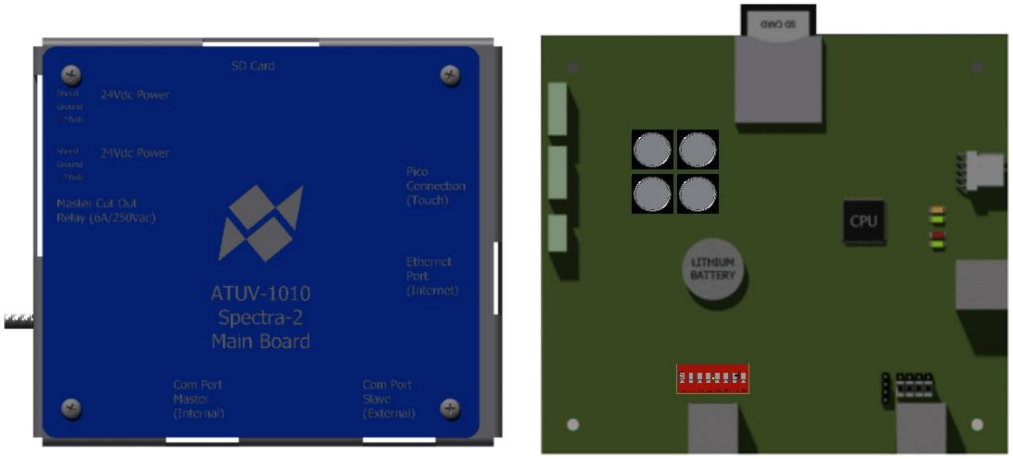

The ATUV-1010 board controls all critical operations including the system operation and customer communications, and is the central part of the Spectra II control system. All external modules including ATUV-1020 and ATUV-1031 are connected via an internal communications network. The ATUV-1010 also has a removable SD card used for storing various files for the Spectra to operate.

Comms Port Master (Internal)

This connection provides communications from the ATUV1010 (Mainboard) to the ATUV1020 (Common I/O) and ATUV1031 (Single Lamp Module) via a RJ45 connection.

Comms Port Slave (External)

This connection provides communications from an external Modbus RTU device (master) with the Spectra II operating as a slave device with use of an RJ45 connection using Modbus Protocol. The master device should initiate communications, while the Spectra responds to requests accordingly for data or an action to be taken. The Spectra can be assigned a MODBUS SLAVE ADDRESS ranging from 0-99 when being used as a slave on a network. For further information, please refer to the **Modbus Communication** Section.

Ethernet Port (Internet)

This connection enables the system to monitor and review the Spectra data over the internet. This can be achieved by either using an Ethernet connection with internet access or a Wi-Fi adapter to connect to a Wi-Fi with internet access.

LED's

The Main board has 4 that are used for status indication.

From Top to Bottom:

LED	Description	Status	Indication
3	This LED indicates if the Master Cut-out relay is energised (closed) or de-energised (open). This relay interrupts the electrical current to the Lamp contactors upon a Fatal/Critical Fault	ON	System is healthy, no faults exist
		OFF	System is not healthy, Fatal/Critical Faults may exist
4	This LED indicates if there is power to the Spectra	ON	Power to the Spectra
		OFF	No power to the Spectra
1	This LED indicates the software status	ON	Software successfully loaded & running correctly
		OFF	Software load fault
		FLASHING	Software loading
2	This LED indicates the status of the SD card	ON	SD card healthy
		OFF	SD card not healthy or not found

During normal operation, all 4 LED's should be illuminated.

Headers

The ATUV-1010 has various headers which are used to configure the communications internally and externally.

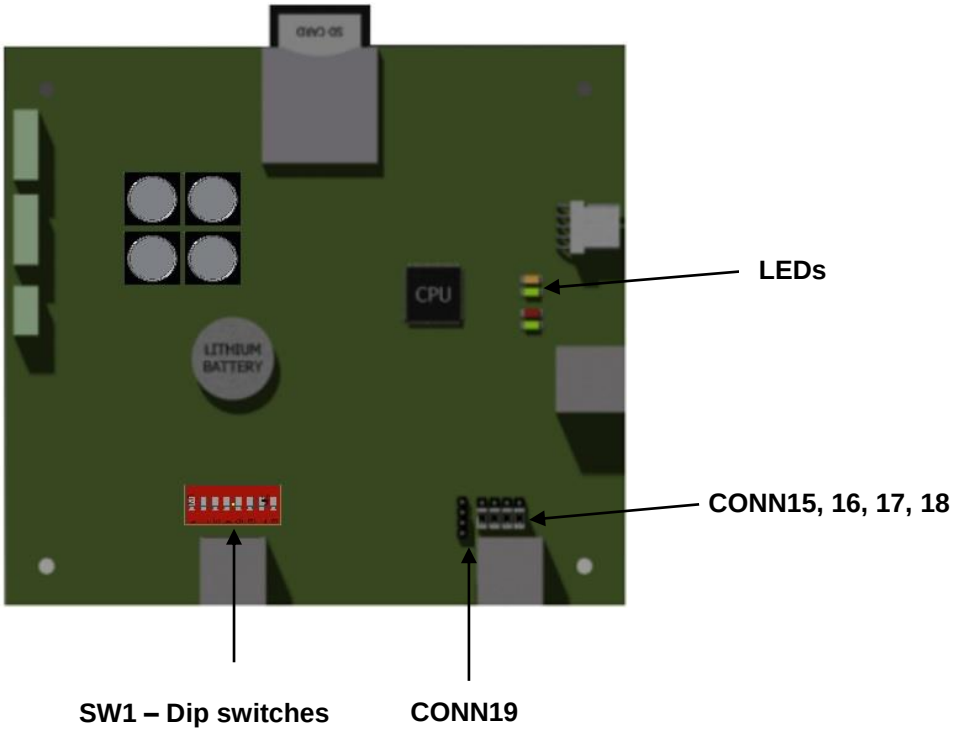

COMM Port Master (Internal Use Only)

SW1 – Dip Switches

These dip switches are for internal use only and should not be altered.

COMM Port Slave (External)

CONN15, 16, 17, 18

These pins are used to reverse the polarity of Rx and Tx. As standard, headers should be placed on bottom 2 pins as illustrated in the image above. (For more information, refer to the Modbus Communication section).

CONN19

These pins are used to select between 4 wire interface and 2 wire interface. (For more information, refer to the Modbus Communication section).

SD Card

The SD card stores everything the Spectra II needs to function. It stores all the systems variables, the menu structure, the version of Spectra II program and log files (if enabled).

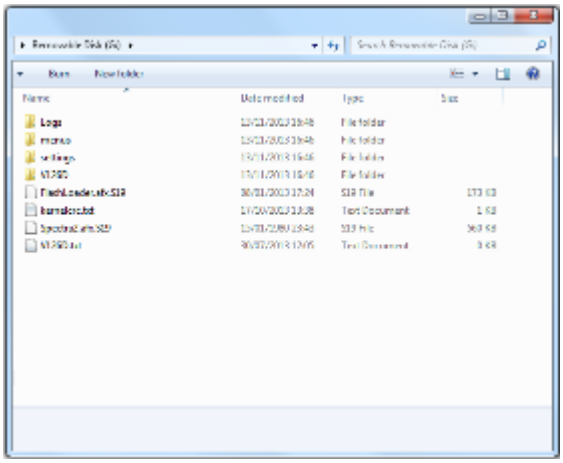

XML Notepad 2007 software is required to edit certain information and variables (.xml files) and can be downloaded for free from the *Download Centre* on the *Microsoft* website.

SD Card Files

Setting Files

The following file stores the system parameters:

Config.xml - This file stores all the system parameters. Current variables can be altered using XML Notepad simply by opening the file and selecting the desired variable to be changed from the relevant location. For example, see illustration below for editing Flow Rate:

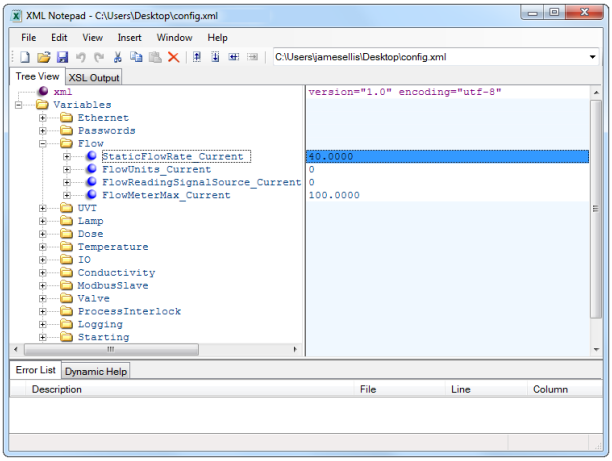

Note: When the desired variable/s has been altered, save and close the file.

Menu Files

This folder stores all the information relating to the menu structures that appear on the 4 line OLED display. This information is factory set and should not be altered.

Software Files (Also located on the Root of the SD Card)

This folder contains the Spectra Software programs. These files should not be altered.

Log Files

The following files are not of use to the user, but may be used in the unlikely event of a malfunction.
Logfile(1).csv - These files store all the data logs. Each CSV file will contain 1000 records with the latest file being the highest number (For example once Logfile1 reaches 1000 records then Logfile2 will be created.)

Common I/0 (ATUV-1020)

The Common I/O is the main interface module and is located inside the panel consisting of various Analogue/Digital inputs and outputs:

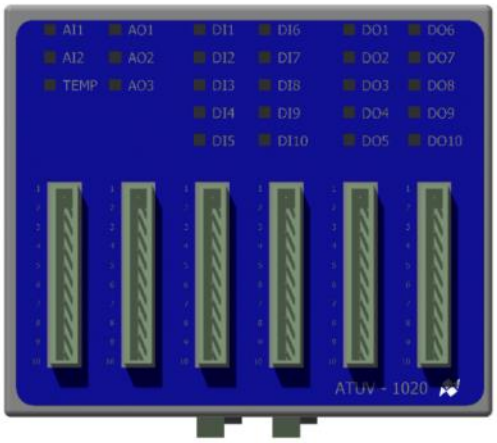

LEDs

The Digital Input & Output LED lights illuminate when energised and extinguish when de-energised.

For the **Analogue Inputs**, each LED indicates the following:

Condition	Range
ON	> 3.5 mA
Flashing	> 2mA, < 3.5 mA
OFF	< 2mA

For the **Analogue Outputs**, the following LED's indicate:

Output	Status
AO1	Power healthy
AO2	Module calibrated
AO3	Communications to the ATUV-1010 (mainboard) is healthy

To ensure the system is healthy, all 3 **Apologue Output** LED's should be illuminated.

Inputs/Outputs

ATUV 1020 Common I/O Module – Analogue Inputs		
ANALOGUE INPUTS (4-20mA)		
	AI1 -	**UVT METER INPUT**
	Used to connect a 4-20mA output from a UVT meter or PLC. In the ENGINEERING MENU SCREEN this input can be enabled and scaled.	
	AI2 -	**FLOW METER INPUT**
	Used to connect a 4-20mA output from a Flow meter or PLC. In the ENGINEERING MENU SCREEN this input can be enabled and scaled.	
	TEMP	**CHAMBER TEMPERATURE INPUT**
	Used to connect a Temperature sensor (PT100) to measure the temperature at the wall of the chamber.	

ATUV 1020 Common I/O Module – Analogue Outputs		
ANALOGUE OUTPUTS (4-20mA)		
	AO1 -	**Selectable Output 1**
	Selectable output – See setup screens	
	AO2 -	**Selectable Output 2**
	Selectable output – See setup screens	
	AO3 -	**Lamp Power Control (Internal Use Only)**
	Used when CONTROL TYPE is set to Thyristor Mode to control the Lamp Power	

ATUV 1020 Common I/O Module – Digital Inputs		
DIGITAL INPUTS – For use with Volt Free Contacts – Signal Voltage 24Vdc		
	DI1 -	**Control Enclosure Temperature Healthy (Internal Use Only)**
	Wired into a temperature switch in the control panel to stop the panel if it is getting too hot	
	DI2 -	**Ground/Earth Fault Healthy (Internal Use Only)**
	Wired into a Ground fault / Earth leakage switch in the control panel	
	DI3 -	**Wiper Healthy (Internal Use Only)**
	Wired into wiper healthy output from the Wiper Module. Closed contact indicates wiper is healthy.	
	DI4 -	**Selectable Digital Input 4**
	Selectable Input – See SETUP MENU SCREEN – COMMS & I/O	
	DI5 -	**Selectable Digital Input 5**
	Selectable Input – See SETUP MENU SCREEN – COMMS & I/O	
	DI6 -	**Start / Stop Input (If fitted)**
	Closed contact indicates a Start signal, (only operates when in Remote)	

	DI7 -	**Half Power Input (If fitted)**
	Close the contact to reduce power when the control mode is set to half / full power. This will only happen once the system is in running mode and the control mode delay timer has expired	
	DI8 -	**Process Interlock Input (If fitted)**
	Closed contact indicates a Process Interlock signal is healthy	
	DI9 -	**Valve Closed Feedback (If fitted)**
	Closed contact indicates valve is closed	
	DI10 -	**Valve Open Feedback (If fitted)**
	Closed contact indicates valve is open	

ATUV 1020 Common I/O Module – Digital Outputs		
DIGITAL OUTPUTS – Volt Free Contacts 250Vac 3Amp max.		
	DO1 -	**NON- CRITICAL ALARM HEALTHY**
	De-energises when a Non-Critical Alarm is detected	
	DO2 -	**CRITICAL ALARM HEALTHY**
	De-energises when a Fatal or Critical Alarm is detected	
	DO3	**System Running**
	Energises when the system is Running	
	DO4 -	**Open Valve**
	Energises when the system enters Running Mode (Refer to Start-up Sequence)	
	DO5 -	**UV Dose Healthy**
	Energises when the UV dose is greater than the Alarm level	
	DO6 -	**Fan Run On Timer (Internal Use Only)**
	Used to enable the fan to run on to ensure cooling when the lamps are running or cooling down. This Output will be on during operation and while the re-strike timer is running.	
	DO7 -	**Selectable Output 1**
	Selectable output – See SETUP MENU SCREEN – COMMS & I/O	
	DO8 -	**Selectable Output 2**
	Selectable output – See SETUP MENU SCREEN – COMMS & I/O	
	DO9	**Selectable Output 3**
	Selectable output – See SETUP MENU SCREEN – COMMS & I/O	
	DO10 -	**Selectable Output 4**
	Selectable output – See SETUP MENU SCREEN – COMMS & I/O	

Connections

Below shows the ATUV-1020 terminal connections:

Terminal	Header 1 Analogue In		Header 2 Analogue Out		Header 3 Digital In		Header 4 Digital In		Header 5 Digital Out		Header 6 Digital Out	
1	N/C		N/C		Panel Temp (Internal Use)		Run/Stop		Non-Critical Alarm Healthy		Fan Run (Internal Use)	
2	UVT	-	N/C									
3		+	Selectable Output	+	Earth Leakage Relay (Internal Use)		Half/Full		Critical Alarm Healthy		Selectable Output 1	
4	N/C			-								
5	Flow	-	N/C		Wiper Healthy (Internal Use)		Process Int.		Running		Selectable Output 2	
6		+	Selectable Output	+								
7	N/C			-	Selectable Digital Input 4		Valve Closed		Open Valve		Selectable Output 3	
8	Chamber Temp (PT100) (Internal Use)	Rd	N/C									
9		Bl	Lamp Control (Internal Use)	+	Selectable Digital Input 5		Valve Opened		UV Dose Healthy		Selectable Output 4	
10		Gr		-								

Lamp Module (ATUV-1031)

The Lamp module is located inside the panel and has various Analogue inputs and Digital outputs.



LEDs

The Digital Input & Output LED lights illuminate when closed and extinguish when open.
For the Analogue Inputs, each LED indicates the following:

Condition	Range
ON	> 3.5 mA
Flashing	> 2mA, < 3.5 mA
OFF	< 2mA

Inputs/Outputs

ATUV 1031 Lamp Module – Analogue Inputs		
ANALOGUE INPUTS (4-20mA Measured)		
	UV - UV Intensity Input	
	Used to connect a 4-20mA output from a UV Intensity probe. In the OPERATOR MENU SCREEN this input can be enabled, and scaled in the ENGINEERING MENU SCREEN.	
	LAMP - Lamp Current Input (Internal Use Only)	
	Used to connect a true RMS instrument (typically a CT) to measure the Lamp Current.	

ATUV 1031 Lamp Module – Digital Input		
DIGITAL INPUT – For use with Volt Free Contacts – Signal Voltage 24Vdc		
	TEMP	**PSU Temperature Input (Internal Use Only)**
	Wired into the PSU thermostat (if fitted). Closed contact indicates temperature is healthy.	

ATUV 1031 Lamp Module – Digital Outputs		
DIGITAL OUTPUTS – Volt Free Contacts 250Vac 1Amp max		
	TEMP	**Temperature Input (Internal Use Only)**
	Wired into the Transformer thermostat (if used). Closed contact indicates temperature is healthy.	
	DO1 -	**Lamp On (Internal Use Only)**
	Energises the Lamp contactor.	
	DO2 -	**Step 1 / 50% (Internal Use Only)**
	Used for systems that have variable control	
	DO3 -	**Step 3 (Internal Use Only)**
	Used for systems that are variably controlled by Step/Binary Step	
	DO4 -	**Lamp On (Internal Use Only)**
	Used for systems that are variably controlled by Step/Binary Step	

Connections

Below shows the ATUV-1031 terminal connections:

Terminal	Header	
1	Common	
2	Relay 4	
3	Relay 3	
4	Relay 2	
5	Relay 1	
6	PSU Temp	
7		
8	UV Intensity	-
9		+
10	N/C	
11	Lamp I	-
12		+

Dipswitch configuration

Located on top of the Lamp Module is a dip switch which is used to assign how many lamps/banks are active in the system. This is set using binary code as shown in the table below.



Each Lamp/Bank Active	1	2	3	4	5	6	Etc
Dip Switch (Binary)	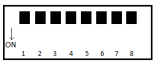	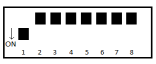	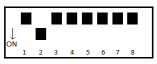	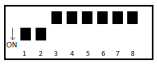	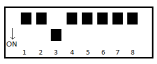	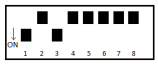	

Note: Dipswitches 6, 7 & 8 are reserved for ATG setup

Start-up Sequence

The following conditions must be achieved for the system to go into Running Mode:

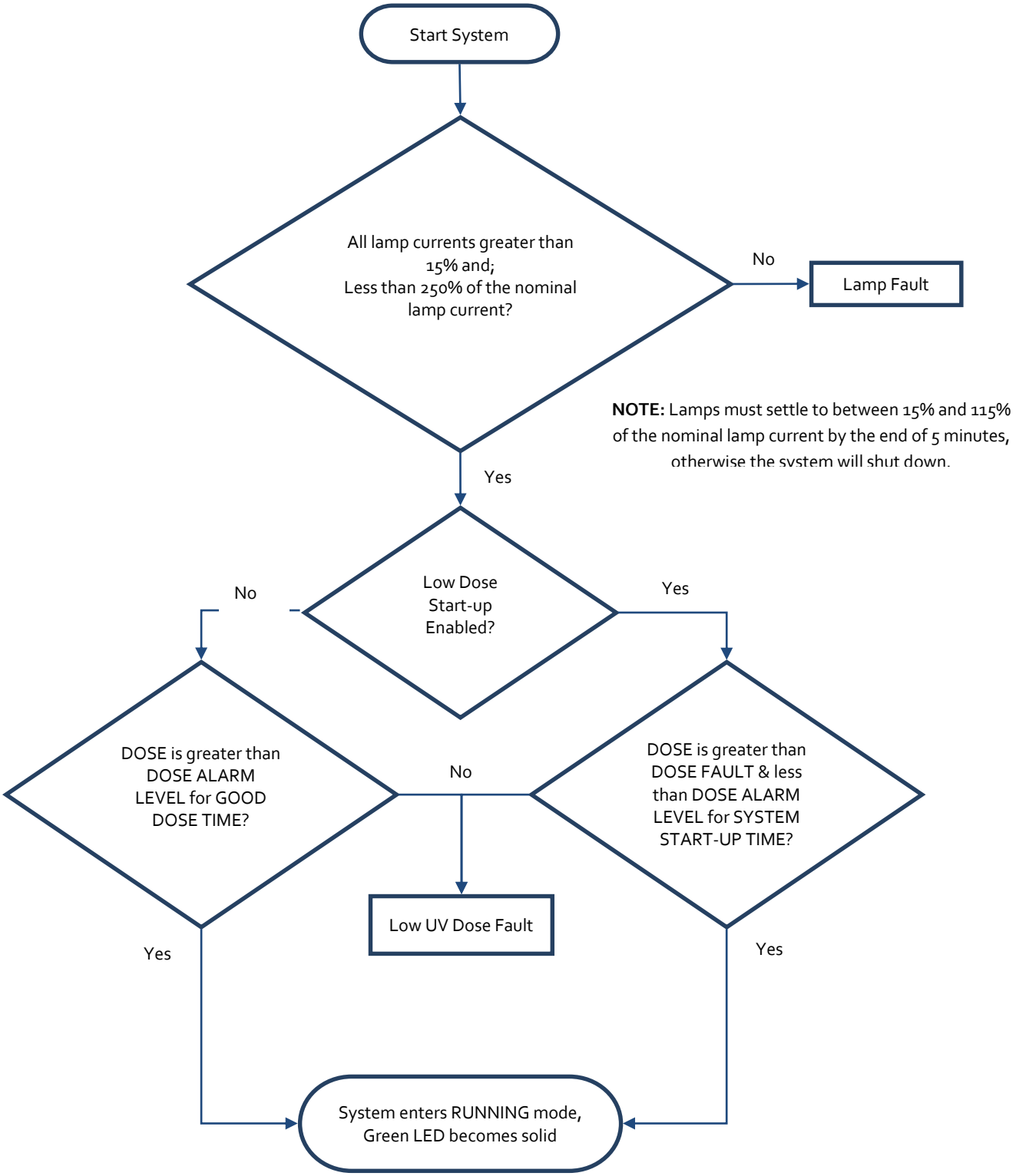

Spectra II Operation

Main Screens

Additional functions of the Spectra II are accessed via the keypad on the Membrane. The keypad has the buttons Up, Down, Enter and Clear which allow the operator to scroll through the screens, enter values and select various control options.

Menu Navigation	
	Use these keys to scroll up and down the menu
	Press this key to enter the Menu or variable
	Pressing this button moves back up one level in the menu structure. When ready to exit the screen, pressing this button will take you back to the Main information screens

Modifying Variables	
	Use these keys to modify / select the relevant variables
	Press this key to accept the changes made to the variable
	Pressing this button returns you to the previous screen without accepting the changes made

The main information screens shown below can be scrolled through using the up and down arrows. These screens provide details about the systems running condition including; lamp current, flow rate and UV Dose.
Pressing Enter on certain screens will give more information, e.g. pressing enter on the lamp current screen will show the individual lamp information (e.g. lamp current, hours and strikes) if more than one lamp is in use, the up and down arrows can be used to view other lamps information.

NOTE: Pressing the Clear button will always move back out of the current menu to the previous screen. Should more than one fault occur, the fault screen with the highest priority will be displayed. Pressing DOWN on the keypad accesses the lower priority screens. Once the cause of the alarm or fault has been rectified, pressing the reset button on the front membrane will reset the alarm.

Navigating the Main Information Screens

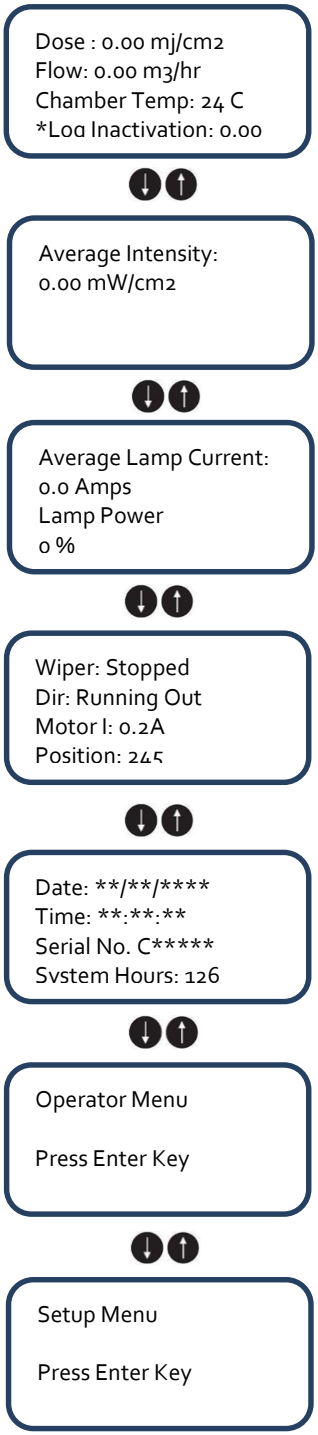

*Log Inactivation only visible if function is enabled

Press ENTER for additional Intensity information

Press ENTER for additional lamp information

Press ENTER for additional Wiper information

Press ENTER to enter the Operator Menu
This menu contains easy access Operator adjustable parameters

Press ENTER to enter the Setup Menu
This Menu contains Operator adjustable parameters

Hold CLEAR to enter the Engineering Menu
This menu contains Engineer adjustable parameters

Fault Screens

The tables below describe the 3 different types of faults that the Spectra II displays:

- Fatal Faults
- Critical Faults
- Non-Critical Alarms

Fault Screen Descriptions		
Fatal Faults - Shuts the system down and will require a manual reset before the system can be restarted		
	Common I/O Watchdog Error	
		Communications to the common IO module has been lost
	Lamp Watchdog Error	
		Communications to a lamp module has been lost
	Ground/Earth Fault	
		Ground/Earth fault in the lamp circuit. Ensure the cables are properly connected and in good condition before attempting to restrike
	Local Stop Fault	
		The unit has been stopped using the local stop button when selected to remote run. Press reset to allow the unit to restart from remote. For safety reasons this alarm is not resettable via the Modbus communications if fitted.
Critical Faults - Shuts the system down and will require a manual reset before the system can be restarted.		
	PSU Temperature Fault	
		PSU (transformer) has exceeded its maximum allowable working temperature
	Control Panel Over Temperature	
		Control Panel has exceeded its maximum allowable working temperature
	Chamber Temperature Fault	
		Chamber Temperature has exceeded FAULT TEMPERATURE set point.
	Lamp Fault	
		Consists of the following: **Lamp Failed to Strike – High/Low Current**: Lamp was unable to strike before 15 secs elapsed **Lamp Failed Warm-up – High/Low Current**: Lamp was unable to strike before 5 mins elapsed **Lamp Failed to go into Running – High/Low Current**: Lamp failed before 5 mins expired **Lamp Failed While Running – High/Low Current**: Lamp Failed while the system was in Running Mode

Fault Screen Descriptions (Cont.)		
	Low UV Dose Fault	
		Actual Dose is less than DOSE FAULT LEVEL for low dose time.
	Process Interlock Shutdown	
		The Process Interlock input has de-energised whilst unit was running. The unit will require a manual reset to re-start.
	Valve Movement Fault	
		The valve has failed to reach the open or closed limit within the specified valve operation time.
	Conductivity Probe Fault	
		Water level has dropped below allowable level
	SD Card Not Inserted	
		SD card is not inserted or corrupt
	Common I/O Not Calibrated	
		ATUV1020 requires calibrating
	Lamp Module Not Calibrated	
		ATUV1031 requires calibrating
	Lamp Modules Less Than Expected	
		Too few lamp modules to support the amount of lamps selected
	Flow Meter Out of Range	
		The flow meter input is outside the 4mA and 20mA tolerances
Non-Critical Alarms – Displays the Fault/Alarm but will allow the system to continue running		
	Process Interlock Interrupt	
		The Process Interlock input has de-energised whilst unit was running. The unit will re-start after the signal is regained and the re-strike period has elapsed.
	Low UV Dose Alarm	
		Actual Dose is less than DOSE ALARM LEVEL for low dose time.
	Wiper Fault	
		Triggered by loss of Unit Healthy output from quartz wiper unit. If ATUV-1040 is fitted, press Enter to review the fault in more detail. Refer to the Automatic Wiping section of the manual.
	Lamp Approaching End of Life	
		Lamp run hours have exceeded lamp life set point and is recommended to be replaced.
	Temperature Alarm	
		Chamber Temperature has exceeded ALARM TEMPERATURE set point.
	Power Loss When Running	
		Power to the system has been lost while the lamp were running

The Spectra II also displays other priority information that the operator may find useful:

OTHER PRIORITY SCREENS		
	Re-Strike Timer Running	
		Indicated the restrike time remaining until the lamps can be re-struck

Operator Menu Screens

This menu screen contains easy access operator adjustable parameters:

Menu	Variable
Operator	Local / Remote / Comms
	Fixed Flow Rate
	Flow Meter Source
	Control Mode
	Calibrate Wiper
	Force Wiper Run
	Wiper Service Position

OPERATOR	>	LOCAL / REMOTE	
Description: Used to select how to start/stop the system either locally or remotely			
Selectable Values	*	Local	System can only Start/Stop by pressing Start on the Spectra
		Remote	System can Start/Stop remotely via a closed hardwired signal into DI6 on ATUV-1020. Can also be stopped via the Spectra for emergency purposes.
		Comms	System can Start/Stop via external comms. Can also be stopped via the Spectra for emergency purposes.

FLOW	>	FIXED FLOW RATE
Description: This value will be used as the flow rate during the start-up period. If no flow meter is set up this value will be used as the constant flow rate.		
Selectable Values	0-9000	m^3/hr
	0-943.5	BPM
	0-57.1	MGD
	0-39624.5	GPM
	0-216	Ml/d
	0-2499.5	l/s

OPERATOR	>	FLOW METER SOURCE	
Description: Used to select what flow meter value is to be used when the system is in running mode. During start-up FLOW RATE will always be used			
Selectable Values	*	STATIC FLOW	Fixed Value
		FLOW METER	Flow Signal via Comms
		COMMS	4-20 mA Flow Meter Input

OPERATOR	>	CONTROL MODE	
Description: Used to select the power control required			
Selectable Values	*	FULL POWER	Force panel to full power
		VARIABLE POWER	Controls Lamps around DOSE SET-POINT
		LOW POWER	Force panel to Low power
		CUSTOM	Engineer use only

OPERATOR	>	CALIBRATE WIPER
Description: Used to initiate the Wiper calibration process.		
Selectable Values	*	No
		Yes

OPERATOR	>	FORCE WIPER RUN
Description: Used to force the wiper to perform a full sweep.		
Selectable Values	*	No
		Yes

OPERATOR	>	WIPER SERVICE POSITION
Description: Used to park the wiper carriage 30% the length of the chamber to assist with quartz extraction during maintenance. **Note:** When performing this function, the Wiper will lose its calibration memory, therefore will require re-calibrating when maintenance is complete.		
Selectable Values	*	No
		Yes

Setup Menu Screens – Operator Menus

The Setup Menu Screens allow the operator to alter the way the system will run by changing the system variables

Warning – Altering variables can stop the system working correctly: only suitably qualified persons should alter any of the system variables

- To enter the setup menu screen as an operator, press enter on the set-up screen
- Enter the **A T G** Password using the up and down arrows and the enter key
- Pressing clear at any point will return you back you to the main screens

MENU	VARIABLE	MENU	VARIABLE
FLOW	Fixed Flow Rate	COMMS and I/O	Analogue Output 1
	Flow Units		Analogue Output 1 Max
	Flow Meter Source		Analogue Output 2
	Flow Meter Max		Analogue Output 2 Max
LAMP	Lamp Current		Selectable Digital Input 4 & 5
	Restrike Time		Digital Output 1, 2, 3 & 4
	Lamps In Use		Conductivity Delay
	Reset Individual Lamp hours		Conductivity Probe
	Reset All Lamp Hours		Modbus Slave Address
DOSE	Dose Units		DHCP
	Dose Set-Point		IP Settings
	Dose Alarm		DNS
	Dose Fault	VALVES FEEDBACK and PROCESS INTERLOCK	Valve Feedback
	Good Dose Time		Valve Time
	Low Dose Time		Process Interlock
	Low Dose End Time		Process Interlock Action
	Low Dose Start-up		Process Interlock Seconds
	UV Sensors In Use	Wiper	Wiper Type
	Intensity Units		Wipers In Use
	UV Sensor Max		Wiper Run Interval
	Low Power Sw. Mode		Wiper Low Dose Time
	Low Power Timing		Wipe on Low Dose
	Low Power S-P	UVT	UVT Meter Source
TEMPERATURE	Temperature Units		Static UVT
	Temperature Fault Level		UVT Meter Max
	Temperature Alarm Level	MISC.	Auto Restart
	Temperature Alarm DB		Change Password?
			Time
			Date
			Reset Defaults

Navigating the Setup Screen

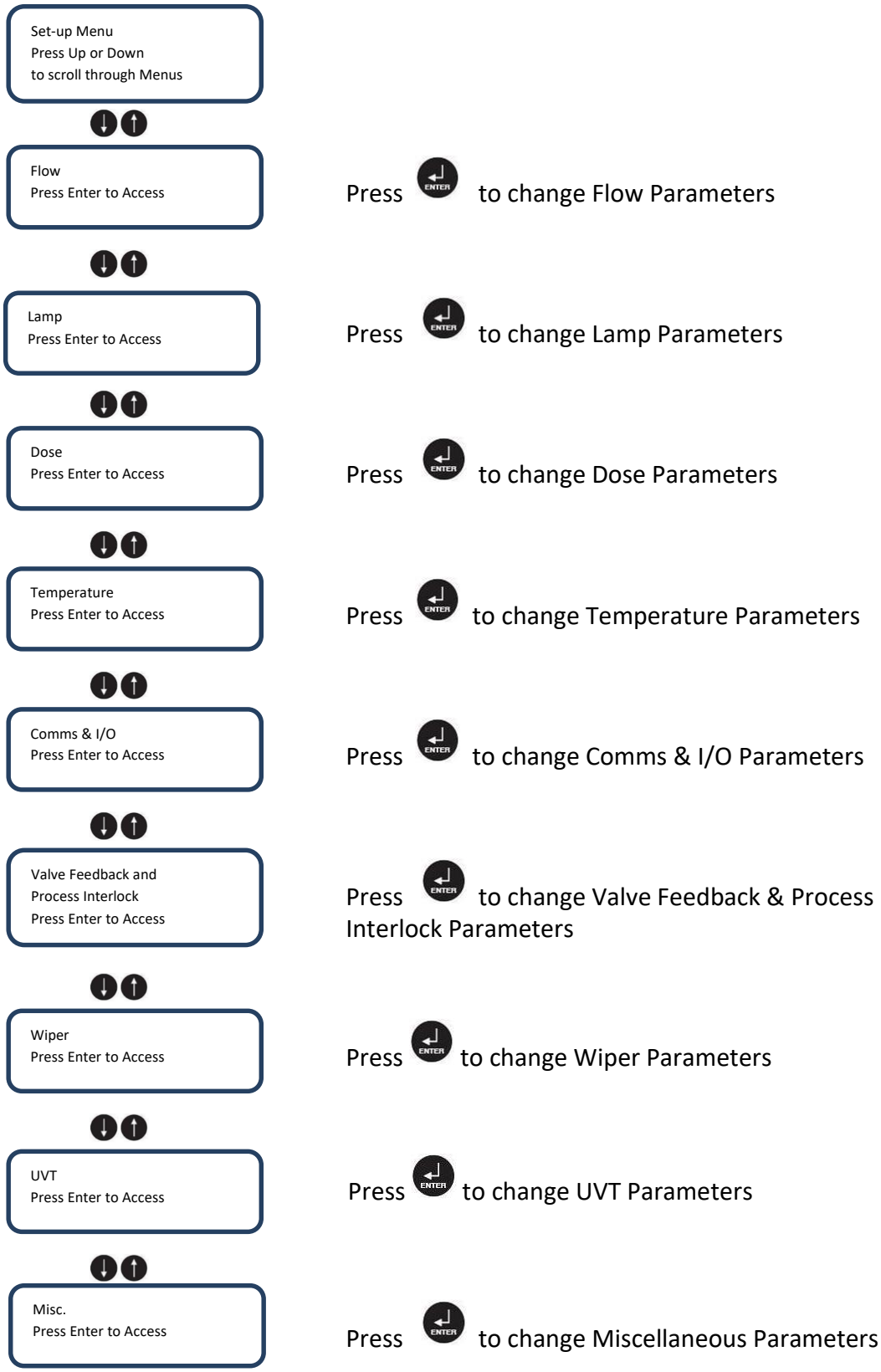

Setup Menu - Parameter Descriptions

Flow

FLOW	>	FLOW UNITS	
Description: Used to select which flow units are required.			
Selectable Values	*	m^3/hr	Cubic metres per hour
		BPM	Barrels per minute
		MGD	Million gallons (US) per day
		GPM	Gallons (US) per day
		Ml/d	Million litres per day
		l/s	Litres per second

FLOW	>	FLOW METER SOURCE	
Description: Is used to select what flow meter value is to be used when the system is in running mode. During start-up FLOW RATE will always be used.			
Selectable Values	*	STATIC FLOW	Fixed Value
		COMMS	Flow Signal via Comms
		FLOW METER	4-20mA Flow Meter Input

FLOW	>	FLOW METER MAX	
Description: Used to convert flow meter input (in mA) to the actual flow rate. The flow meter reading at 20 mA should be entered.			
Selectable Values	*	0-9000	m^3/hr
		0-943.5	BPM
		0-56.9	MGD
		0-39624.5	GPM
		0-216	Ml/d
		0-2499.5	l/s

Lamp

LAMP	>	LAMP CURRENT
Description: Used to set the nominal current for the lamp(s). In Start-up Mode: measured lamp current must be within the LAMP MIN CURRENT STARTUP and the LAMP MAX CURRENT STARTUP of Nominal In Running Mode: measured lamp current must be within the LAMP MIN CURRENT RUNNING and the LAMP MAX CURRENT RUNNING of Nominal		
Selectable Values	0.0 – 30.0	Amps

LAMP	>	RESTRIKE TIME
Description: Used to set the time required for the lamp to cool sufficiently to allow re-strike. (This value is usually set to 6 or 8mins depending on lamp type)		
Selectable Values	0 – 60	Minutes

LAMP	>	LAMPS/BANKS IN USE
Description: Used to select which lamps should be used.		
LMP = 1234 USE =YYYY	Use the up and down arrows to select Y to use the lamp and N to disable it. Press enter to move to the next lamp and confirm the selections.	

LAMP	>	RESET INDIVIDUAL LAMP HOURS	>	RESET LAMP # HRS
Description: Is used to reset individual lamp life hours and strikes upon replacing a specific lamp. Use the up and down arrows to scroll through the different lamps and press enter to select Yes to reset the hours for that particular lamp.				
Selectable Values	Yes			
	No			

LAMP	>	RESET ALL LAMP HOURS
Description: Is used to reset lamp life hours and strikes for all lamps. Press Enter to select Yes to Reset ALL lamp hour counters.		
Selectable Values	Yes	
	No	

Dose

DOSE	>	DOSE UNITS	
Description: Working DOSE units can be selected.			
Selectable Values	*	mJ/cm^2	
		J/m^2	
		J/cm^2	

DOSE	>	DOSE SET-POINT	
Description: Used to set the target Dose. (Used for control mode)			
Selectable Values	0 – 5,000		mJ/cm^2
	0 – 50,000		J/m^2
	0.00 – 5.00		J/cm^2

DOSE	>	DOSE ALARM LEVEL	
Description: When the actual dose drops below the alarm value for LOW DOSE TIME, the unit will display a non-critical alarm and will continue to run.			
Selectable Values	1 – 5,000		mJ/cm^2
	1 – 50,000		J/m^2
	0.01 – 5.00		J/cm^2

DOSE	>	DOSE FAULT LEVEL	
Description: When the actual dose drops below the fault value for LOW DOSE TIME, the unit will display a critical alarm and will shut down. DOSE FAULT LEVEL must be less than DOSE ALARM LEVEL			
Selectable Values	0 – 5,000		mJ/cm^2
	0 – 50,000		J/m^2
	0.00 – 5.00		J/cm^2

DOSE	>	GOOD DOSE TIME	
Description: The dose must be greater ALARM LEVEL for the GOOD DOSE TIME in order for the system to switch into Running mode. (This value is usually set to 15)			
Selectable Values	0 – 120		Seconds

DOSE	>	LOW DOSE TIME	
Description: This variable sets the length of time the dose can drop below the Alarm or Fault values before activating the Alarm or Fault. (This value is usually set to 30)			
Selectable Values		0 – 60	Seconds

DOSE	>	LOW DOSE END TIME	
Description: Sets the length of time a good dose must be seen in order to end the low dose timer and set the system back to normal running conditions.			
Selectable Values	*	10-15	Seconds

DOSE	>	LOW DOSE STARTUP	
Description: Used to define whether the system will go into running mode if the measured dose is greater than FAULT LEVEL but less than ALARM LEVEL. If enabled the unit will go into running mode once FAULT LEVEL has been exceeded for 5 mins, but the Low dose alarm activate if ALARM LEVEL is not reached. (This value is usually set to Disabled)			
Selectable Values	*	Disabled	
		Enabled	

DOSE	>	SENSORS IN USE
Description: Used to select which sensors should be used.		
SNSR = 1234 USE =YYYY		Use the up and down arrows to select Y to use the sensor and N to disable it. Press enter to move to the next sensor and confirm the selections.

DOSE	>	INTENSITY UNITS	
Description: Working INTENSITY units can be selected.			
Selectable Values	*	mW/cm²	
		W/m²	

DOSE	>	UV SENSOR MAX	
Description: Used to convert UV sensor input to the actual UV intensity. The UV reading at 20 mA should be entered.			
Selectable Values	0 – 1,000		mW/cm^2
	0 – 10,000		W/m^2

DOSE	>	LOW POWER SWITCH	
Description: Used to define how the system switches into one of two low power mode when the external Low Power signal (DI7) has been energised on the ATUV1020. The system will enter into low power mode (control delay time expired) and then scale various variables according to the LOW POWER S-P. The original value is multiplied by the LOW POWER S-P (%) to attain the new value.			
Selectable Values	*	DISABLED	External Low Power switch is turned off.
		DOSE REDUCTION MODE	Used when less treatment is required. The DOSE SET POINT, ALARM and FAULT are all reduced to a defined percentage (this is set in LOW POWER S-P).
		FLOW REDUCTION MODE	Used when the flow rate through the system is reduced and the same level of treatment is required. The flow will reduce from the FLOW RATE to a defined percentage of the FLOW RATE (which is set in LOW POWER S-P). If a flow-meter is being used, the measured flow rate is reduced to a defined percentage (which is set in LOW POWER S-P).

DOSE	>	LOW POWER TIMING

Description:
Used to define when the system will switch into low power mode (if LOW POWER TIMING is Enabled). The system will reduce the target DOSE SET-POINT to a pre-determined level at the set times. The LOW POWER SET-POINT variable is used to set the reduction level, this automatically adjusts the DOSE SET-POINT, alarm and fault level to a percentage of the nominal value during low power mode.

	Two low power timings per day can be set starting with the earliest time. To copy and set the same low power timings throughout the week, the timings will need to be set on the Sunday Low/Full Power timings first, then copied using the COPY LOW POWER 1/2 option. Please see below for examples.	
	To run at low power from 6.30am to 10pm (Monday)	Monday Low Power 1 06.30.00 Monday Full Power 1 22.00.00
	To run at low power from 4.30am to 10am and 2pm to 8.45pm (Thursday)	Thursday Low Power 1 04.30.00 Thursday Full Power 1 10.00.00 Thursday Low Power 2 14.00.00 Thursday Full Power 2 20.45.00
	To run at low power from 8.00pm (Monday) to 10am (Tuesday)	Monday Low Power 1 20.00.00 Monday Full Power 1 00.00.00 Tuesday Low Power 1 00.00.00 Tuesday Full Power 1 10.00.00

DOSE	>	LOW POWER S-P

Description:
In “Dose Reduction Mode” this variable is used to reduce the DOSE SET POINT, ALARM and FAULT levels when the system is running in low power mode.
(e.g. Original DOSE SET POINT = 100, LOW POWER S-P = 20%, Ne-w DOSE SET POINT = 20)

In “Flow Reduction Mode” this variable is used to scale the flow rate when the system is running in low power mode. The original value is multiplied by the LOW POWER S-P to attain the new value
(e.g. Original FIXED FLOW RATE = 120, LOW POWER S-P = 40%, New FIXED FLOW RATE = 48).
If LOW POWER S-P is set to 0%, the FLOW RATE value will reduce to 0.01 (units), causing the DOSE to rise dramatically.

Selectable Values	0-99	%

Temperature

TEMPERATURE	>	TEMP UNITS	
Description: Displayed temperature units can be selected.			
Selectable Values		Degrees Celsius	°C
		Degrees Fahrenheit	°F

TEMPERATURE	>	FAULT TEMP	
Description: Temperature at which a critical alarm is generated This value is usually set to 46°C - If this value is set too high it could lead to damaged equipment or injury!			
Selectable Values		0 -120	°C
		32 - 248	°F

TEMPERATURE	>	ALARM TEMP	
Description: Temperature at which a non-critical alarm is generated. If DO7, 8, 9 or 10 is set to TEMP ALARM, the output will energise when this temperature is reached.			
Selectable Values		0 -120	°C
		32 – 248	°F

TEMPERATURE	>	TEMP ALARM DB	
Description: Temperature reduction required below alarm temperature level before temperature output re-opens			
Selectable Values		0 -120	°C
		32 – 248	°F

Comms & I/O

COMMS.	>	ANALOGUE OUTPUT 1	
Description: Used to select the required 4-20mA analogue output from AO-1.			
Selectable Values	*	NONE	
		INTENSITY	0 - 100% of Average Intensity from UV Sensor
		DOSE	0 - 100% of ANALOGUE OUTPUT 1 MAX

COMMS	>	ANALOGUE OUTPUT 1 MAX	
Description: The value selected equates to 20mA output			
Selectable Values	0 - 5000		

COMMS.	>	ANALOGUE OUTPUT 2	
Description: Used to select the required 4-20mA analogue output from AO-2.			
Selectable Values	*	NONE	
		INTENSITY	0 - 100% of Average Intensity from UV Sensor
		DOSE	0 - 100% of ANALOGUE OUTPUT 2 MAX

COMMS.	>	ANALOGUE OUTPUT 2 MAX	
Description: The value selected equates to 20mA output.			
Selectable Values	0 - 5000		

COMMS	>	SELECTABLE DIGITAL INPUT 4 & 5	
Description: Used to select the digital input function on DI4 & DI5			
Selectable Values	*	BOOST	Used to force the lamps to 100% power when the Digital input is energised on the ATUV1020.
		CONDUCTIVITY	Used to set whether a conductivity probe is being used to ensure the chamber is full. If enabled the SPECTRA must see the Conductivity signal before the system will start. If this signal is still lost after the CONDUCTIVITY DELAY time elapses (pre-set to 15 seconds), a Critical Fault will be generated and the system will stop running.
		RESET	Used to Reset any faults that have been rectified

COMMS	>	DIGITAL OUTPUT 1, 2, 3 or 4	
Description: Used to select the digital output function on OP7, 8, 9 or 10			
Selectable Values	*	TEMP ALARM	Closes when the Temperature Alarm Level is reached
		REMOTE	Closes when the system is set to run in Remote mode
		DOSE HLTH	Closes when the dose is above the Alarm Level
		SYS RUN	Closes when the system is running
		SYSTEM READY	Closes when the following conditions exist: NO critical faults exist and the re-strike timer is NOT running
		SYSTEM READY REMOTE	Closes when the following conditions exist: NO critical faults exist, the re-strike timer is NOT running and Remote IS selected.
		BREAK GLASS	Energises when the ELR (DI2) signal is healthy and de-energises when earth leakage has been detected
		LAMP FAILURE	Energises when a Lamp Fault has been generated
		LOW DOSE	Closes when the dose is above the Alarm Level

COMMS	>	CONDUCIVITY DELAY	
Description: Sets the time allowed before a conductivity fault is generated after losing the signal.			
Selectable Values	0-120		Seconds

COMMS	>	MODBUS SLAVE ADDRESS	
Description: Address used for external communications via Modbus (This value is usually set to “1”)			
Selectable Values	1-99		

COMMS	>	DHCP ENABLED	
Description: This is used to setup the internet connectivity: If enabled Dynamic Host Client Protocol is active and the network controller will assign the system an IP address. (This value is usually set to " Enabled")			
Selectable Values	*	Enabled	
		Disabled	

COMMS	>	IP SETTINGS	
Description: This is used to display the internet connectivity settings.			
Selectable Values	IP Address		xxx:xxx:xxx:xxx
	Subnet Mask		xxx:xxx:xxx:xxx
	Default Gateway		xxx:xxx:xxx:xxx

COMMS	>	DNS	
Description: This is used to setup the internet connectivity: If set to 0 then the Gateway DNS Server will be used, this is the normal setting.			
Selectable Values	xxx:xxx:xxx:xxx		

Valves & Process Interlock

VALVES & PROCESS INTERLOCK	>	VALVE FEEDBACK	
Description: Set whether the opened/closed feedback from the valve is enabled. If enabled the SPECTRA must see the VALVE CLOSED signal before the system will start. Once OPEN VALVE output (DO4) is energised the SPECTRA must see the VALVE OPEN signal within VALVE OPERATION TIME otherwise a Critical Fault is generated and the system will shut down (This value is usually set to DISABLED)			
Selectable Values	*	DISABLED	
		ENABLED	

VALVES & PROCESS INTERLOCK	>	VALVE OPERATION TIME	
Description: Set the time allowed for actuation of the valve before a critical alarm is generated.			
Selectable Values	1 – 180		Seconds

VALVES & PROCESS INTERLOCK	>	PROCESS INTERLOCK MODE	
Description: Set whether process interlock function is activated. If activated the system will respond to the process interlock input.			
Selectable Values	*	DISABLED	No Action
		RUNNING	Process interlock feedback will only be required when the system has entered into running mode
		FULL	System must see interlock feedback before starting

VALVES & PROCESS INTERLOCK	>	PROCESS INTERLOCK ACTION	
Description: Defines the action to be taken if the process interlock signal is removed.			
Selectable Values	*	INTERRUPT	This will temporary stop the system until the signal is regained (Note: The re-strike timer must also have expired in order for the system to restart)
		SHUT-DOWN	This will stop the system until the signal is regained and is manually restarted using the SPECTRA control interface.

VALVES & PROCESS INTERLOCK	>	PROCESS INTERLOCK TIME	
Description: Set the time the PROCESS INTERLOCK input (DI8) must be broken before the interlock action is generated			
Selectable Values	0 – 180		Seconds

Wiper

WIPER	>	WIPER TYPE	
Description: Used to select which wiper system is being used			
Selectable Values	None		No Wiper is being used
	Wiper I		AT-630 Wiper Module is being used
	Wiper II		ATUV-1040 Wiper Module is being used

WIPER	>	WIPER RUN INTERVAL	
Description: Used to define the length of time between each Wiper sweep			
Selectable Values	###.#		Hours

WIPER	>	WIPER LOW DOSE TIME	
Description: Used to extend the Low Dose Time parameter for when the wiper is running.			
Selectable Values	###		Seconds

WIPER	>	WIPE ON LOW DOSE	
Description: Used to select whether a Wipe is initiated upon a Low Dose Alarm			
Selectable Values	*	Disabled	Wiper will not sweep upon Low Dose Alarm
		Enabled	Wiper will sweep upon Low Dose Alarm

UVT

UVT	>	UVT METER SOURCE
Description: Used to select which UVT valve is used from which source.		
Selectable Values	Disabled	
	Comms	UVT valve via Comms
	Analogue	4-20mA meter input via AI1
	Static	Fixed valve

UVT	>	STATIC UVT
Description: Used to select the static UVT valve.		
Selectable Values	0-100	%

UVT	>	UVT METER MAX
Description: Used to convert the UVT meter input (in mA) to the actual UVT. The UVT meter reading at 20mA should be entered.		
Selectable Values	0-100	%

Miscellaneous

MISC.	>	AUTO RESTART	
Description: Defines whether the system will attempt to restart after a power failure when the lamp/s were running. If a power failure does occur while the system was running, it will generate a POWER LOSS WHEN RUNNING alarm. (This value is usually set to DISABLED)			
Selectable Values	*	DISABLED	
		ENABLED	

MISC.	>	CHANGE PASSWORD?
Description: Change the operator user password. (This value is usually set to “atg”		
A-Z	Use the up and down arrows to select the required letter, press enter to accept and move on to the next letter.	

MISC.	>	SET TIME
Description: Used to set the real time clock. If the Online Data logging feature is being used, the time will automatically sync to the server clock. Note: This can only be set when the restrike timer is not running		
TIME=24:00:00	Use the up and down arrows to select the required number, press enter to accept and move on to the next character. The clock is a 24 hour clock and can be altered depending on time zone.	

MISC.	>	SET DATE
Description: Used to set the Time and Date and can be altered depending on the time zone. If the Online Data logging feature is being used, the time will automatically sync to the server date. Note: This can only be set when the restrike timer is not running		
DATE=30/12/2015	Use the up and down arrows to select the required number, press enter to accept and move on to the next character. The date is of the format: DD/MM/YYYY	

MISC.	>	RE-SET DEFAULTS?
Description: Resets the system to the factory defaults.		
Selectable Values	*	NO
		YES

Set-up Menu Screens – Engineering Menus

The Engineer Menu screens allow the engineer to alter the Spectra II calibration and system set-up parameters.
Warning: Altering the calibration / variables can be dangerous and cause irreversible damage. Only suitably qualified persons should enter this menu.

- To enter the setup menu screen as an Engineer, hold clear on the Set-up Menu Screen
- Enter the Password using the up and down arrows and the enter key
- Pressing clear at any point will return you back you to the main screen

MENU	SUB-MENU	VARIABLE
Advanced Setup	Lamp	Lamp Strike Time
		Lamp Warmup Time
		Lamp Start Mode
	Dose	Dose Strategy
		KA
		KB
		KC
		KD
		KE
		KF
		UVS
		V-Factor
		System Start-up Time
	Power Control	Control Delay Time
		Control Type
		Boost mode
	Comms and I/O	Data Logging
		Log Interval
	Misc.	Temperature Sensor
		Change Password
		Create Defaults
Calibration	Used to calibrate Spectra II Components (Engineers Use Only)	
Debug Menu	Used to monitor Spectra II Software (Engineers Use Only)	

Navigating the Engineering Menu

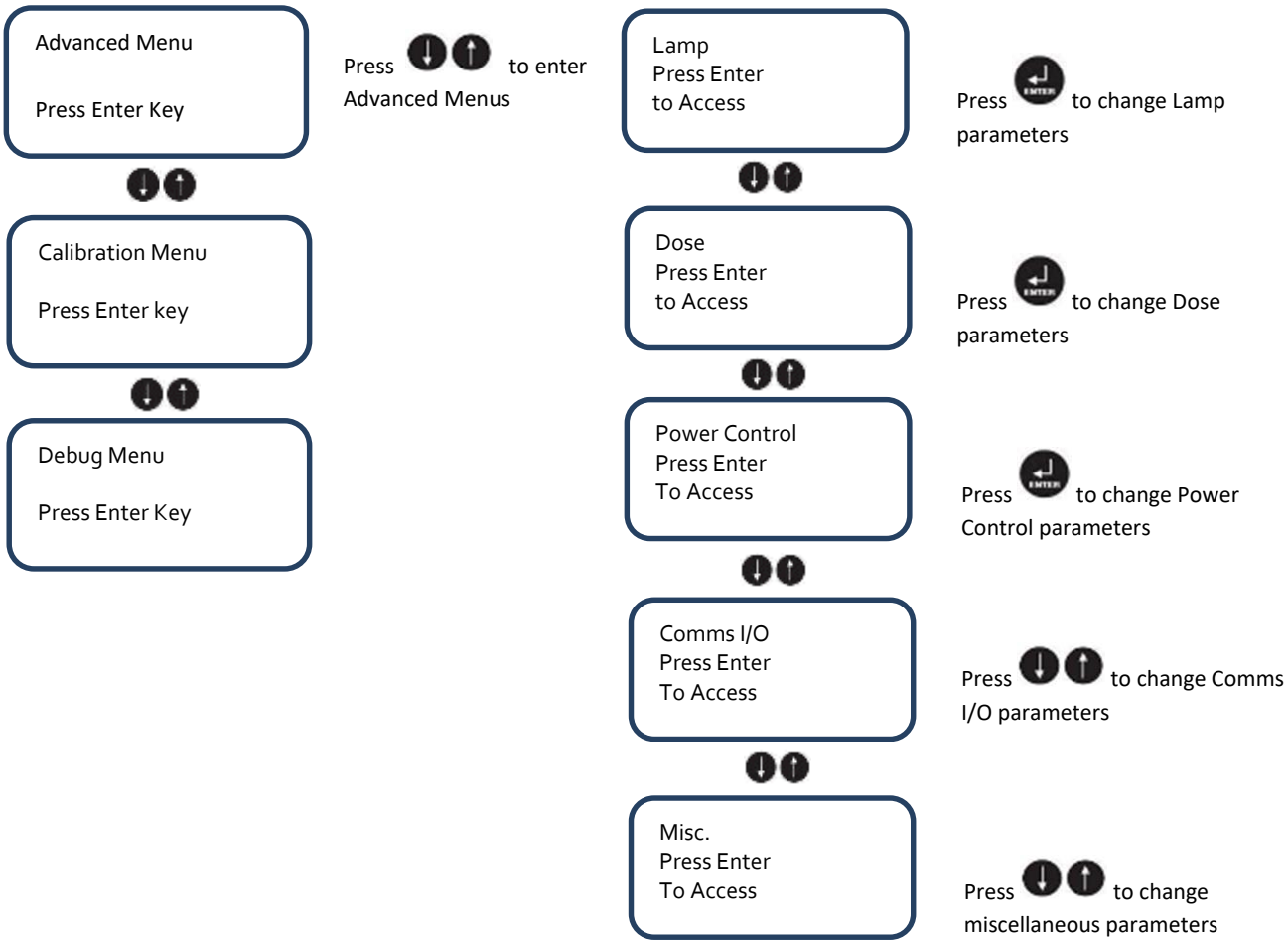

Engineering Menu - Parameter Descriptions

Lamp

LAMP	>	LAMP STIKE TIME	
Description: Used to define the length of time the software will wait to see a lamp current before generating a lamp fault. This also sets the time in-between each lamp striking for multi-lamp systems. Normal Setting = 15 seconds			
Selectable Values	0 - 10		Seconds

LAMP	>	LAMP WARMUP TIME	
Description: Used to define the length of time the software will wait to see the lamp currents settle between the LAMP MAX CURRENT RUNNING and LAMP MIN CURRENT RUNNING before generating a lamp fault. Normal Setting = 5 minutes			
Selectable Values	0 - 120		Minutes

LAMP	>	LAMP START MODE	
Description: Used to select in how the lamps should be started. (This value is usually set to Sequenced)			
Selectable Values	Sequenced		Lamps start one at a time using the lamp strike time as an interval
	Instant		Lamps all start at once.

Dose

DOSE	>	KA
Description: Dose Calculation Variable. (Should not be altered from factory set values)		
Selectable Values	-10.0000 – 10.0000	

DOSE	>	KB
Description: Dose Calculation Variable. (Should not be altered from factory set values)		
Selectable Values	-10.0000 – 10.0000	

DOSE	>	KC
Description: Dose Calculation Variable. (Should not be altered from factory set values)		
Selectable Values	-10.0000 – 10.0000	

DOSE	>	KD
Description: Dose Calculation Variable. (Should not be altered from factory set values)		
Selectable Values	-10.0000 – 10.0000	

DOSE	>	KE
Description: Dose Calculation Variable. (Should not be altered from factory set values)		
Selectable Values	-10.0000 – 10.0000	

DOSE	>	KF
Description: Dose Calculation Variable. (Should not be altered from factory set values)		
Selectable Values	-10.0000 – 10.0000	

DOSE	>	UVS
Description: Dose Calculation Variable. (Should not be altered from factory set values)		
Selectable Values	0.0000 – 40.0000	

DOSE	>	V-FACTOR
Description: Dose Calculation Variable. (Should not be altered from factory set values)		
Selectable Values	0.00 – 5.00	

DOSE	>	SYSTEM STARTUP TIME
Description: Used to define the length of time the Dose is able to reach the DOSE ALARM LEVEL before entering Running Mode without creating a Low Dose Fault (if LOW DOSE STARTUP is Disabled). If LOW DOSE STARTUP is Enabled the unit will enter Running mode once the DOSE FAULT LEVEL has been exceeded for SYSTEM STARTUP TIME, if the DOSE ALARM LEVEL is not reached.		
Selectable Values	1 - 1000	minutes

Power Control

POWER CONTROL	>	CONTROL DELAY TIME
Description: Used to define the length of time the software will wait to vary the power once the system has gone into running mode. Normal Setting = 5 minutes		
Selectable Values	0 - 120	Minutes

POWER CONTROL	>	CONTROL TYPE
Description: Used to select the control method for variable systems.(When Available)		
Selectable Values	None	No intelligent control (Full power only)
	Thyristor	Controls Lamps around DOSE SET-POINT using 4-20mA output from AO3 on the ATUV1020 Max control current (20mA) = 100% Min control current (4mA) = 50%
	Binary Step	Controls Lamps around DOSE SET-POINT using binary coding of outputs to switch power. Normally this is used as 7 Step control (3 contactors) per lamp/bank All contactors energize when the lamp strikes.
	Step	Controls Lamps around DOSE SET-POINT using basic coding of outputs to switch power levels. Normally this is used as 4 Step control (4 contactors) per lamp/bank All contactors energize when the lamp strikes.
	Nedap	Uses high frequency electronic ballasts to start and drive lamps by controlling the power to the lamp with its own dimming capabilities.

POWER CONTROL	>	BOOST MODE
Description: Used to force the lamps to 100% power when the BOOST input (DI4) is energised on the ATUV1020.		
Selectable Values	*	Disabled
		Enabled

Comms & I/O

COMMS & I/O	>	DATA LOGGING
Description: Set whether data logging is enabled. If enabled, routine events will log into the log file on the SD card and to the Remote Data Logger facility (if connected). Once the register is full on the SD card it starts overwriting data from the start of the register.		
Selectable Values		Disabled
	*	Enabled

COMMS & I/O	>	LOG INTERVAL
Description: Time between routine log events.		
Selectable Values	1 - 3600	Seconds

Miscellaneous

MISC	>	TEMPERATURE SENSORS
Description: Number of temperature sensors installed on the system. !For medium pressure UV Systems this value must NOT be set to 0!		
Selectable Values	0 - 32	

MISC	>	CHANGE PASSWORD
Description: Change the Operator User password. (This value is usually set to “atg”)		
A-Z	Use the up and down arrows to select the required letter, press enter to accept and move on to the next letter.	

MISC.	>	CREATE DEFAULTS?
Description: Used to store the default settings.		
Selectable Values	*	NO
		YES

Integration

This section details how the Spectra II control system can be integrated with other equipment on site to provide flexible and reliable operation. For all connections coming in or out of the panel from any equipment, a 'customer terminal block' will be included (prior to which Analogue/Digital signals have been selected) located at the bottom of the panel.

Analogue Inputs

Spectra II has two external analogue inputs which operate on a 4-20mA input signal.

UV Transmissivity (UVT)

This option is available if there is a Transmittance meter being used. The UV Transmissivity determines how well the UVC light will penetrate the water being treated. The higher the UVT, the more effective the UVC is for the deactivation of pathogens. By connecting a 4-20mA UVT input, the Spectra II is able to display the UVT of the water being treated that is being passed through the chamber. This signal will need to be connected into AI1 on the ATUV1020.
Note: This reading is for information only and has no impact on the operation of the system

Flow Meter

Flow plays a vital role in determining the UV Dose. If the water being treated passing through the chamber varies in flow, the calculated UV Dose will also be affected. By connecting a 4-20mA flow meter, the Spectra is able to determine a more accurate UV dose reading. This passive input will need to be connected into AI2 on the ATUV1020, the **FLOW METER SOURCE** set to Analogue and the **FLOW METER MAX** inputted on the Spectra II.

Analogue Outputs

Spectra II has two selectable active analogue outputs (**DOSE & INTENSITY**) which operate on a 4-20mA output signal. These analogue signals are outputted from both AO1 and AO2 on the on the ATUV1020 and requires scaling by setting a maximum value at 20mA which is done using the **ANALOGUE OUTOUT MAX** variable. If these outputs are selected, they will replicate the Spectra II figures in a 4-20mA signal.

Valves

DO4 on the ATUV1020 signals the opening and closing of a valve if being used in conjunction with the UV system. When the system enters into **RUNNING** mode, this output will energise causing the valve to open (operated by motor, air actuated, etc.), in turn causing the valve to close when the signal has been lost.
By activating the **VALVE FEEDBACK**, feedback signals from the valve/s will have to be provided to ensure the valve have opened or closed within the **VALVE OPERATION TIME**. If the valve does not open/close within this time, a Critical Fault will occur on the Spectra II (Valve Movement – Valve failed to Open/Close) stopping the system. These connections are wired into DI9 (Valve Closed) and DI10 (Valve Opened) on the ATUV1020.

Bleed On Relay

A bleed on relay can be used in conjunction with one of the Spectra II selectable digital output functions.
If the **SELECTABLE DIGITAL OUTPUT** is set to **TEMPERATURE ALARM** (DO7 – DO10) on the ATUV1020, and the chamber temperature exceeds its Alarm Set-point value, it will cause the Digital Output to energise. If connected, this will be able to signal a bleed valve to open, either allowing air trapped in the chamber to escape or to allow flow to pass through the chamber, consequently reducing the temperature without reaching the shutdown temperature (**FAULT TEMP**). This Digital Output will de-energise when the chamber temperature falls below **a value of 5 (units)**, thus closing the bleed valve.

External Low Power Switching

The Low Power Switching primary function is to force the system into low power (50% lamp power output), consequently affecting the dose.

Dose Reduction

To avoid the system tripping on Low UV Dose, the **LOW POWER S-P** variable is used to scale the Dose Alarm and Fault levels accordingly if **DOSE REDUCTION MODE** has been selected.

Flow Reduction

The function of the **FLOW REDUCTION MODE** is to reduce the flow rate accordingly, again using the **LOW POWER S-P** variable. This is particularly useful if a Flow meter is not being used and there is a fixed reduction in flow (e.g. pump turning off). The system will scale down the **FLOW RATE** so that it is equivalent to the new reduced flow rate.
If the **LOW POWER S-P** has been set to 0% whilst in **FLOW REDUCTION MODE**, the flow rate will reduce to 0.01 to purposely increase the Dose to reduce the chances of Low Dose Alarms/Faults from occurring. These functions are also useful if filters are used and a backwash/bump cycle is being carried out in a process, or there is reduced/no flow and the system is to remain running. By forcing the system to the lowest power, the chances of the system tripping on High Temperature will reduce.

Boost

The Boost function is used to force the system to full power (100% lamp power output) and can be used in conjunction with chlorine controllers. If combined Chloramines are high (if present), and the chlorine controller alarm is triggered, this will activate the Boost function. By increasing the lamp output, an increase in intensity will result that will help to break down the bonds. This is an external digital input signal and wired into DI5 on the ATUV1020.
Note: If both Boost and External Low Power Switch are energised, Low Power will always take priority.

Remote Start / Stop

DI6 on the ATUV1020 enables the remote Start / Stop action. It has an opto-isolated input which allows remote volt-free contacts to mimic the action of the normal front panel **START** and **STOP** pushbuttons. If the system is set to remote and the volt free contact is closed the UV system will be permitted to run and continue to run if the signal is still present. If the external signal is removed the UV lamp will be stopped (if running). The system cannot be started using the membrane whilst in remote but can be stopped. By stopping the system locally whilst in remote will cause a critical fault (Local Stop Fault) which will need to be locally reset.

Process Interlock

The Process Interlock opto-isolated input enables an external device (switch, pump, etc.), to stop the running of the UV lamp/s. The Process Interlock requires a volt free contact from any device and is wired into DI8 on the ATUV1020. If the volt free contact is closed the UV system will be permitted to run.

Process Interlock Action

The Process Interlock Action describes **HOW** the system wants to respond when the signal has been lost:

- If Process Interlock is set to Interrupt and the external signal is lost, the UV lamp will be stopped (if running) causing a Non-Critical Alarm to appear on the spectra (Process Interlock Interrupt) and not allowed to start again until the PI signal is regained and the restrike time has elapsed **Note:** if Remote is enabled, the remote signal will also have to be present for the system to re-start
- If Process Interlock is set to Shutdown and the external signal is lost, the UV lamp will be stopped (if running) causing a Critical Fault (Process Interlock Shutdown) to appear on the Spectra and not allowed to start again until the Critical Fault has been reset locally.

Process Interlock Mode

The Process Interlock Mode describes **WHEN** the system responds to the signal loss:

- If the Process Interlock is set to **None**, this function is disabled
- If the Process Interlock is set to **Full**, the system will stop the UV lamp/s from running if the system is in start-up or running mode
- If the Process Interlock is set to **Running**, the system will only stop the UV lamp/s from running if the system is in running and ignores if the signal has been lost if the system is in start-up.

Miscellaneous Signals

Critical / Non Critical Healthy - Both of these Digital Output signals indicate if a Critical Fault or Non-Critical Alarm has been experienced and are wired into DO1 and DO2 respectively on the ATUV1020. The Digital Output energises when the Fault / Alarm has occurred.

Running - This Digital Output signal provides an indication that the system is running. This output energises as soon as the lamp/s strike or are running.

Dose Healthy - This Digital Output signal provides an indication that the Dose is Healthy and will energise when the Dose is above the **DOSE ALARM LEVEL** for **GOOD DOSE TIME** and is connected into DO5 on the ATUV1020.

MODBUS Communication

Introduction

The Spectra II UV disinfection system has built in Modbus RTU for control and monitoring of the systems performance parameters.
This document is aimed at end users and system integrators of the Spectra II UV disinfection system and covers the following:

- Modbus implementation
- Modbus maintenance
- Modbus debugging

Supported Interface

Spectra II works as a slave device and is implemented in accordance with the EIA/TIA-485 (RS-485) standard, supporting the following:

- 2 or 4 wire interface
- Odd, even and no parity
- Baud rates 9600 to 115200
- One or two stop bits

Physical Connection

Cable Connection

Connection to the Spectra is via the Modbus Slave port on the ATUV-1010 motherboard.



An RJ45 connection is required with the following pin out:

Modbus Slave Pin out		
1	Rx+	Receive positive
2	Rx-	Receive negative
3		
4	Tx-	Transmit negative
5	Tx+	Transmit positive
6		
7		
8	Ground	Reference ground

2 / 4 wire selection

Both 2 and 4 wire interfaces are supported, this is selected using a 4 way header on the ATUV-1010. No jumpers indicate 4 wire interface, for 2 wire interface 2 jumpers should be fitted.

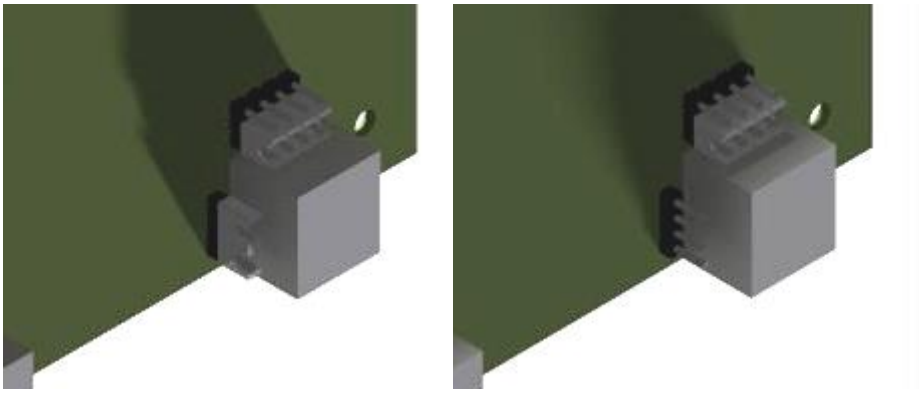

ATUV-1010 with (left) and without jumpers (right)

Data Transmission

The following parameters are set from the config.xml on the SD card and are found in the ModbusSlave directory.

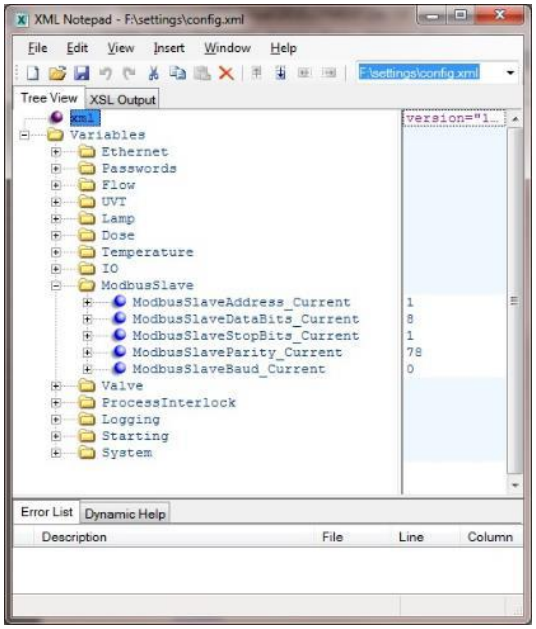

Slave Address

ModbusSlaveAddress_Current	
Description: Used to set this slave address of the Spectra unit.	
Selectable Values	1 - 99

Data Bits

ModbusSlaveDataBits_Current	
Description: Used to select the number of data bits in the Modbus frame.	
Selectable Values	7
	8

Stop Bits

ModbusSlaveStopBits_Current		
Description: Used to select the number of stop bits in the Modbus frame.		
Selectable Values	1	
	2	

Parity

ModbusSlaveParity_Current		
Description: Used to select the parity checking of the Modbus frame.		
Selectable Values	N (78)	None
	E (69)	Even
	O (79)	Odd

Baud Rate

ModbusSlaveBaud_Current		
Description: Used to select the transmission baud rate.		
Selectable Values	0	115200
	1	57600
	2	38400
	3	19200
	4	9600

Message Structure

General Structure

Modbus frames are structured in the following format:

Address	Function Code	Data	CRC
8 bits	8 bits	N x 8 Bits	16 bits

Address		
Description: Single byte used to identify the slave address		

Function Code	
Description: Consists of a single byte and is used to tell the address slave what action to perform, the following function codes are supported:	
0x03	Read Holding Registers
0x04	Read Input Register
0x06	Write Single Register
0x10	Write Multiple Registers

Data		
Description: Multiple bytes containing the actual data		

CRC		
Description: Consists of 2 bytes which are a result of a cyclic redundancy check calculation performed on the message content.		

Read Data

Function code 0x03 and 0x04 requests from the mater should be structured in the following format:

Address	Function Code	Data		CRC
		Register Start Address	Number of Registers	
8 bits	0x03 or 0x04	16 Bits	16 Bits	16 bits

The Spectra will reply to a successful read request in the following format:

Address	Function Code	Byte Count	Data	CRC
8 bits	0x03 or 0x04	8 bits	N x 8 bits	16 bits

Write Data

Write Single Register

Function code 0x06 frames from the master should be structured in the following format:

Address	Function Code	Data		CRC
		Register Address	Data	
8 bits	0x06	16 bits	16 bits	16 bits

The Spectra will reply to a successful write by sending an echo of the request.

Write Multiple Registers

Function code 0x10 frames from the master should be structured in the following format:

Address	Function Code	Data				CRC
		Register Start Address	Number of registers	Byte Count	Data	
8 bits	0x10	16 bits	16 bits	8 bits	N x 8 bits	16 bits

The Spectra will reply to a successful write by sending an echo of the request.

Data Storage

The data stored in the Spectra is arranged as a database, which is accessed for read or write using 16-bit words arranged to give access to control, status and configuration data.

Each parameter has an associated Read / Write attribute associated with it. A byte written to a read only address will be ignored with no exception generated. Similarly a byte read from a write only address will return 0 with no exception generated.

Writing to an undefined address within the allowable data range is ignored; similarly reading an undefined address will return 0. Again no exception will be generated.

Attempting to write or read data from an area outside the allowable data range will result in the transmission of an exception message.

Changes to data written from the master are actions immediately upon receipt.

Resister Examples

System Control	
Description: Start, Stops & Resets faults present on the system. Note: Spectra requires to be set to Remote to start/stop the system via Comms.	
Address	46020
Type	uint_16
Read / Write	Read / Write
Example	0 - Stop 1 - Start

System Control Mode	
Description: Selects the power level of the system.	
Address	46023
Type	uint_16
Read / Write	Read / Write
Example	0 – Full 1 - Variable 2 – Low

Lamps in use	
Description: Indicates the number and order of lamps enabled.	
Address	50020
Units	Y / N
Type	uint_16
Read / Write	Read only
Example	Value of 5 would indicate that lamps 1 and 3 are enabled. (YNYN NNNN NNNN NNNN / 1010 0000 0000 0000)

UV Sensors in use	
Description: Indicates the number and order of UV sensors enabled.	
Address	50028
Units	Y / N
Type	uint_16
Read / Write	Read only
Example	Value of 3 would indicate that sensors 1 and 2 are enabled. (YYNN NNNN NNNN NNNN / 1100 0000 0000 0000)

Fatal Alarms	
Description: Displays the status of the fatal alarms	
Address	46009
Type	uint_16
Read / Write	Read only
Example	0 – No fatal alarms 1 – Common IO Watchdog Error 2 – Lamp Watchdog Error 4 – Earth Leakage Fault 8 – Local Stop Fault 16 – Single Board Compute Unresponsive

Critical Alarms	
Description: Displays the status of the critical alarms	
Address	46010
Type	uint_16
Read / Write	Read only
Example	0 – No critical alarms 1 – PSU over temperature 2 – Control Panel over temperature 4 – Chamber temperature fault 8 – Lamp fault 16 – Low UV dose fault 32 – Process Interlock shutdown 64 – Valve Failed to Close 128 – Conductivity probe fault 256 – SD Card not found 512 – Common IO not calibrated 1024 – Single lamp module not calibrated 2048 – Lamp modules less than expected 4096 – Valve Failed to Open 8192 – Flow Meter Out of Range

Non-Critical Alarms	
Description: Displays the status of the non-critical alarms	
Address	46011
Type	uint_16
Read / Write	Read only
Example	0 – No non-critical alarms 1 – Process interlock interrupt 2 – Low UV dose alarm 4 – Wiper alarm 8 – Lamp life alarm 16 – Chamber temperature alarm 32 – Power Loss When Running

System Status	
Description: Displays the overall status of the system.	
Address	46008
Type	uint_16
Read / Write	Read only
Example	0 – Normal Stop 1 – Running 2 – Starting Up 4 – Fatal Fault 8 – Critical Fault 16 – Non-Critical Alarm 32 – Stopped Restrike, Stopped Non-Critical, Stopped Critical, Stopped Fatal, Stopped Process Interlock

Lamp x Status	
Description: Displays status of the requested lamp	
Address	50800 to 50807 (lamp 1 to 8)
Type	uint_16
Read / Write	Read only
Example	1 – Critical – Failed to Strike – High Current in Start-up 2 – Critical – Failed to Strike – Low Current in Start-up 4 – Critical – Failed to Warm-up – High Current in Warm-up 8 – Critical – Failed to Warm-up– Low Current in Warm-up 16 – Critical – Failed to Enter Running Mode – High Current 32 – Critical – Failed to Enter Running Mode – Low Current 64 – Critical – Failed in Running Mode – High Current 128 – Critical – Failed in Running Mode – Low Current 256 – Lamp Off 512 – Lamp Striking 1024 – Lamp Warming Up 2048 – Lamp Running 32768 – Non Critical – Lamp Hours Expired

Full Register Map

Address	Description	Units (Default)	Type	Read / Write
46000	Flow Rate	m3/hr (x10)	unit_16	Read
46001	Chamber Temperature	°C (x10)	unit_16	Read
46002	UV Dose	mJ/cm2 (x10)	unit_16	Read
46003	Average UV Intensity	mW/cm2 (x10)	unit_16	Read
46004	Average Lamp Current	Amps (x1000)	unit_16	Read
46005	System UVT	% (x10)	unit_16	Read
46006	System Power Level	% (x10)	unit_16	Read
46007	Rolling Watchdog	(x1)	unit_16	Read
46008	System Status	(See example)	unit_16	Read
46009	Fatal Alarms	(See example)	unit_16	Read
46010	Critical Alarms	(See example)	unit_16	Read
46011	Non-Critical Alarms	(See example)	unit_16	Read
46012	System Hours	Hours (x 24)	unit_16	Read
46013	Dose Set-point	mJ/cm2	unit_16	Read
46020	System Control	(See example)	unit_16	Read / Write
46021	Comms Flow Rate	m3/hr	unit_16	Read / Write
46022	Comms UVT	% (x10)	unit_16	Read / Write
46023	System Control mode	(See example)	unit_16	Read / Write
46024	Reset Alarms	0 – No reset 1 – Reset Alarms	unit_16	Read / Write
46025	Force Wiper Run	0 – No Run 1 – Force Run	unit_16	Read / Write
46030	Lamps in use (1-16)	Bit map	unit_16	Read
46031	Lamps in use (17-32)	Bit map	unit_16	Read
46034	Sensor in use	Bit map	unit_16	Read
46035	Local / Remote	0 – Local 1 – Remote 2 - Comms	unit_16	Read
46036	Flow meter Source	0 – Static Flow 1 – Comms 2 – Flow Meter	unit_16	Read

Address	Description	Units (Default)	Type	Read / Write
46037	Dose Units	0 – mJ/cm2 1 – J/m2 2 – J/cm2	unit_16	Read
46038	Flow Units	0 – m3/hr 1 – BPM 2 – l/s 3 – Ml/d 4 – GPM 5 - MGD	unit_16	Read
46039	Intensity Units	0 – mW/cm2 1 – W/m2		
46040	Temperature Units	0 - °C 1 - °F	unit_16	Read
46041	Lamp Life Set point	Hours	unit_16	Read
46042	Restrike timer	Seconds	unit_16	Read
46043	Low Dose Time	Seconds	unit_16	Read
46044	Static Flow Rate	m3/hr	unit_16	Read
46045	Flow meter Max	m3/hr	unit_16	Read
46046	Nominal Lamp Current	A	unit_16	Read
46048	Dose Alarm Level	mJ/cm2	unit_16	Read
46049	Dose Fault Level	mJ/cm2	unit_16	Read
46050	Fault Temperature	°C	unit_16	Read
46051	Alarm Temperature	°C	unit_16	Read
46052	Power Level	%	unit_16	Read
46053	Auto Restart		unit_16	Read
46055	Conductivity Probe Delay	Seconds	unit_16	Read
46056	Restrike Countdown Timer	Seconds (counts down upon lamp(s) extinguishing)	unit_16	Read

Address	Description	Units (Default)	Type	Read / Write
47000 – 47031	Lamp Current 1 to Lamp Current 32	A (x1000)	unit_16	
47100 – 47115	UV Intensity 1 to UV Intensity 16	mW/cm2 (x100)	unit_16	
47200 – 47231	Lamp Hours 1 to Lamp Hours 32	Hours	unit_16	
47300-47331	Lamp 1 Strikes – Lamp 32 Strikes		unit_16	
50454 & 50455	Log Inactivation	(x10)	Float	Read

Trouble Shooting

Should a fault occur, please see below for troubleshooting guide.

NOTE: Should more than one fault occur, the fault screen with the highest priority will be displayed. Pressing DOWN on the keypad accesses the lower priority screens. Once the cause of the alarm or fault has been rectified, pressing the reset button on the front membrane will reset the alarm.

System does not operate

Message	
No Message	
Possible Cause	**Possible Solutions**
Main Power Source is OFF	Ensure there is power to the system
Isolator is in the OFF Position	Ensure both the Isolator and all MCB's are turned ON.
Incorrect Supply Voltage	Ensure the correct voltage is being supplied to the system
Faulty 24VDC Power supply	Ensure the 24VDC power supply LED is energized (healthy), and 24VDC +/- 1V is being measured from the output
Isolator Fuse has blown (If fitted)	Check Isolator fuse before replacing.
Control Transformer is Faulty (if fitted)	Check that 230V AC appears between terminals L & N on the 24VDC power supply

No CRC Was Found

Message	
No Kernel CRC Found	
Reasons	**Possible Solutions**
SD card not inserted upon power on	Ensure the SD card is inserted correctly
The Spectra2.afx.S19 file is missing from the SD card	Ensure the Spectra2.afx. file is located in the root of the SD card

Earth Leakage Fault

Message		
Earth Leakage Ground Fault		
Reason	**Possible Causes**	**Possible Solutions**
Current has been detected through earth via the Earth fault monitor causing DI2 to de-energise	Moisture has entered inside the quartz	Check the seals are not allowing liquid inside the quartz. Also check that the quartz hasn't broke or cracked.
	Previous ELR fault has not been reset	Ensure the Test button on the ELR has not been pressed and/or has been reset
	Faulty Lamp	Check for visible damage to UV lamp (e.g. cracks in lamp)
	Faulty Connection	Check for visible damage to lamp cables and or any loose connections on the detection relay & current transformer.

Lamp Fault – Low Current

Lamp current is monitored and displayed on the Spectra. Upon Start-up, the lamp experiences a high in-rush current to ignite the gases in the lamp. The Spectra requires a current above 10% of the *Nominal Lamp Current* before the *Lamp Strike Time* elapses but must not exceed the 250%. When the lamp has ignited, the Spectra allows the current to decrease between 10% & 115% of the *Nominal Lamp Current* before the *Lamp Warm-up Time* elapses.

Message		
Failed to Strike Low Current Or Low Current While Running		
Reasons	**Possible Causes**	**Possible Solutions**
Lamp Current did not exceed 'Lamp Min Current Start-up' of nominal **Or** **Lamp Current dropped below 'Lamp Min Current Running' of nominal**	Faulty UV lamp	Check for visible damage to UV lamp (e.g. cracks in lamp)
	Faulty Connection	Check for visible damage to lamp cables and connections
	Contactors are not energising	Ensure DO1, 2, 3, 4 energise on the ATUV-1031 at full power. If Thyristor controlled, ensure 20mA is being sourced from AO3 on the ATUV-1020 at full power
	Tripped Circuit breaker	Ensure the Lamp Circuit Breaker hasn't tripped or is turned off upon Start-up
	CT not connected/set up correctly	Check with Clamp meter if lamp is running by measuring the lamp current and comparing it to the Lamp Current displayed on the Spectra

Lamp Current did not exceed 'Lamp Min Current Start-up' of nominal **Or** **Lamp Current dropped below 'Lamp Min Current Running' of nominal (cont.)**	Incorrect Nominal Lamp Current has been set	Check "Nominal Lamp Current" value is correct for the type of Lamp
	Incorrect allowable current upon start-up/running	Check the 'Lamp Min Current Start-up/Running' value is correct (**Normal Setting:** 10%/10% respectively)
	Faulty Capacitor	Faulty capacitors can normally be identified by their swollen/bulged body.
	Inconsistent power supplied to the system	Check the power to the system is not experiencing any voltage dips. A decrease in voltage would cause a decrease in current through the lamp.
	Other large equipment is starting	If other large equipment is starting (e.g pump) when the UV system is starting, the voltage across the UV lamp may dip long enough (milli-seconds) for the arc to decay.

Lamp Fault – High Current

Message		
High Current in Start-up Or High Current While Running		
Reason	**Possible Causes**	**Possible Solutions**
Lamp Current exceeded 'Lamp Max Current Start-up' of nominal **Or** **Lamp Current exceeded 'Lamp Min Current Running' of nominal**	Incorrect Voltage to lamp/s	Check the Voltage Tapping on the Choke/Transformer corresponds to the Voltage as the incoming supply
	Incorrect Nominal Lamp Current has been set	Check "Nominal Lamp Current" value is correct for the type of Lamp.
	Inconsistent power supplied to the system	Check the power to the system is not experiencing any voltage surges/spikes. An increase in voltage would cause an increase in current through the lamp.
	Faulty Connection	Check for visible damage to lamp cables and connections
	Incorrect allowable current upon start-up/running	Check the 'Lamp Max Current Start-up/Running' value is correct (**Normal Setting:** 250%/115% respectively)

Low Dose

Message		
Low Dose Alarm Or Low Dose Fault		
Reason	Possible Causes	Possible Solutions
Dose Drops below Alarm Level/Fault Set-points	Fouling/deposits blocking UV light to the Sensor	Check the Quartz window for deposits on the inside or outside. Any coating can reduce the amount of UV light passing through to the UV Sensor. The amount of UV Light that will pass through the Quartz decreases as it ages and should be changed approximately every 18 months.
		Check for fingerprints on both the Quartz & UV Lamp. If the Quartz & UV Lamp are handled without gloves, the grease/fatty deposits from the skin can etch themselves onto the surfaces once the lamp is struck.
	UV Transmittance (UVT) of the water has decreased	Ensure water quality is within specification for the UV system installed
	Calibration of UV Probe (if AT-463 is fitted)	Upon commissioning/replacement of lamp, ensure the UV probe has been calibrated to 100% (20mA) when lamp is at full power
	Aging of the Lamp	Check the UV Lamp run time and replace lamp if necessary. UV Intensity decreases as the lamp ages.
	An increase in flow (if flow meter is fitted)	Check the Flow Rate flowing through the system. If a flow meter is enabled, an increase in flow will decrease the Dose. Also check the FLOW METER MAX variable is not set higher than the maximum flow the chamber will experience.
	Dose Alarm/Fault levels are set too high	Check that DOSE ALARM LEVEL and DOSE FAULT LEVEL are set to the correct values.
	UV Probe is not properly connected	Check there is a sensible value displayed on the screen. With the system stopped 4mA should be displayed. The UV LED on the ATUV-1031 should also be illuminated (indicating a closed signal)

Dose Drops below Alarm Level/Fault Set-points (cont.)	As the wiper (if fitted) sweeps across the quartz, the UV intensity may dip long enough for it too cause an alarm.	Check the LOW DOSE TIME value is correct. Force the wiper to carry out a sweep of the quartz to see if it affects the Dose long enough to generate a fault/alarm.
	Air trapped between the sensor and lamp/s	Ensure any air rapped in the chamber is remove as air trapped within the system will not allow UV Light to pass through correctly.
	Possibility of a Faulty probe	Check for visible damage to the probe & probe cable

Control Panel Over-Temperature

Message		
Control Panel Over Temperature		
Reason	Possible Cause	Possible Solutions
The temperature inside panel has exceeded the thermostat cut-out temperature	No air circulation inside panel	Ensure fan filter is not blocked
	Faulty Fan	Check Fan rotates when DO6 on the ATUV-1020 is energised. Check for any loose or damaged connections
	High ambient temperature	Ensure the ambient temperature is not higher than normal

Power Supply Over-Temperature

Message		
Power Supply Over-Temperature		
Reason	**Possible Causes**	**Possible Solutions**
Temperature of power supply has exceeded thermostat cut-out temperature (if fitted)	No air circulation inside panel	Check Filter is not blocked
	Faulty Fan	Check Fan rotates when DO6 on the ATUV-1020 is energized. Check for any loose or damaged connections
	High ambient temperature	Ensure the ambient temperature is not higher than normal

Chamber Over-Temperature

Message		
Chamber Over-Temperature Alarm Or Chamber Over-Temperature Fault		
Reason	**Possible Causes**	**Possible Solutions**
Chamber temperature reading has exceeded temperature Alarm set-point **Or** **Chamber temperature reading has exceeded temperature Fault set-point**	Very slow or static flow through chamber	Check Fluid is flowing through the system at a reasonable flow.
		Check Manual/Auto Valves are Open
	Temperature Fault/Alarm levels set too low for application	Check the initial temperature of fluid flowing through the system
		Check the Fault/Alarm Set-Points are set to the correct/reasonable value
	Faulty Connection	Check for visible damage to the temperature probe & probe cable. Check the resistance across the red/blue and green wires to the temperature sensor (see below for resistance values).
		Check there is a sensible value displayed on the screen and the TEMP LED on the ATUV-1020 is illuminated (indicating a closed signal)

Additional Info: To check calibration figures, a resistance (R) across terminals 9 and 10, and a wire link across terminals 8 and 9 on the ATUV-1020 (TEMP) can be used to confirm the values. A 104Ω resistance should equate to 10°C (50°F) and 138Ω should equate to 100°C (212°F).

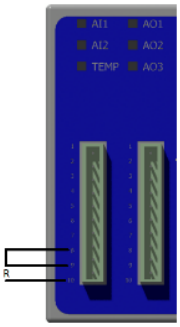

Power Failure While Running

Message	
Power Failure While Running	
Reason	Possible Solutions
The system was running upon power failure or was turned off.	Check for power failure to the UV System
	Check the power supply for any dips/surges in voltage

Lamp Approaching End of Life

Message	
Lamp Approaching End of Life	
Reason	**Possible Solutions**
The lamp life timer has exceeded the recommended run hours	The system has a timer that counts how long the lamp has been running. Once this time is exceeded the UV Lamp should be changed & the Lamp Run hours reset.

Resetting Lamp hours

To Reset the Lamp hours after a Lamp change:
Enter the Operator Menus (Refer to the Set-up Screen Menus – Operator Menus) and scroll down to the LAMP MENU screen and press enter.

- To **reset hours on all Lamps**, select RESET ALL LAMPS by pressing enter on the menu and confirm with Yes.
- To **Reset Individual Lamp hours**, select RESET INDIVIDUAL LAMP HOURS and RESET LAMP # HOURS will appear. Scroll up/down to select the desired Lamp and press enter to select Yes to reset the hours for that particular lamp.

Valve Fault

Once the VALVE FEEDBACK has been enabled, the position of the valve is monitored. If the valve has Opened & Closed limit switches, these can be used to monitor its position. The amount of time taken for the valve open and close can be adjusted using VALVE OPERATION TIME.

Message		
Valve Failed To Open Or Valve Failed To Close		
Reason	**Possible Causes**	**Possible Solutions**
The Valve Feedback digital inputs (DI9 and DI10) have not been detected whether the valve is open or closed within the VALVE OPERATION TIME	Valve/s does not open or close	Check there is power to the valve
		If the valve is pneumatic or solenoid drives, check the air supply is available.
		Check the valve is in Automatic if being used in conjunction with the UV system
		Check that the inline fuse has not blown
		Check the valve is not jammed
		Check the Valve Open digital output (DO4) on the ATUV-1020 is energising
	Valve takes a long time to open/close	Ensure the VALVE OPERATION TIME is set higher than actual opening time of the valve

Local Stop Fault

Message	
Local Stop Fault	
Reason	**Possible Solutions**
System has been stopped from the Spectra while in remote	If the system is running in remote, pressing the Stop button on the Spectra will still stop the system creating a Fatal Fault. This cannot be reset over the Modbus communications network. Pressing the Reset button on the Spectra will restart the system if the remote run signal is still present & the re-strike timer has elapsed.

Process Interlock

Message	
Process Interlock Interrupt Or Process Interlock Shut-down	
Reason	Possible Solutions
Process Interlock signal (DI8 on ATUV-1020) has been lost while running/start-up	Check signal from the Process Interlock device. e.g. Pump is running – Flow Switch has operated etc.
	Check DI8 on the ATUV-1020 is energising when the signal from the Process Interlock is active
	Check Process Interlock Delay time is set to an appropriate time.
	Check for visible damage to signal cables

Wiper Fault

Message	
Wiper Fault	
Reason	**Possible Solutions**
Automatic mechanical wiper has failed to perform sweep	Refer to Automatic Wiper Section of the Manual for Fault Diagnostics.

Common I/O Watchdog

Message	
Common I/O Watchdog Error	
Reason	**Possible Solutions**
Communication to the ATUV-1020 has been lost	Check ethernet connections from the spectra to the ATUV-1020 and the AI3 is illuminated
	Ensure there is power to the module and AO3 LED on the ATUV-1020 is lit

Lamp Watchdog Error

Message	
Lamp I/O Watchdog Error	
Reason	**Possible Solutions**
Communication to the ATUV-1031 has been lost	Check ethernet connections from the ATUV-1020 to the ATUV-1031
	Ensure there is power to the module

Lamp Modules Less Than Expected

Message	
Lamp Modules Less Than Expected	
Reason	**Possible Solutions**
The Number of Lamps/Banks enabled on the spectra has exceeded the actual amount of lamps modules being used	Check the ATUV-1031 address' correspond to the Number of Lamps/Banks and enabled on the Spectra (Please refer to the Spectra II Operations & Maintenance manual for details)
	Check Ethernet connections from Spectra to ATUV-1020 and ATUV-1031

Conductivity Probe Fault

Message		
Conductivity Fault Water Level Low		
Reason	**Possible Causes**	**Possible Solutions**
Conductivity probe signal (DI5 on the ATUV-1020) has been lost	Water level has dropped below required level	Ensure water level is above conductivity probe
	Faulty connection	Check all cable connections and ensure DI5 is illuminated indicating water level is above conductivity probe

Flow Meter Out of Range

Message		
Flow Meter Out of Range		
Reason	**Possible Causes**	**Possible Solutions**
The flow meter input is outside the 4mA and 20mA tolerances	Faulty signal	Ensure the signal from the device to the Spectra is within 4 & 20 mA.
	Faulty connection	Check all cable connections and ensure AI2 LED is illuminated indicating a signal above 3.5 mA.

Service and Maintenance

With regular maintenance, performed by highly trained engineers, flexible service options and exclusive access to OEM components, an atg UV service will vastly cut the risks associated with production down time, product recall and process failure, saving you both time, money and, most importantly, reputation.

Commissioning:

An atg UV commission ensures that your system is correctly installed, calibrated and working at optimum performance from day one. Additionally, commissioning by an authorised atg UV Technician is the first step in validating your industry exclusive five year warranty.

Interim-Service:

An atg UV Interim service provides assurance for industries where UV disinfection is paramount to production/normal operations. The Interim service allows for the identification/prevention of any potential problems before they develop.

Major-Service:

An annual major service is highly recommended in order to keep your system running at optimum performance, avoid unnecessary breaks in production and extend the life of the system. Major services also include replacement of consumables with OEM parts.

To arrange a service or commission, please contact your local authorised service provider, or our UK head office:

servicing@atguv.com

T: +44 (0)1942 216161 – Opt 2

Spare Parts:

The atg UV Team have designed and developed each system and spare part with the upmost care to ensure continued quality, safety and overall longevity of your atg UV Technology system. If non-genuine parts are used to maintain any system, this will invalidate the UV disinfection performance and warranty.

To order genuine spare parts, please contact your local authorised service provider, or the UK head office

E: spares@atguv.com

T: +44 (0)1942 216161 – Opt 1

For any other queries:

E: technical@atguv.com

T: +44 (0)1942 216161 – Opt 2

LISTENING TO & WORKING WITH **OUR CUSTOMERS** FOR OVER 30 YEARS

For further support, please contact your local authorised service provider. Alternatively, contact our uk head office:-

FOR GENUINE SPARE PARTS:

E: spares@atguv.com | T: +44 (0)1942 216161 – Opt 2

TO ARRANGE A SERVICE OR COMMISSION:

E: servicing@atguv.com | T: +44 (0)1942 216161 – Opt 2

FOR ANY OTHER ENQUIRIES:

E: info@atguv.com | T: +44 (0)1942 216161 - Opt 2

atg UV Technology
Genesis House
Richmond Hill
Wigan
WN5 8AA
United Kingdom

online: www.atguv.com

EXPERTS IN ULTRAVIOLET DISINFECTION

atg UV Technology