GOULDS WATER TECHNOLOGY
xylem

Technical brochure
B4SD R7



4SD

Submersible sewage pump
Dual seal with seal sensor probe

xylem
Let's Solve Water

Features

Impeller: Cast iron, two vane semi-open, non-clog with pump-out vanes for mechanical seal protection. Balanced for smooth operation.

Casing: Heavy duty cast iron, volute type for maximum efficiency. 4" flange conforms to 125 # ANSI standard. Connects to A10-40 or A10-60 guide rail system.

Dual mechanical seals: Silicon carbide vs. silicon carbide outer seal and ceramic vs. carbon inner seal, stainless steel metal parts, BUNA-N elastomers. Upper and lower shaft seals are positioned independently and are separated by an oil-filled chamber.

Seal sensor probe: Located in oil-filled chamber

If pumpage should begin to leak past lower seal it indicates to pump control panel a fault has occurred. **Requires optional Seal Fail Circuit in the control panel.**

Shaft: 300 Series stainless steel keyed design

Fasteners: 300 Series stainless steel

Capable of running dry without damage to components.

Agency listings

Tested to UL 778 and CSA 22.2 108 Standards
By Canadian Standards Association
File #LR38549

Applications

Used in a variety of residential, commercial and industrial applications such as:

- Sewage systems
- Flood and pollution control
- Dewatering/Effluent
- Farms
- Hospitals
- Trailer courts
- Motels

Specifications

Pump:

- **Maximum solid size:** 3”
- **Discharge size:** 4”, 125 # ANSI flange
- **Maximum capacity:** 620 GPM
- **Maximum total head:** 60 feet
- **Fasteners:** 300 Series stainless steel
- **Power cord:** 20’
- **Standard outer seal:** Silicon carbide/silicon carbide

Motor:

- **Maximum ambient temperature:** 104º F (40º C) continuous duty, 140º F (60º C) intermittent duty
- Rated for continuous duty when fully submerged
- **Insulation:** Class F
- 60 Hertz
- Single row ball bearings
- 300 Series stainless steel keyed shaft

Single-phase:

- 1.5 - 5 HP
- 208 and 230 volts
- Built-in thermal overloads with automatic reset
- Built-in capacitors

Three-phase:

- 1.5 - 7.5 HP
- 200, 230, 460 and 575 volts
- Class 10 overload protection must be provided in control panel

Motors

- Fully submerged in oil-filled chamber. High grade turbine oil surrounds motor for more efficient heat dissipation, permanent lubrication of bearings and mechanical seal for complete protection against outside environment.
- Class F insulation
- **Designed for continuous operation:** Pump ratings are within the motor manufacturer’s recommended working limits and can be operated continuously without damage when fully submerged.
- **Bearings:** Upper and lower heavy duty ball bearing construction for precision positioning of parts and to carry thrust loads.
- **Power and control cables:** Severe duty rated, oil and water resistant. Epoxy seal on motor end provides secondary moisture barrier in case of outer jacket damage and to prevent oil wicking. 20 foot standard with optional lengths available.
- **O-ring:** Assures positive sealing against contaminants and oil leakage.

Model and motor information

Order number	HP	Phase	Volts	RPM	Impeller		Maximum amps	Locked rotor amps	KVA code	Power cable	F.L. Motor ffficiency %	Resistance		Weight (lbs.)
					Dia. (In.)	Code						Start	Line-Line	
4SD52F8EA	1.5	1	208	1750	5.63	E	17.2	50.8	B	14/3	80	1.1	0.9	195
4SD52F1EA			230				14.7	29.5	E		70	1.4	1.8	
4SD52F2EA		3	200				11.5	40.9	H	14/4	81	NA	1.7	
4SD52F3EA			230				10.0	40.0	F		83		2.3	
4SD52F4EA			460				5.0	20.0	F		83		9.3	
4SD52F5EA			575				4.0	14.4	H		74		14.8	
4SD52F8DA	1.5	1	208		6.25	D	17.2	50.8	B	14/3	80	1.1	0.9	195
4SD52F1DA			230				14.7	29.5	E		70	1.4	1.8	
4SD52F2DA		3	200				11.5	40.9	H	14/4	81	NA	1.7	
4SD52F3DA			230				10.0	40.0	F		83		2.3	
4SD52F4DA			460				5.0	20.0	F		83		9.3	
4SD52F5DA			575				4.0	14.4	H		74		14.8	
4SD52G8CA	2	1	208		6.63	C	20.3	50.8	B	14/3	80	1.1	0.9	200
4SD52G1CA			230				17.3	36.9	D		75	1.4	1.5	
4SD52G2CA		3	200				13.3	40.9	H	14/4	81	NA	1.7	
4SD52G3CA			230				11.6	40.0	F		83		2.3	
4SD52G4CA			460				5.8	20.0	F		83		9.3	
4SD52G5CA			575				4.6	14.4	H		74		14.8	
4SD52H8BA	3	1	208		7.00	B	25.5	50.8	B	10/3	80	1.1	0.9	208
4SD52H1BA			230				21.5	46.4	C		79	1.0	1.0	
4SD52H2BA		3	200				16.6	53.8	G	10/4	85	NA	1.3	205
4SD52H3BA			230				14.4	49.5	H	14/4	83		1.9	
4SD52H4BA			460				7.2	24.8	H		83		7.5	
4SD52H5BA			575				5.8	17.3	G		78		11.6	
4SD52J1AA	5	1	230		7.25	A	26.5	57.7	A	10/3	80	1.0	0.8	213
4SD52J2AA		3	200				19.1	73.9	F	10/4	84	NA	0.9	210
4SD52J3AA			230				16.6	63.6	E		85		1.2	
4SD52J4AA			460				8.3	31.8	E	14/4	85		4.8	
4SD52J5AA			575				6.6	22.8	E		80		7.4	
4SD52K3FA	7.5	3	230		7.69	F	23.0	105.0	G	10/4	83	NA	0.7	225
4SD52K4FA			460				11.5	52.5	G		83		2.8	
4SD52K5FA			575				9.2	42.0	E		84		4.4	

Dimensions

(All dimensions are in inches. Do not use for construction purposes.)

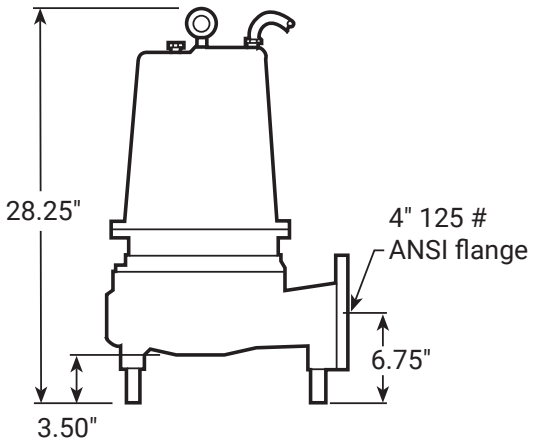

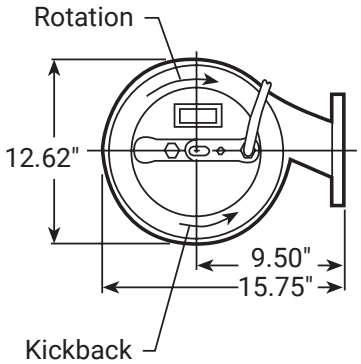

Fittings pipe connectors

Short radius elbow:

- Cast iron construction
- 125 lb. ANSI rated flange at pump end
- 4" NPT threaded connection for discharge pipe

Flange size	Order number	Used with
4"	A1-6	4", 125# ANSI flange

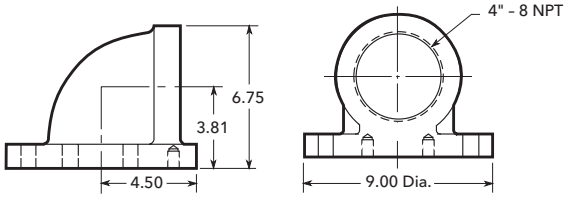

Application data

Maximum solid size	3"
Minimum casing thickness	5/16"
Casing corrosion allowance	1/8"
Maximum working pressure	30 PSI
Maximum submergence	50 feet
Minimum submergence	Fully submerged for continuous operation
	6" below top of motor for intermittent operation
Maximum environmental temperature	40°C (104°F) continuous operation
	60°C (140°F) intermittent operation

Construction details

Power cable – type	14/3, type SJTOW: single-phase, 1/2 and 2 HP
	14/4, type STOW: single-phase, 1½ - 3 HP and 5 HP, 460 V
	10/4, type STOW: single-phase, 3 and 5 HP, three-phase 5 HP, 230 V and 7½ HP
Sensor cable – type	16/2, type SJTOW: seal sensor only
	18/4, type SJTOW: seal/heat sensor
Motor cover	Gray cast iron – ASTM A48 Class 30
Bearing housing	Gray cast iron – ASTM A48 Class 30
Seal housing	Gray cast iron – ASTM A48 Class 30
Casing	Gray cast iron – ASTM A48 Class 30
Impeller	Gray cast iron – ASTM A48
Motor shaft	AISI 300 Series stainless steel
Motor design	NEMA 56 Frame, oil filled with Class F Insulation
Motor overload protection	Single-phase: on winding thermal overload protection
	Three-phase: require ambient compensated Class 10, quick trip overloads in the control panel.
Motor seal fail (moisture) detection	Seal fail sensor in an oil-filled seal chamber. Connect to an optional relay in control panel.
Optional motor thermal protection	Normally closed on-winding thermostats open at 275° F (135 °C) and close at 112° F (78° C). Require terminal connection in the control panel.
External hardware	300 Series stainless steel
Impeller type	Semi-open with pump out vanes on back shroud
Oil capacity – seal chamber	1.75 quarts
Oil capacity – motor chamber	1½-5 HP single and three-phase: 7 quarts
	7½ HP three-phase: 6.5 quarts

Standard parts

Ball bearing	Upper	1 1/2 – 5 HP single and three-phase: single row ball– SKF™ 6204-2Z
		7 1/2 HP three-phase: single row ball – SKF 6204-2Z
	Lower	1 1/2 – 5 HP single and three-phase: single row ball – SKF 5206-2Z
		7 1/2 HP three-phase: double row ball – SKF 5206-2Z
Mechanical seals – standard	Upper	carbon/ceramic, type 21
	Lower	Silicon carbon/silicon carbon, Type 31
Mechanical seals – optional lower		Silicon carbide/tungsten carbide, Type 21
O-ring – stuffing box		BUNA-N, AS 568A-265
O-ring – motor cover		BUNA-N, AS 568A-374

Nomenclature description

1st, 2nd and 3rd character – discharge size and type

4SD = 4" discharge, 3" solids handling, dual seal with seal fail probe in pump.

4th character – mechanical seals

5 = Silicon carbide/silicon carbide/BUNA – lower seal and carbon/ceramic/BUNA – upper seal (standard)

3 = Silicon carbide/tungsten carbide/BUNA – lower seal and carbon/ceramic/BUNA – upper seal (optional)

5th character – cycle/RPM

2 = 60 Hz/1750 RPM

6th character – horsepower

F = 1½ HP H = 3 HP K = 7½ HP

G = 2 HP J = 5 HP

7th character – phase/voltage

1 = single-phase, 230 V 4 = three-phase, 460 V

2 = three-phase, 200 V* 5 = three-phase, 575 V

3 = three-phase, 230 V 8 = single-phase, 208 V

* Not available on 7½ HP.

8th character – impeller diameter

A = 7.25", 5 HP D = 6.25", 1½ HP

B = 7.00", 3 HP E = 5.63", 1½ HP

C = 6.63", 2 HP F = 7.69", 7½ HP

9th character – cord length (power and sensor)

A = 20' (standard) F = 50'

D = 30' J = 100'

10th character – options

E = Epoxy paint

11th character – option

H = Pilot duty thermal sensors **(3-phase only)**

Materials of construction

Item no.	Part name	Material	
		Standard	Optional
1	Impeller, non-clog	1003	-
2	Casing	1003	-
3	Shaft-keyed	300 Series SS	-
4	Fasteners	300 Series SS	-
5	Ball bearings	Steel	-
6	Power cable	STOW, 20 feet	Additional lengths
	Seal sensor cable		
7	O-ring	BUNA-N	-

8	Outer mech. seal	Service	Rotary	Stationary	Elastomers	Metal parts
	OPT	Heavy duty	Silicon carbide		BUNA-N	300 Series SS
	STD	Mild abrasives	Silicon carbide		BUNA-N	300 Series SS

Material code	Engineering standard
1003	Cast iron — ASTM A48 Class 30

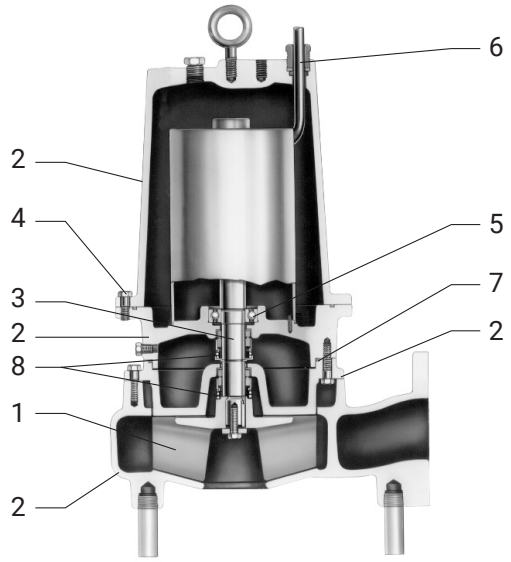

Standard panel options

Order number	HP	Phase	Volts	SF amps	Simplex panel part number	Duplex panel part number
4SD52F8EA	1.5	1	208	17.2	SDS11522	SDD11522
4SD52F1EA			230	14.7	SDS17015	SDD17015
4SD52F2EA		3	200	11.5	SDS39014	SDD39014
4SD52F3EA			230	10	SDS39014	SDD39014
4SD52F4EA			460	5	SDS34063	SDD34063
4SD52F5EA			575	4.0	SDS340635	SDD340635
4SD52F8DA		1	208	17.2	SDS11522	SDD11522
4SD52F1DA			230	14.7	SDS17015	SDD17015
4SD52F2DA		3	200	11.5	SDS39014	SDD39014
4SD52F3DA			230	10	SDS39014	SDD39014
4SD52F4DA			460	5	SDS34063	SDD34063
4SD52F5DA			575	4	SDS340635	SDD340635
4SD52G8CA	2	1	208	20.3	SDS11522	SDD11522
4SD52G1CA			230	17.3	SDS11522	SDD11522
4SD52G2CA		3	200	13.3	SDS31318	SDD31318
4SD52G3CA			230	11.6	SDS39014	SDD39014
4SD52G4CA			460	5.8	SDS34063	SDD34063
4SD52G5CA			575	4.6	SDS340635	SDD340635
4SD52H8BA	3	1	208	25.5	SDS12228	SDD12228
4SD52H1BA			230	21.5	SDS12228	SDD12228
4SD52H2BA		3	200	16.6	SDS31318	SDD31318
4SD52H3BA			230	14.4	SDS31318	SDD31318
4SD52H4BA			460	7.2	SDS36010	SDD36010
4SD52H5BA			575	5.8	SDS340635	SDD340635
4SD52J1AA	5	1	230	26.5	SDS12228	SDD12228
4SD52J2AA		3	200	19.1	SDS31723	SDD31723
4SD52J3AA			230	16.6	SDS31318	SDD31318
4SD52J4AA			460	8.3	SDS36010	SDD36010
4SD52J5AA			575	6.6	SDS360105	SDD360105
4SD52K3FA	7.5	3	230	23	SDS32025	SDD32025
4SD52K4FA			460	11.5	SDS39014	SDD39014
4SD52K5FA			575	9.2	SDS360105	SDD360105

Notes



Learn more about SD Series Duplex Panels

Xylem Inc.

xylem.com/goulds

This information is subject to change without notice. All information presented herein is believed reliable and in accordance with accepted engineering practices. Xylem makes no warranties as to the completeness of this information. Users are responsible for evaluating individual product suitability for specific applications. Xylem assumes no liability whatsoever for any special, indirect or consequential damages arising from the sale, resale or misuse of its products.

© 2026 Xylem Inc. or its affiliate. All rights reserved. Xylem is a registered trademark of Xylem Inc. or one of its subsidiaries. Goulds Water Technology is a registered trademark of ITT Manufacturing Enterprises LLC and is used under license. All other trademarks or registered trademarks are the property of their respective owners.

B4SD R7 6/2026

xylem
Let's Solve Water