xylem



Lowara X-Pro
Residential water pressure, made simple.

Compact, all-in-one self-priming booster for everyday residential pressure needs.

Residential water pressure can be too low or vary as demand changes. X-Pro brings the pump, variable-speed pressure control and integrated pressure tank together in one compact, self-priming package — a straightforward solution for common residential pressure-boosting applications.



5 m³/h | 45 m | 600 W
*Self-priming up to 8 m**

All in one
Pump, variable-speed pressure control and tank integrated in one compact package.

Straightforward
Compact dimensions and simple pressure setting help simplify installation and commissioning.

Backed by Lowara
A Lowara solution for common residential applications, supported by Xylem water expertise.

Best fit
- Residential pressure boosting
- Tank supply
- Shallow wells
- Water transfer
- Garden irrigation

LOWARA xylem

Choose X-Pro with confidence

Use the application first — then verify the required duty point and suction conditions.

Application at a glance

Source	Typical need	X-Pro fit
Mains*	Low / variable pressure	Integrated variable-speed boosting
Tank / cistern	Stored water supply	Self-priming; compact package
Shallow well	Domestic water supply	Up to 8 m suction lift*
Water transfer	Transfer between sources	Straightforward residential solution
Garden irrigation	Variable outdoor demand	Up to 5 m³/h within pump curve

* Maximum suction lift under defined installation conditions; consult the installation and operating instructions. Mains boosting is subject to local regulations.

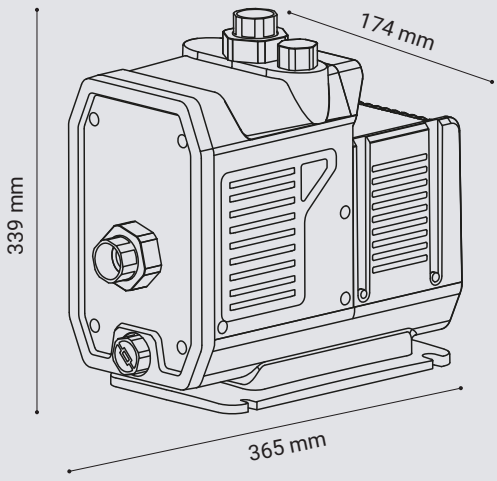

Compact size

Product display



- X-Pro-1.5 bar
- X-Pro-2.0 bar
- X-Pro-2.5 bar
- X-Pro-3.0 bar
- X-Pro-3.5 bar
- X-Pro-4.0 bar
- X-Pro-4.5 bar

Performance curve

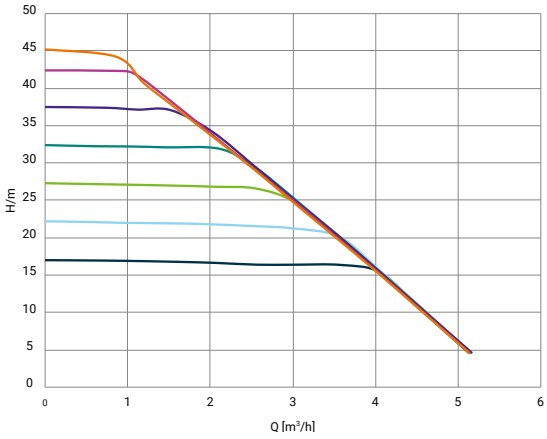

Technical snapshot

Max. flow	5 m³/h
Max. head	45 m
Nominal duty	3 m³/h @ 30 m
Motor input	600 W
Connections	G1 internal thread
Protection	IP44
Compliance and approvals	WRAS, MD 2006/42/EC, EMC 2014/30/EU, RoHS 2011/65/EU, REACH (EC) No 1907/2006, RAEE 2012/19/UE WEEE, GS Mark Co-license

Select with confidence

1. **Confirm the water source**
   Mains, tank/cistern, shallow well or transfer application. Check local rules for mains boosting.

2. **Define the demand**
   Required flow, residual pressure, building height and simultaneous use.

3. **Verify the duty point**
   Check the pump curve, suction lift and installation conditions before selection.

Why X-Pro?

One integrated package. Straightforward set-up. Practical coverage for common residential applications. A clear Lowara choice when compactness and simple selection matter.

Backed by Lowara

Part of the Lowara residential water portfolio, supported by Xylem water expertise.

© 2026 Xylem Inc. or its subsidiaries or affiliates. Lowara is a trademark of Xylem Inc., its subsidiaries or affiliates in some countries.

09/2026

xylem Let's Solve Water