xylem
Let's Solve Water

Series e-80X Smart Pumps

Integrated pump, motor & variable speed drive solutions, **powered by hydrovar® X**



Series e-80X Smart Pumps feature the right combination of ultra-premium efficient motors with integrated variable speed drives and pumps to ensure great performance and a rapid return on investment in nearly any application. The result is intelligence, performance, connectivity, and simplicity in one comprehensive package, from one reliable source - Bell & Gossett.

Simple: Built-in application software makes the drive one of the easiest to commission, program and operate, enabling virtually any configuration of pumps.

Sustainable: No rare earth materials are used to minimize product availability challenges and address environmental concerns while offering smart technology and superior performance.

Intelligent performance: Advanced system controls (up to 8 pumps) are customizable for a wide range of applications. The IE5 "ultra-premium" hydrovar X smart motor provides one of the broadest efficiency ranges in the industry.

Built-in protections: Integrated functions provide protection for the pump and motor while optimizing performance.

Easy service: VFD and/or motor can be easily replaced individually, minimizing downtime and expensive repair.

Ease of installation & maintenance: Integrated pump and hydrovar X motor design eliminates the need for additional mounting plates, wiring and associated costs.

Compact motor design: hydrovar X motors offer higher performance with a reduced footprint when compared to legacy generation Hydrovar or e-80 ITSC solutions. Increased performance reduces electricity consumption and lowers life cycle costs.

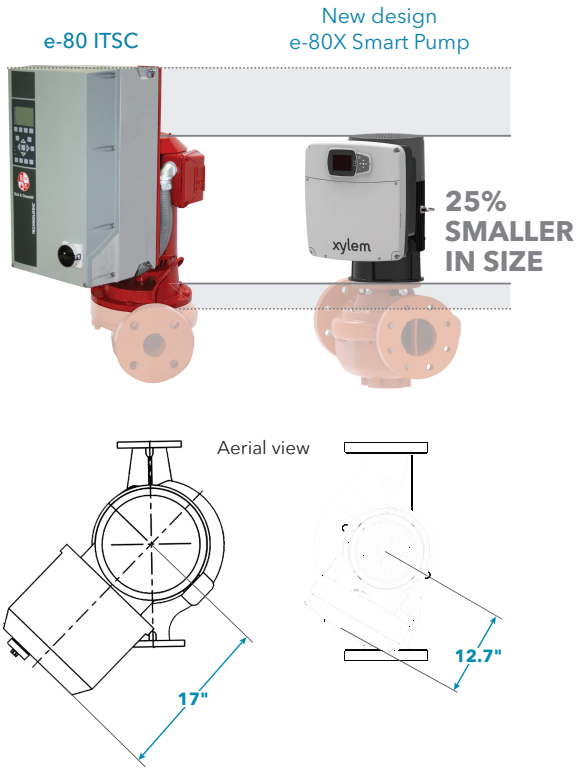

The e-80X Smart Pump is 25% smaller than the legacy e-80 ITSC (3x3x11B, 254JM motor frame)

Unleash the power of hydrovar X!

Don’t hold back your imagination!

With the graphical color display, you can quickly set-up and navigate the menu of your unit: check all the parameters and choose the perfect unit configuration to fit your installation. No time to do it? Genie will start up and run the unit for you!

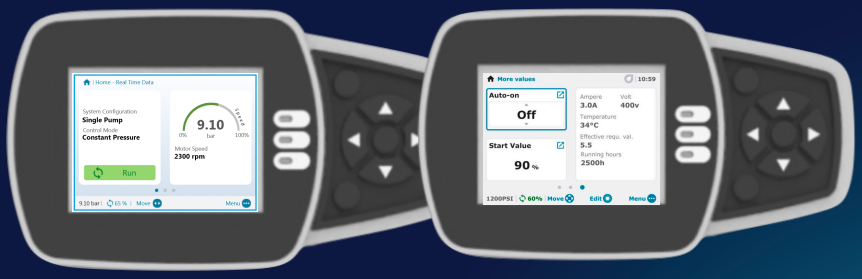

Check your systems from wherever

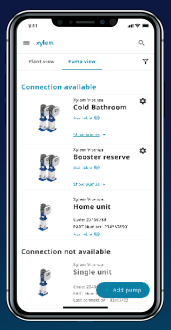

Download the mobile app

hydrovar X and Avensor, better together!

hydrovar X can communicate with Avensor, Xylem’s IoT platform, for a complete overview of all connected assets, anytime, anywhere. Avensor collects historical data to analyze trends and generate alerts preventing failures and equipment downtime.

e-80X Smart Pump Specifications

Flow rate:	up to 1400 GPM (318 m³/hr)
Head:	up to 428 ft (130 m)
Temperature of pumped liquid:	Up to 250°F (121°C)
Maximum operating pressure:	175 psi (12 bar)
Environment temperature:	-4°F to 122°F (-20°C to 50°C)

hydrovar X Smart Motor Specifications

Display:	Graphic color
Controls:	Actuator, Constant Pressure. Proportional Pressure, Proportional Quadratic Pressure, Constant Flow, Constant Temperature, Constant Level
Multi-pump:	up to 8 pumps
Enclosure:	IP55/NEMA4
Working temperature:	-4°/+122°F (-20°/+50°C)
Communication protocols:	MODBUS® RTU, BACnet MS/TP
Features:	IE5 synchronous motor
Mobile app:	Bluetooth®

e-80X Smart Pump Family Curves

High Speed Hydraulic Performance

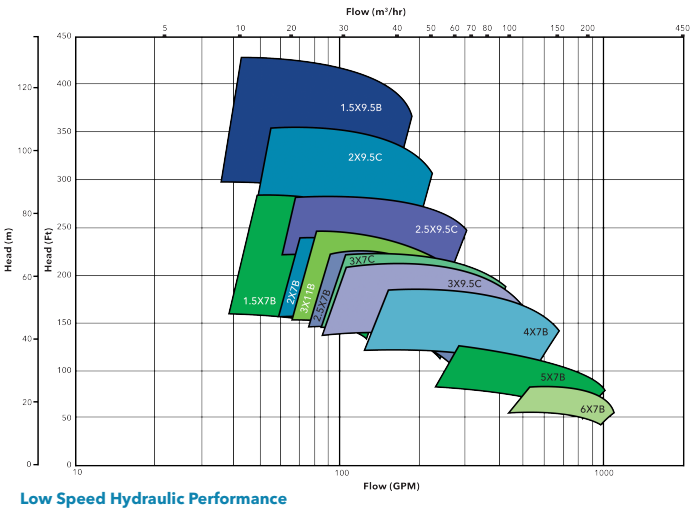

Low Speed Hydraulic Performance

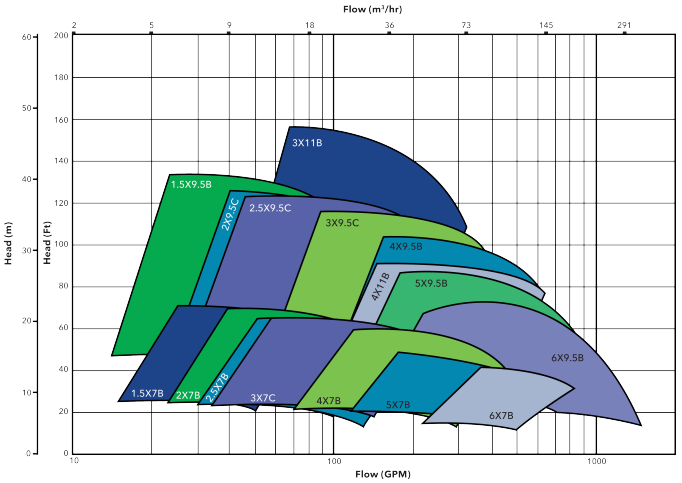

Learn more about e-80X Smart Pumps:

Xylem Product Cybersecurity - Xylem values your system security and the availability of your critical services. To learn more please visit: www.xylem.com/security.

xylem
Let’s Solve Water

Xylem Inc.
www.xylem.com/bellgossett

Xylem, Bell & Gossett and Hydrovar are registered trademarks of Xylem Inc. or one of its subsidiaries. MODBUS is a registered trademark of Schneider Electric USA, Inc. The Bluetooth word mark and logos are registered trademarks owned by Bluetooth SIG, Inc. and any use of such marks by Xylem Inc. or one of its subsidiaries is under license. All other trademarks or registered trademarks are the property of their respective owners.

© 2024 BG-e80SS-120081 R2 March 2024