Data Sheet
WDS-10063-06

Cordonel

Ultrasonic C&I water meter



- Advanced U0D0 capability: zero straight pipe requirements.
- LCD for consumption, flow, temperature, pressure (optional) and status information.
- NFC wireless interface for readout of the last volume reading.
- Optional pulse output with programmable weights and widths
- Removable measuring chamber for 6” and larger meters.
- 180 days of hourly consumption, pressure, and temperature data logging.
- Maintenance free.
- No accuracy degradation.
- Secure encrypted data transmission.
- Meets NFPA 13 and NFPA 24 Fire Service standards.

Cordonel® is an innovative ultrasonic C&I water meter with patented flow technology that measures low- to high-volume flow with unmatched accuracy. Equipped with pressure and temperature sensing, alarms, and data storage, it fills a critical need in commercial, industrial, and irrigation markets.

Superior accuracy

Cordonel’s patented flow rate technology ensures that every drop of water passes through one of its three individual measuring paths. Cordonel’s horizontal and vertical pipe orientations means no straight upstream and downstream pipe requirements; measurements are accurate even behind a 90-degree bend. With solid-state ultrasonic engineering and reliable readings over its 20-year battery life, Cordonel delivers accuracy unmatched in the industry.

Conformance to standards

The Cordonel Ultrasonic water meter meets and far exceeds the most recent revision of AWWA Standard C715 class I & II. Each meter is performance tested to ensure compliance. All Cordonel Ultrasonic water meters are NSF/ANSI Standard 61, Annex F and G approved latest standards. Fire Service use applications should be installed in accordance with NFPA 13 and NFPA 24, as applicable. All 1.5”-6” Cordonel meters are UL 327B Fire Service Certified.

Display

- Alarm triggered
- Low battery level
- TST — Hydraulic testing mode
- ⊕⊖ — Flow direction

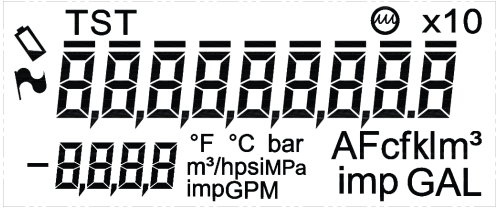

1.5” - 4”

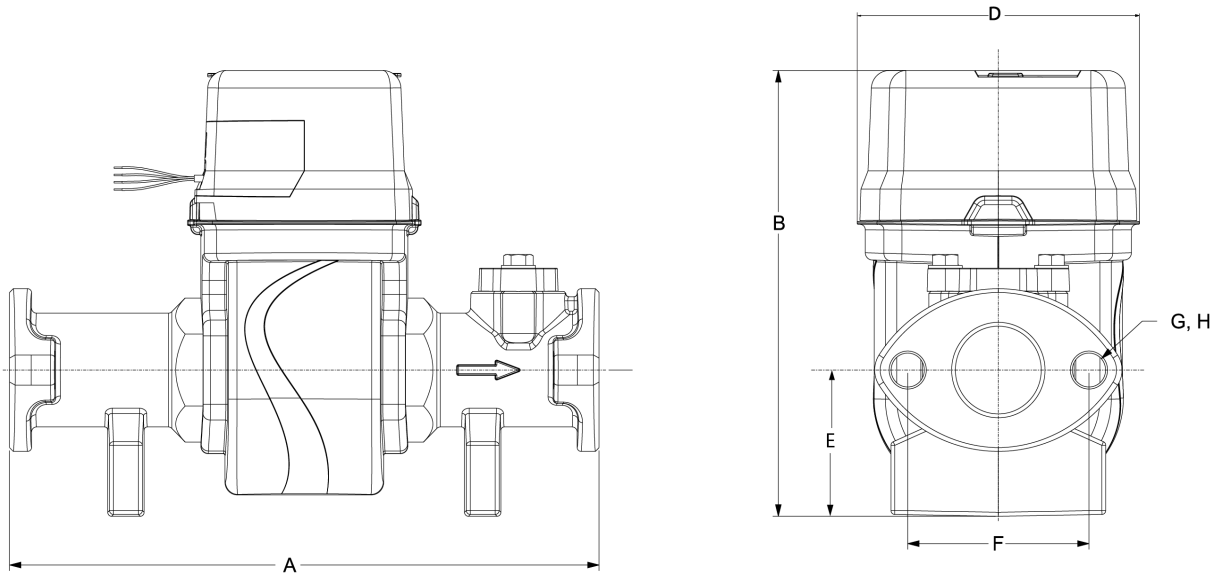

6”

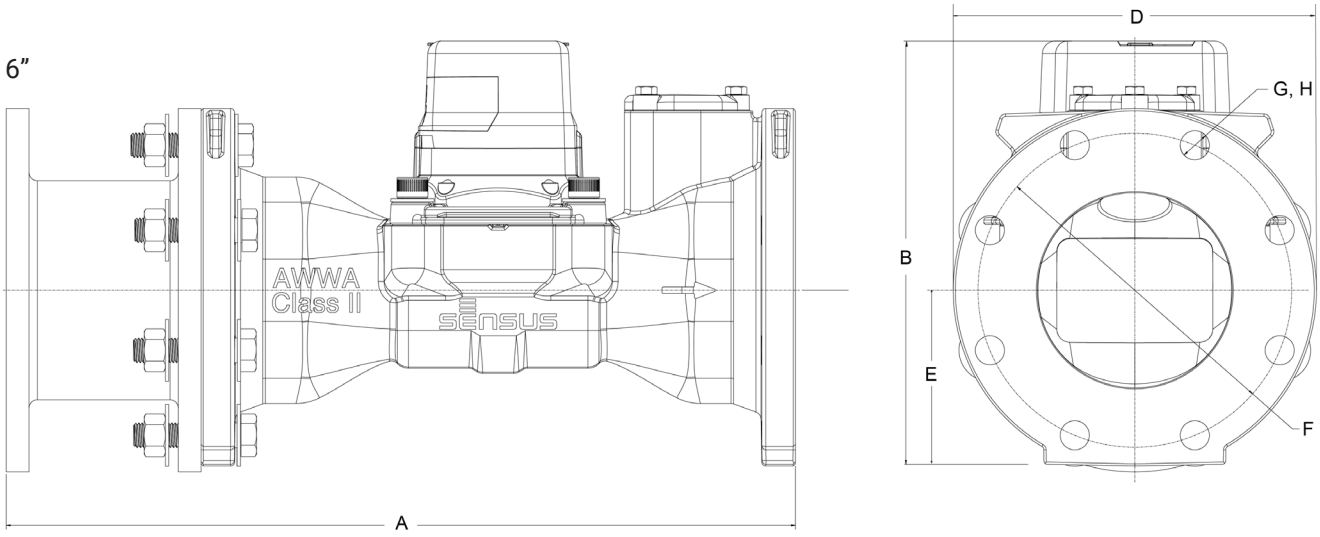

Dimensions and Weights

Size	A (lay length)	D (width)	B (Height)	E (Height to pipe axis)	F Bolt circle	G No. of bolts	H Bolt size	Net Weight
1.5” (DN 40 mm)	13” (330 mm)	6.22” (158 mm)	9.6” (244 mm)	3.15” (80 mm)	4” (102 mm)	2	5/8”	25.13 lb (11.4 kg)
2” (DN 50 mm)	10” (254 mm)	6.22” (158 mm)	9.6” (244 mm)	3.15” (80 mm)	4.5” (114 mm)	2	5/8”	23.81 lb (10.8 kg)
	15.25” (387 mm)							27.78 lb (12.6 kg)
	17” (432 mm)							28.89 lb (13.1 kg)
3” (DN 80 mm)	17” (432 mm)	7.87” (200 mm)	10.8” (275 mm)	3.74” (95 mm)	6” (152 mm)	4	5/8”	52.47 lb (23.8 kg)
	19” (483 mm)							54.90 lb (24.9 kg)
4” (DN 100 mm)	14” (355 mm)	9” (229 mm)	12.2” (310 mm)	4.37” (111 mm)	7.5” (191 mm)	8	5/8”	51 lb (23.2 kg)
	20” (508 mm)							74.96 lb (34.0 kg)
	23” (584 mm)							79.81 lb (36.2 kg)
6” (150 mm)	18” (457 mm)	11" (280 mm)	12.874"" (327 mm)"	5.31" (135 mm)	9.5” (241 mm)	8	3/4”	107 lb (48.5 kg)
	24” (610 mm)							137 lb (62.1 kg)
	27” (685 mm)							141 lb (64 kg)

Smart Alarms

Cordonel meters have many configurable smart alarms designed to protect your utility's investment, enhance customer service, and monitor/optimize distribution systems. These alarms include:

- Empty Pipe
  Detects the absence of water in the flow tube and sends an alert. Allows you to identify main breaks downstream and water shortages for quicker resolution to ensure water availability. This alarm can also indicate the water meter has been removed from service, or notify you of potential tamper.
- Customer Leak
  Detect continual consumption of water over a period of time to indicate downstream leaks. This protects your utility, infrastructure and customers through alarm notifications that can reduce water loss and leak adjustment costs.
- Low Battery
  Replace your meters before they stop recording consumption through alerts indicating battery capacity to the meter or valve is running low.
- Reverse Flow
  Keep untreated water from re-entering your distribution system and deter tampering attempts through an alarm triggered when reverse flow is detected at the meter.
- High Flow
  Detect broken pipes and reduce property damage through an alert triggered by the detection of excessive flow rates.
- Pressure
  Get alerted when water pressure exceeds or falls below the pressure threshold to prevent potential disruptions of service. Standard in 3" and above; optional in 1.5" and 2".
- Temperature
  Get alerted when water temperature exceeds or falls below the temperature threshold so you can take action to better protect your meter and water network assets.

Specifications

Service	Measurement of potable and reclaim water; IP68 Rated	
Fire Service Details	All 1.5"-6" Cordonel meters are UL 327B Fire Service Rated. Fire service application installation must be performed in accordance with NFPA 13 and NFPA 24 standards, as applicable	
Temperature Ranges	Water operating: 33 °F (0.55 °C) to 122 °F (50 °C) Environmental: 14 °F (-10 °C) to 140 °F (60 °C)"	
Starting Flow	1.5" (DN 40 mm): 0.05 gpm (0.012 m³/h) 2" (DN 50 mm): 0.05 gpm (0.012 m³/h) 3" (DN 80 mm): 0.15 gpm (0.033 m³/h)	4" (DN 100 mm): 0.24 gpm (0.054 m³/h) 6" (DN 150 mm): 0.48 gpm (0.109 m³/hr)
Low Flow (±3%)	1.5" (DN 40 mm): 0.18 gpm (0.04 m³/hr) 2" (DN 50 mm): 0.18 gpm (0.04 m³/hr) 3" (DN 80 mm): 0.44 gpm (0.10 m³/hr)	4" (DN 100 mm): 0.70 gpm (0.16m³/hr) 6" (DN 150 mm): 1.5 gpm (0.34 m³/hr)
Normal Water Operating Flow Range (±1.5%)	1.5" (DN 40 mm): 0.26 to 220 gpm (0.06 to 50 m³/hr) 2" (DN 50 mm): 0.26 to 220 gpm (0.06 to 50 m³/hr) 3" (DN 80 mm): 0.70 to 550 gpm (0.16 to 125 m³/hr)	4" (DN 100 mm): 1.14 to 1000 gpm (0.26 to 227 m³/hr) 6" (DN 150 mm): 2.4 - 2500 gpm (0.55 - 567.8 m³/hr)
Maximum Continuous Operation	1.5" (DN 40 mm): 220 gpm (50 m³/hr) 2" (DN 50 mm): 220 gpm (50 m³/hr) 3" (DN 80 mm): 550 gpm (125 m³/hr)	4" (DN 100 mm): 1000 gpm (227 m³/hr) 6" (DN 150 mm): 2500 gpm (567.8 m³/hr)
Maximum Intermittent Operation	1.5" (DN 40 mm): 220 gpm (50 m³/hr) 2" (DN 50 mm): 220 gpm (50 m³/hr) 3" (DN 80 mm): 550 gpm (125 m³/hr)	4" (DN 100 mm): 1000 gpm (227 m³/hr) 6" (DN 150 mm): 2500 gpm (567.8 m³/hr)
Pressure Loss	1.5" (DN 40 mm): 6.9 psi @ 160 gpm (0.48 bar @ 36 m³/hr) 2" (DN 50 mm): 4.3 psi @ 160 gpm (0.30 bar @ 36 m³/hr) 3" (DN 80 mm): 3.2 psi @ 400 gpm (0.22 bar @ 91 m³/hr)	4" (DN 100 mm): 6.4 psi @ 800 gpm (0.44 bar @ 182 m³/hr) 6" (DN 150 mm): 5.5 psi @ 1600 gpm (0.38 bar @ 363 m³/hr)
UL Fire Certification	1.5" (DN 40 mm): 3 to 100 gpm 2" (DN 50 mm): 0.282 to 250 gpm 3" (DN 80 mm): 0.704 to 650 gpm	4" (DN 100 mm): 1.127 to 1000 gpm 6" (DN 150 mm): 2.450 to 2500 gpm
Maximum Operating Pressure	175 PSI (12.07 bar)	
Register	Fully electronic sealed register with programmable registration (Gal. /Cu.Ft./ Cu. Mtr. / Imp. Gal. / Acre Ft.) Programmable	
Test Ports	Stainless steel with optional NPT riser	
Flange Connections	U.S. ANSI B16.1 / AWWA Class 125	
NSF Approved Materials	Maincase: Epoxy coated ductile iron Measuring Transducers: High grade polymer Inner tube: High grade polymer, stainless steel	

Typical Headloss Curve

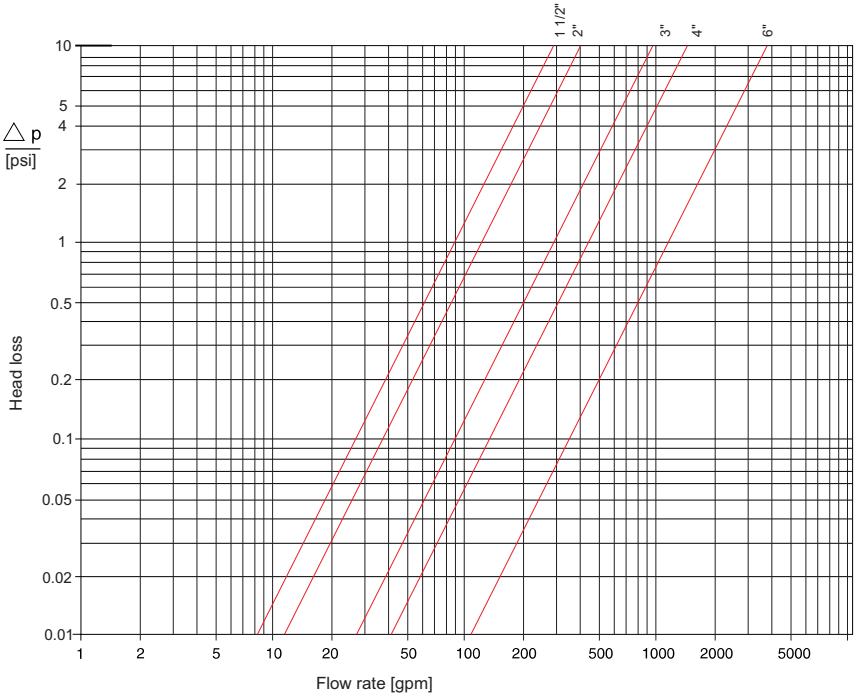

Xylem
639 Davis Drive
Morrisville, NC 27560

Tel +1 800.638.3745
xylem.com

xylem.com/sensus

© 2026 Xylem Inc. or its affiliate. All rights reserved. Cordonel is a registered trademark of Xylem or one of its subsidiaries.

WDS-10063-06