

VX MINI RANGE

SPECTRA 3 LP45 MEMBRANE

INSTALLATION, OPERATION & MAINTENANCE MANUAL

Document History:

Issue	Creation Date	Created By
1	21/06/2021	James Ellis

Manual Contents

VX MINI RANGE MANUAL 1

Document History: 2

Manual Contents 3

Health & Safety 6

Health and Safety Information 6

Introduction 8

An Introduction to UV Disinfection Systems 8

What is Ultraviolet (UV) Light? 8

How does UV Disinfection Work? 8

Safety Advantages of Evoqua UV Technology Disinfection 8

Terminology 9

Installation Guidelines 11

General Installation Guidelines 11

UV Chamber 11

UV Control Panel Installation Guidelines 16

VX/VT Installation, Commissioning and Calibration 17

Specific Installation Guidelines 17

Environmental Conditions 17

Chamber Installation Orientation 17

Special Considerations 20

Vertical Mounting 21

Cable Recommendations 22

Panel Supply Loads 25

Installation Checklists 26

Commissioning 28

Commissioning Procedure Checklist 28

UV Commission Work Sheet 30

UV Sensor Calibration 31

VX/VT Maintenance & Spares 32

Maintenance Schedule 32

Maintenance Log 32

Performance Monitoring 32

UV Lamp 32

Quartz Cleaning and Replacement 32

Seals 32

Control panel 32

Twistlok+ System Maintenance 33
UV Sensor Maintenance 35
Automatic Wiper System Maintenance 36
Spare Parts 41
General Assembly 41
Lamp & Quartz Assembly 42
FUV Sensor Housing Assembly 43
Automatic Wiper Drive Assembly 44
Automatic Wiper Carriage Assembly – Single Lamp 45
Automatic Wiper Carriage Assembly - Multi-Lamp 46
Maintenance Spares List 47
Spectra 3 Membrane Operation V2 50
Spectra Membrane Control System 50
Components 50
Start-up Sequence 57
Spectra Operation 58
Main Screens 58
Fault Screens 61
Operator Menu Screens 63
Setup Menu Screens 64
Navigating the Setup Screen 65
Setup Menu - Parameter Descriptions 66
Integration 76
Analogue Inputs 76
Analogue Outputs 76
Digital Inputs 77
Remote Start/Stop 77
Digital Outputs 78
Open Valve 78
Temperature Alarm* 78
MODBUS Communication 79
Introduction 79
Supported Interface 79
Physical Connection 80
Data Transmission 82
Message Structure 84
Data Storage 86
Full Register Map 86

Trouble Shooting 91

Health & Safety

Health and Safety Information

Only suitably qualified personnel should operate/maintain the system - always follow safe working practices and do **NOT** take risks.
If in doubt always **ASK**, or for further information visit our website: www.Evoqua.com

	**All personnel involved in the installation, maintenance and operation of the UV system should read the relevant manual.**
	**Electrical Safety** **WARNING: Always ensure electrical plant or equipment is isolated before carrying out maintenance.**
	**Electrical Ground / Earth** **WARNING: All equipment must be Grounded / Earthed.**
	**Hot Temperature** **CAUTION: Chamber can be hot.** **Allow 15 minutes for lamps and other components to cool down before removal.**
	**Process Isolation - Fluid** **WARNING: Always fully isolate the system from the process before carrying out maintenance.** **DANGER: Failure to follow the correct procedures can cause serious injury or death due to forcible ejection of materials from the UV chamber.**
	**Process Isolation - Wiper** **CAUTION: Contact with moving parts can cause injury, for example trap fingers, clothing may become caught in moving parts of machinery, drawing in operatives.**
	**Ultraviolet Light** **WARNING: Do not expose skin or eyes to ultraviolet light.** **CAUTION: Do not touch lamps immediately after operation. Allow 15 minutes for lamps and other components to cool down.**

	**Quartz Components** **CAUTION: Handle quartz components with care to avoid breakages.**
	**Mercury - Lamp Breakage** **CAUTION: Lamps contain Mercury take care to avoid breakages. If a breakage occurs follow mercury spillage procedure below.**
	**Lamp Recycling** **Always recycle UV lamps properly and safely.**

Mercury Spillage	
Anticipate this event by collecting together a spill kit. Spill kits are commercially available; however most contain the following components:	1. Latex barrier gloves 2. Sealable plastic bag 3. Soft cloth, or cardboard rectangle 4. Syringe or pipette 5. Small brush, barrier foam or duct tape 6. Powdered Sulphur.
Mercury spillage procedure:	1. Put on Latex gloves 2. Collect quartz pieces, place in cloth in sealed bag. Mark bag as “sharp hazard” 3. Locate mercury ball. Use brush to aggregate smaller balls into large ball 4. Use syringe to draw up mercury bead. Transfer mercury onto paper towel, place inside sealed bag. Mark bag as “mercury hazard” 5. Use barrier foam or duct tape to collect remains of mercury - dispose of as detailed in point 4. 6. Consult site regulations regarding notification of a mercury spill. A UV lamp contains a maximum of 300 mg of mercury 7. Powdered Sulphur is optional - it can make collection of very small mercury balls easier.

Introduction

An Introduction to UV Disinfection Systems

Unlike chemical approaches to water disinfection, Ultra Violet (UV) light provides a rapid and effective method to disinfect water and other liquids.

What is Ultraviolet (UV) Light?

UV light is a form of light that is invisible to the human eye, and is classed as a non-ionising (or non-radioactive) radiation. It occupies the portion of the electromagnetic spectrum between X-rays and visible light.

How does UV Disinfection Work?

A unique characteristic of UV light is that a specific range of its wavelengths (those between 200 and 300 nm [billionths of a metre]) are categorized as germicidal – meaning that UV light damages the DNA and RNA of microorganisms and prevents them from causing infection. This capability has allowed widespread adoption of UV light as an environmentally friendly, chemical-free, and highly effective way to disinfect liquids.

Safety Advantages of Evoqua UV Technology Disinfection

- UV is a chemical-free process that adds nothing to the water except UV light.
- UV requires no transportation, storage or handling of toxic or corrosive chemicals – a safety benefit for plant operators and the surrounding community.
- UV treatment creates no carcinogenic disinfection by-products that could adversely affect the quality of the treated water.
- UV is highly effective at inactivating a broad range of microorganisms including chlorine-resistant pathogens like Cryptosporidium and Giardia.
- UV can be used (alone or in conjunction with hydrogen peroxide) to break down toxic chemical contaminants while at the same time performing disinfection of the treated water.

Evoqua UV Technology Disinfection Systems

The main features of the Evoqua UV system are:

- UV Reactor: stainless steel reactor inside which water is exposed to UV light for disinfection.
- UV Lamps: emit high-intensity UV light; housed inside chamber and protected by quartz sleeve.
- Control Panel: contains electronics for system; controlled through user interface on outside.
- Wiper: motorised system used to clean lamp sleeves.
- UV Sensor: monitors UV intensity inside chamber and feeds readings back to control panel.
- Temperature Sensor: monitors temperature of reactor to protect people and equipment if the water flow is interrupted unexpectedly.
- Note: not all systems are fitted with Wiper, UV Sensor and Temperature Sensor.

Terminology

The following terminology is used throughout this Manual:

Term	Description
Control Panel	Contains control and power electronics for UV system
ATUV-1220	I/O module
AT-463	4-20mA UV sensor used to measure the UV intensity and so report on the performance of the system.
AT-900	4-20mA Validated UV Sensor
Bank	The term used to describe 2 lamps running in series powered by a single power supply
Isolator (MCCB)	Disconnects system from power supply
MCB	Miniature circuit breaker
Electronic Ballast	Power supply used to control the starting voltage of the UV lamp and regulate the operating current
Wiper	Cleaning system for UV Lamp sleeves
Spectra	Electronic control systems used for monitoring and control of UV treatment
UV Sensor	Component for continuous measurement of the UV-C intensity inside the reactor
UV Reactor	Comprising a single chamber in which water is treated by UV irradiation, and the associated inlet and outlet valves, components and instruments
Restrike Timer	Timer used by the control system to allow the lamps to cool after stopping, during this time the lamps are inhibited from starting
Start-up Mode	Period between switch on of the UV system and running mode

Term	Description
Running Mode	When all lamps are struck and the dose reading has exceeded the minimum Dose level
Lamp Power	Electrical Power rating of UV Lamp
Dose	Calculation of the amount of UV treatment the water is receiving, based on UV intensity and flow rate
UV Intensity	A measurement of the strength of the Ultraviolet (UV) radiation given off from the UV lamps
UVC	A region in the electromagnetic spectrum. Wavelength range 200-280 nm
UVT	Ultraviolet transmissivity of the water undergoing treatment
Validated	Certified envelope of operation of UV Reactor, comprising for example flow, UVT

Installation Guidelines

General Installation Guidelines

The guidelines in this section are designed to assist in the installation of an Ultraviolet Disinfection system into a typical plant. The recommendations below are **NOT** definitive. Depending on the installation, it may be necessary to install contrary to specific recommendations. If at any stage you are unsure as to any aspect of these instructions, consult with a specialist installation contractor. Please also make use of the Installation and Commissioning Checklists later in this manual section.

Please be aware:

- The manufacturer cannot accept responsibility for any installation carried out by other parties.
- When planning or executing any installation ensure all local Health & Safety Regulations are followed, local codes complied with and implement all appropriate risk assessments.
- Always allow a footprint around the chamber and control panel to allow safe work and access.

UV Chamber

Location of UV Chamber – Process Considerations

1. Unless there are other process considerations the UV unit should be located as close to the point of use as possible.
2. The UV system is normally installed after all other physical or conventional water treatment equipment (filters, softeners, de-mineralization etc.). The effectiveness of UV treatment is dependent upon water clarity and removal of the majority of suspended solids will reduce fouling of quartz sleeves and thimbles. However, for certain process requirements and considerations, the UV unit may need to be installed 'up front' and before some or all of the treatment equipment.
3. If chemical dosing is utilized to provide a residual, this should be installed downstream of the UV chamber. This will reduce chemical reduction by the UV system and will prolong the chamber life.

Location of UV Chamber – Mechanical Considerations

1. Allow sufficient room for removal and replacement of lamps, quartz sleeves / thimbles and wiper components (where fitted).
2. Ensure the UV Chamber location does not prevent safe maintenance of existing equipment.
3. Ensure that all equipment and pipe work will be adequately supported when installed. The UV chamber should not be used to support the pipe work, or else this may damage the UV chamber.
4. Avoid locating chambers and panels under dripping pipe work or chemical equipment and avoid storing chemicals that can lead to corrosion of system components, close to the UV equipment.
5. To minimize flow interruption and where process considerations allow it, a by-pass should be installed around the UV chamber.
6. Plan a drainage route for the equipment to the plant room main drain. It is good practice to install lockable ball valves on the drain and vent to aid maintenance.
7. The preferred material for the connecting pipework is stainless steel (either 304 or 316L grade), although straight pipe sections of uPVC may be connected direct onto the UV chamber, provided they are a minimum Class 'E' (BS 3505). These materials should be used for a minimum straight section of 1000 mm, if the pipe is 6" or greater in diameter. If the pipe is less than 6" in diameter a minimum straight section of 500 mm should be used. ABS should not be used. If plastic pipe is used, the same size connection should be used for the connecting pipework. **Reducing pipework connection size directly onto the UV chamber is not recommended!**
8. If the pipe is 6" or greater in diameter, any elbows within 1000 mm of the UV chamber must be stainless steel. If the pipe is less than 6" in diameter, any elbows within 500 mm of the UV chamber must be stainless steel
9. If the pipe is 6" or greater in diameter, any valves within 1000 mm of the UV chamber should have a stainless-steel disc (or other metal) and should not be coated with a polymer material. If the pipe is less than 6" in diameter, any valves within 500 mm of the UV chamber should have a stainless-steel disc (or other metal) and should not be coated with a polymer material.
10. Do not install in direct sunlight and protect from extremes environments (Weather, High Humidity, High or Low Temperatures).
11. Where cable lengths exceed the distance between the control panel and UV chamber, ensure these are not coiled as this could create un-wanted noise on the signal cables, and in the case of lamp cables, a voltage drop may result. Please contact Evoqua UV for further information.

Location of UV Chamber – Airlocks/ Water Hammer

1. Install the pipe work in such a way that the UV Chamber always remains flooded. If the chamber drains down, the mechanical shock when full flow is regained may damage the quartz components
2. If it is not possible to ensure the chamber remains flooded due to its location, air release and check valves can prevent emptying and draining of the system. Discuss this with your installer
3. The chamber should not be allowed to drain when not in use as this can damage internal component's
4. Avoid excessive water hammer as this can damage quartz components. Avoid locating the chamber close to the outlet side of a pump. If this is unavoidable, installing a 'soft start' on the pump can reduce the chance of quartz breakage's
5. On installations where the chamber and / or pipe work cannot remain flooded, a bypass should be installed where it can be easily operated. This should be opened when flow is restarted otherwise lamp and quartz breakage may occur. (Flow restarting can mean the pump starting, a backwash cycle or movement of another valve).

Location of UV Chamber – Special Considerations for Drinking Water Treatment Plants

1. As per the UVDGM guidelines, it is a requirement for all Validated systems to install a straight piece of pipe with a minimum of 5 pipe diameters upstream of the chamber to ensure good flow characteristics through the chamber, as shown in the example installation diagrams on the following page.

Chamber Orientation

1. Ensure the temperature probe (if fitted) is located on the top of the UV system.
2. Ensure the air vent (if fitted) is located on top of the UV system.
3. Install the system so that both the temperature probe and the UV monitor can be installed and maintained.
4. Ensure the lamps and sleeves can be removed, and service access is considered for the UV system and adjacent equipment.
5. UV lamps should be installed horizontally for both vertical pipe and horizontal pipe configurations, unless otherwise specified.

Cross Flow Chamber Installation Example

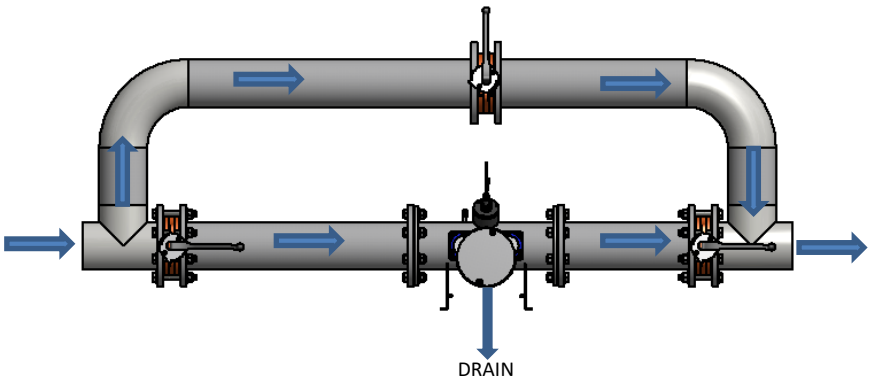

Note: Chamber can be positioned vertically ensuring the lamps remain horizontal

Axial Flow Chamber Installation Example

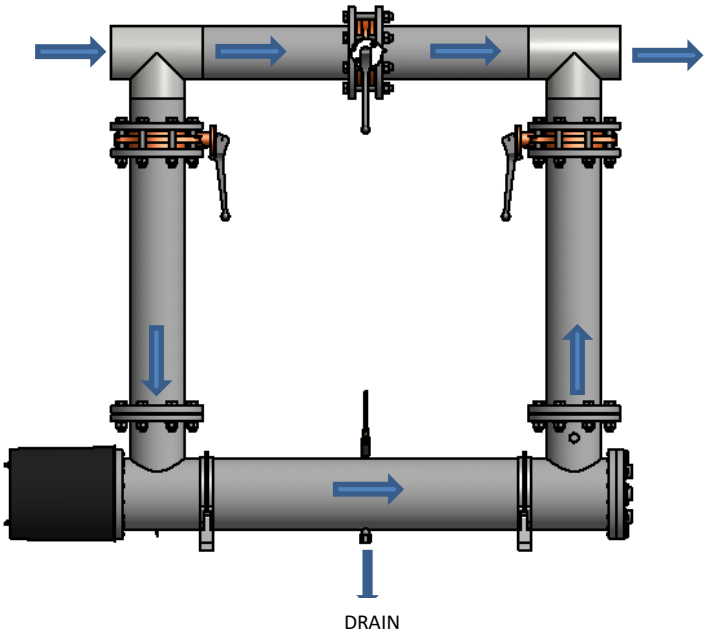

Temporary Basket Strainer Installation (Optional)

1. These should be located after the UV unit. Where the temporary basket strainer is of a larger micron rating than the upstream filtration then regular access to the strainer should not be required. However the strainer should be accessible if necessary.
2. We recommend installing this device after the UV system in a spool piece, which can be removed for maintenance in the orientation shown in the diagram below. If the UV chamber is mounted in a vertical section of pipe work, it is recommended that a point of access be provided to the pipe section below the chamber, in order to remove any quartz shards which have dropped through it.

Diagram of Strainer Installation

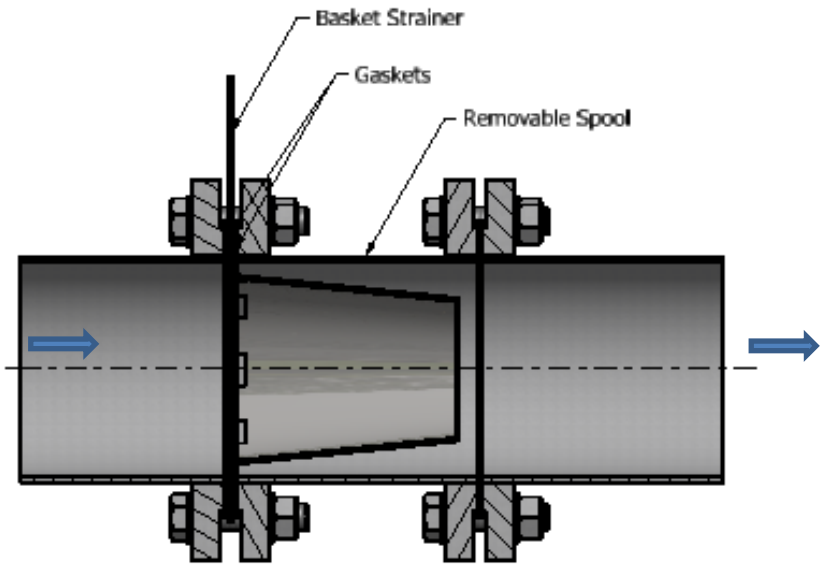

UV Control Panel Installation Guidelines

1. Complete the Installation and Commissioning Checklists later in this manual section to ensure proper installation and safe work.
2. Locate the panel as close as possible to the chamber

Note: The control panels vary in size & weight (<100kg), recommended 2-person handling (lifting) when moving or installing the control panel. Lifting eyes to be used where provided.

3. Ensure that the floor/wall structure is able to withstand the weight of the enclosure. For wall mounted panels, secure the enclosures to the mounting surface with hardware as appropriate for the application used using the 4 x mounting lugs provided.
4. Ensure the correct supply is available on site and the correct supply cable is used. If the correct voltage is not available, a Step Up / Step Down transformer may be needed - please contact your supplier for details.
5. Ensure the correct circuit breaker size and type is available for the unit (see the Cable Recommendations subsection of this manual). If the suggested breaker is installed, then sufficient discrimination should be ensured.
6. Ensure that the UV chamber and the control panel are correctly earthed / grounded – an Earth / Ground point and cable is fitted & supplied to all UV chambers.
7. The panel must be firmly mounted against a vibration free wall or suitable supporting frame.
8. Ensure panel fans (if fitted) are not obstructed. It is recommended to change or clean the filter media once construction on a project has finished.
9. Do not install in direct sunlight and protect from extremes of environment (Weather, High Humidity, High or Low Temperatures).
10. Install control panel display at eye level.
11. Do not locate the control panel in areas where it may be subjected to chemical or water leaks.
12. If the panel is floor mounted ensure that the panel is not located in a potential flood area.
13. Ensure the correct control panel is matched with the appropriate chamber. The chamber can be identified by an engraved serial number located on a fixed flange of the chamber. The panel can be identified by the label on the inside of the door. These two codes should match exactly (e.g. C12345-A).
14. For lamp cables that require earthing, ensure the cable braiding has been screened or exposed and connected/clamped into each lamp earth terminal/busbar (if provided). Refer to images below.

NOTE: For cables being clamped onto the busbar using the shield connection clamps provided, ensure the exposed tinned copper braid on the lamp cable is clamped (**DO NOT OVER TIGHTEN**)

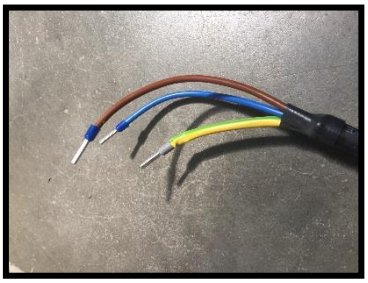

Screened Lamp Cable (for connecting into Terminals)



Screened Lamp Cable (for Clamping on Busbar)

VX/VT Installation, Commissioning and Calibration

Specific Installation Guidelines

Environmental Conditions

Unless otherwise agreed the following environmental conditions should be met:

Condition	Range
Ambient Temperature	0 – 40 °C (32 – 104 °F)
Relative Humidity	< 90%

Chamber Installation Orientation

The VX/VT chambers can be installed in a variety of orientations. This is detailed in the following procedures.

IMPORTANT: It is highly advised that the chamber is fully supported when carrying out the following procedures.

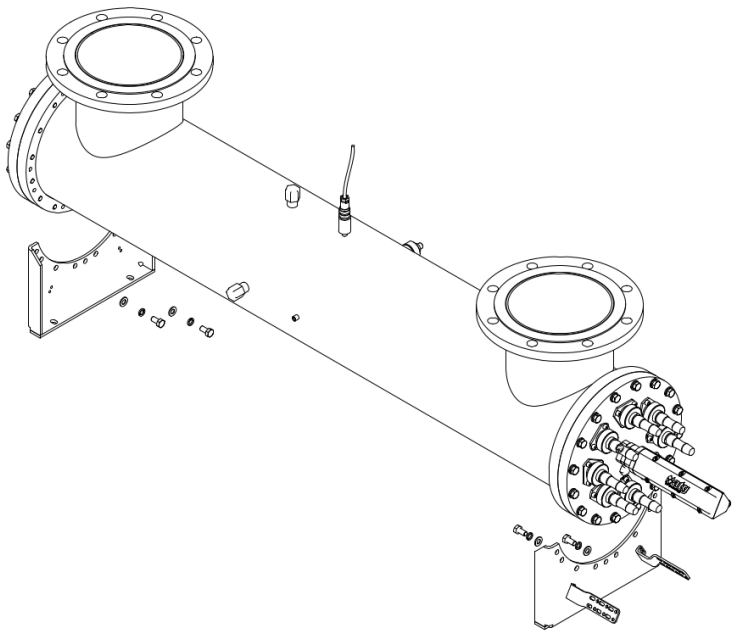

To change the orientation of the chamber, the chamber feet will need to be removed from the chamber. This is done by removing the bolts, washers & spring washers from the rear of the chamber feet.

U-Type Orientation

U-type orientations have the inlet & outlet connections positioned on the same side & can be installed in 4 different orientations:

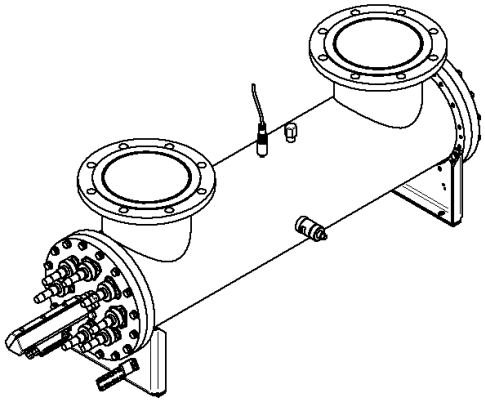	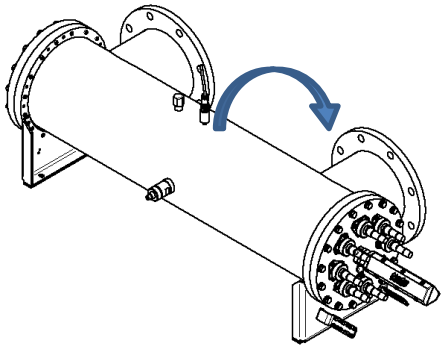
U-Type 1 This is a standard Orientation of the Chamber (take note of the UV Sensor position).	**U-Type 2**: Taking orientation U-Type 1, this requires removing the chamber feet & rotating the chamber inlet/outlet to a 3'o position. Re-positioning of the Temperature sensor & UV sensor will be required to ensure they are in the top & side positions respectively.
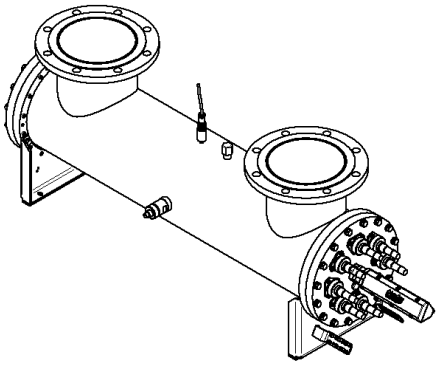	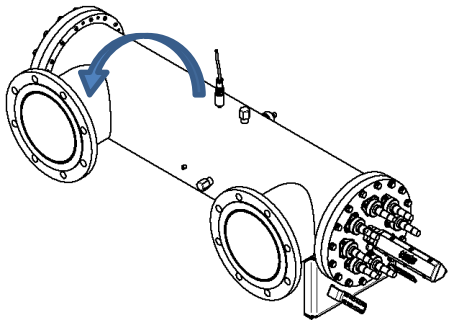
U-Type 3: This is a standard Orientation of the Chamber (take note of the UV Sensor position).	**U-Type 4:** Taking orientation U-Type 3, this requires removing the chamber feet & rotating the chamber inlet/outlet to a 9'o position. Re-positioning of the Temperature sensor & UV sensor will be required to ensure they are in the top & side positions respectively.

IMPORTANT: MAXI's chambers should only be positioned in Orientation's U-Type 1 & U-Type 3
Mounting feet should **not** be installed on the same side as the inlet/outlet connections

Z-Type Orientation

Z-type orientations have the inlet & outlet connections positioned on opposite sides of the chamber body & can be installed in 4 different orientations:

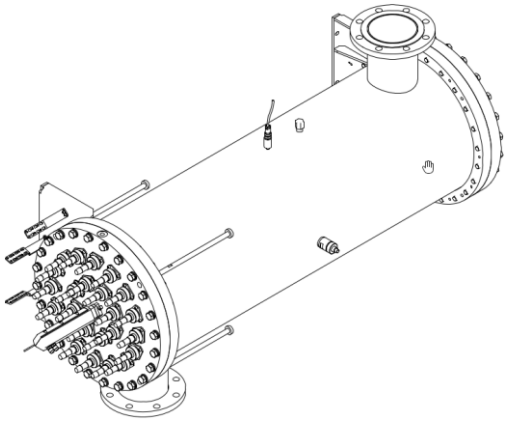	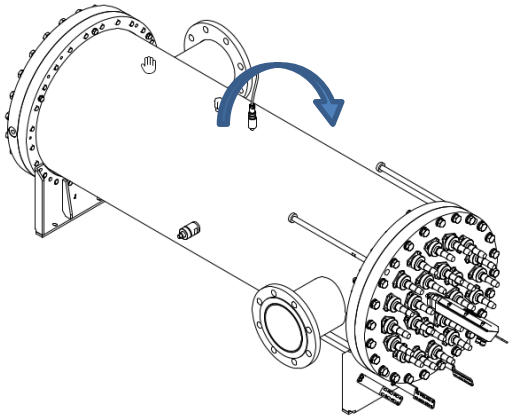
Z-Type 1 This is a standard Orientation of the Chamber (take note of the UV Sensor position).	**Z-Type 2**: Taking orientation Z-Type 1, this requires removing the chamber feet & rotating the chamber 90˚ clockwise. Re-positioning of the Temperature sensor & UV sensor will be required to ensure they are in the top & side positions respectively.
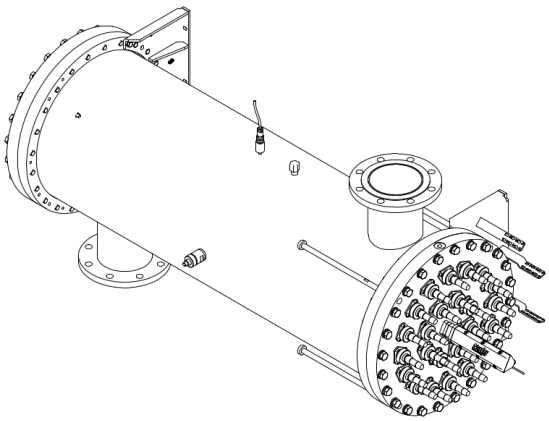	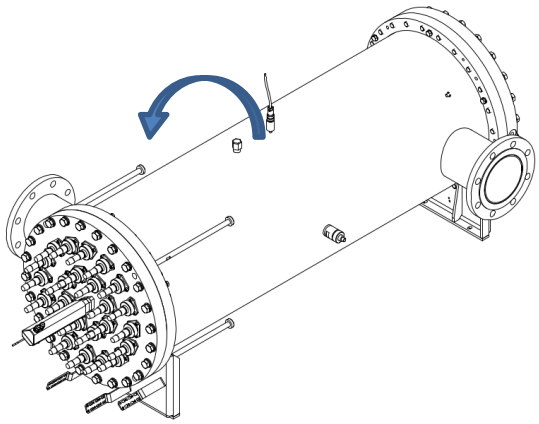
Z-Type 3: This is a standard Orientation of the Chamber (take note of the UV Sensor position).	**Z-Type 4:** Taking orientation Z-Type 3, this requires removing the chamber feet & rotating the chamber 90˚ anti-clockwise. Re-positioning of the Temperature sensor & UV sensor will be required to ensure they are in the top & side positions respectively.

IMPORTANT: MAXI chambers should only be positioned in Orientation's Z-Type 1 & Z-Type 3
Mounting feet should **not** be installed on the same side as the inlet/outlet connections

Special Considerations

For Orientation U-Type 2 & U-Type 4, take note of the below flange orientation requirements for the VX-1200, VX-1340, VX-245, VX-2200 & VX-2340. As well as rotating the chamber, the flange & associated components will need rotating also.

VX-1200-4 & VX-1340-4	
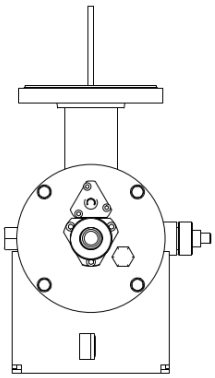	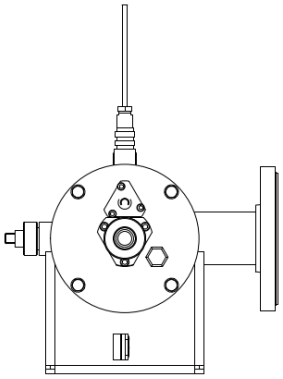
Chamber delivered in the standard oreinetation (U-Type 1 or U-Type 3).	When rotating the chamber, the wiper mechanism will need to remain in the 12'o clock position. This will require repositioning the lamp flange & accociated componenents. For more details refer to the Maintenance Section of the Manual. (These procedures only apply if a Wiper is fitted)
VX-2200-6 & VX-2340-6	
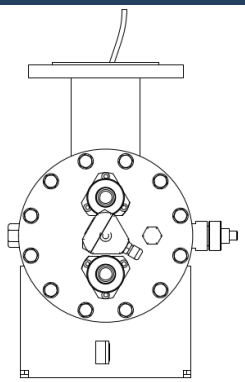	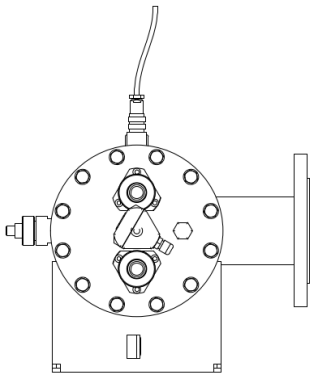
Chamber delivered in the standard oreinetation (U-Type 1 or U-Type 3).	When rotating the chamber, the lamps will need to remain in the 12' & 6'o clock position to ensure the UV sensor is pointing between both lamps. This will require repositioning the lamp flange & accociated componenents. For more details refer to the Maintenance Section of th Manual.

Vertical Mounting

Some VX chambers can be installed in the vertical position. Take note of the lamp position/s – access to the lamp connections should always be from the top. Drain/Vents provided on the end flanges.

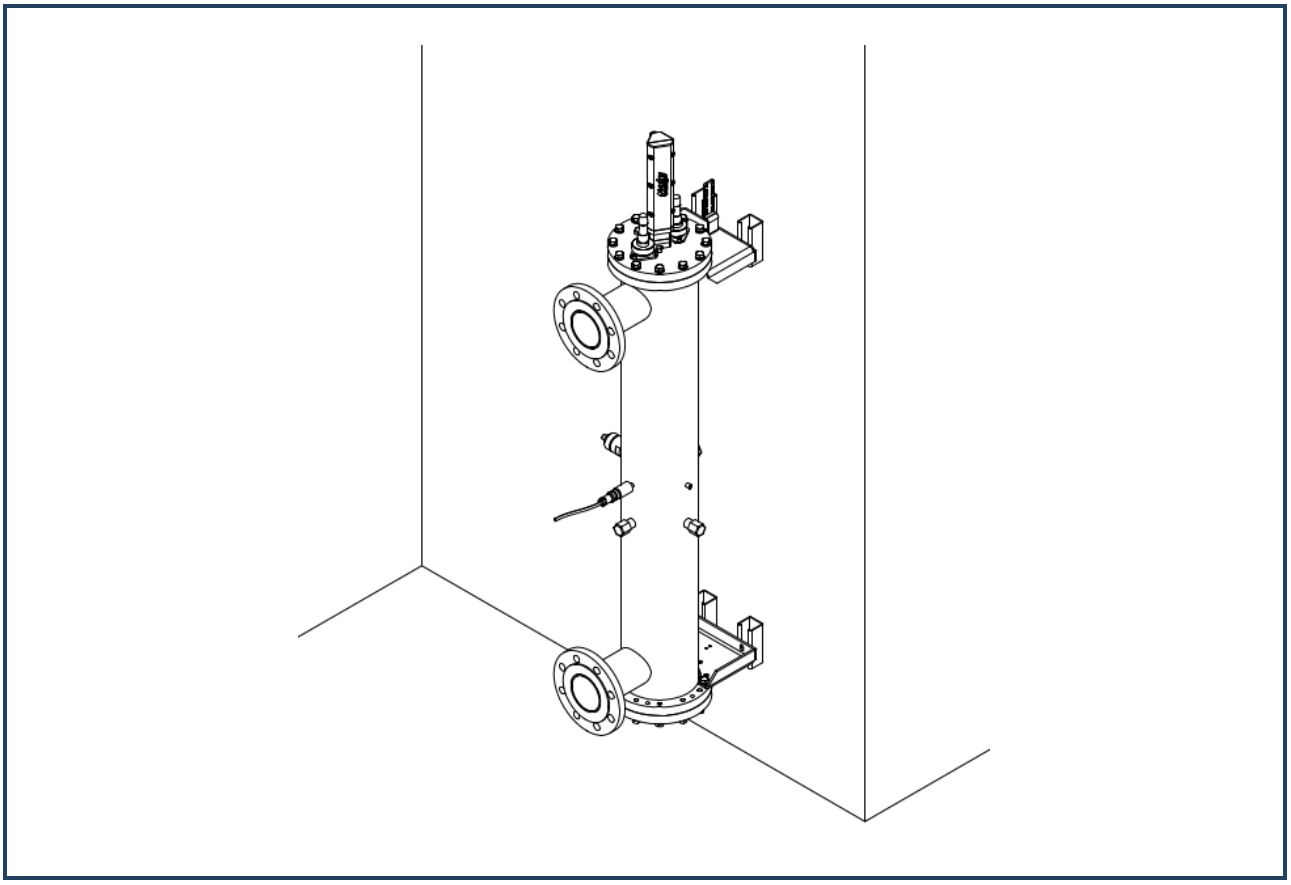

IMPORTANT: Only the 45W & 200W systems can be installed vertically.

Cable Recommendations

Below are recommendations for cable/circuit breaker sizes:

- Un-bunched installed in free air on perforated cable tray
- Installed in an ambient temperature of 0…40ºC
- Maximum cable length of 25m

If there are any other specifications that are in place that does not meet these criteria, please contact Evoqua UV for further information.

Model	No. of Lamps	Lamp Power	Cable to Panel from Distribution	Breaker in Distribution Panel
VX-145-*	1	45W	1.5mm^{2}c.s.a., 600/1000V, 3-Core cable (L, N & E) Steel Wire Armour Cable with Weatherproof Gland	4Amp Type “D” Circuit Breaker
VX-245-6	2	45W	1.5mm^{2}c.s.a., 600/1000V, 3-Core cable (L, N & E) Steel Wire Armour Cable with Weatherproof Gland	4Amp Type “D” Circuit Breaker
VX-1200-4	1	200W	1.5mm^{2}c.s.a., 600/1000V, 3-Core cable (L, N & E) Steel Wire Armour Cable with Weatherproof Gland	10Amp Type “D” Circuit Breaker
VX-2200-6	2	200W	1.5mm^{2}c.s.a., 600/1000V, 3-Core cable (L, N & E) Steel Wire Armour Cable with Weatherproof Gland	16Amp Type “D” Circuit Breaker
VX-4200-8	4	200W	2.5mm^{2}c.s.a., 600/1000V, 3-Core cable (L, N & E) Steel Wire Armour Cable with Weatherproof Gland	20Amp Type “D” Circuit Breaker
VX-8200-10	8	200W	2.5mm^{2}c.s.a., 600/1000V, 3-Core cable (L, N & E) Steel Wire Armour Cable with Weatherproof Gland	25Amp Type “D” Circuit Breaker
VX-1340-4	1	340W	1.5mm^{2}c.s.a., 600/1000V, 3-Core cable (L, N & E) Steel Wire Armour Cable with Weatherproof Gland	10Amp Type “D” Circuit Breaker

Model	No. of Lamps	Lamp Power	Cable to Panel from Distribution	Breaker in Distribution Panel
VX-2340-6	2	340W	1.5mm^{2}c.s.a., 600/1000V, 3-Core cable (L, N & E) Steel Wire Armour Cable with Weatherproof Gland	16Amp Type “D” Circuit Breaker
VX-4340-8	4	340W	2.5mm^{2}c.s.a., 600/1000V, 3-Core cable (L, N & E) Steel Wire Armour Cable with Weatherproof Gland	20Amp Type “D” Circuit Breaker
VX-8340-10	8	340W	2.5mm^{2}c.s.a., 600/1000V, 3-Core cable (L, N & E) Steel Wire Armour Cable with Weatherproof Gland	25Amp Type “D” Circuit Breaker
VT-4300-6	4	300W	2.5mm^{2}c.s.a., 600/1000V, 3-Core cable (L, N & E) Steel Wire Armour Cable with Weatherproof Gland	20Amp Type “D” Circuit Breaker
VT-8300-8	8	300W	2.5mm^{2}c.s.a., 600/1000V, 3-Core cable (L, N & E) Steel Wire Armour Cable with Weatherproof Gland	25Amp Type “D” Circuit Breaker

Model	No. of Lamps	Lamp Power	Cable to Panel from Distribution	Breaker in Distribution Panel				
				3ph + N (380-440V)	3ph (380-440V)	3ph (480V)	3ph (600V)	3ph (690V)
VX-12340-12	12	340W	4.0 mm^2c.s.a., 600/1000V, 3-Core cable (3Ph & E) Steel Wire Armour Cable with Weatherproof Gland	20A Type 'D'	20A Type 'D'	20A Type 'D'	20A Type 'D'	25A Type 'D'
VX-16340-14	16	340W	6.0 mm^2c.s.a., 600/1000V, 3-Core cable (3Ph & E) Steel Wire Armour Cable with Weatherproof Gland	40A Type 'D'	32A Type 'D'	25A Type 'D'	20A Type 'D'	40A Type 'D'
VX-20340-20	20	340W	6.0 mm^2c.s.a., 600/1000V, 3-Core cable (3Ph & E) Steel Wire Armour Cable with Weatherproof Gland	40A Type 'D'	32A Type 'D'	25A Type 'D'	20A Type 'D'	40A Type 'D'
VX-24340-20	24	340W	6.0 mm^2c.s.a., 600/1000V, 3-Core cable (3Ph & E) Steel Wire Armour Cable with Weatherproof Gland	40A Type 'D'	32A Type 'D'	25A Type 'D'	20A Type 'D'	40A Type 'D'
VX-32340-20	32	340W	10.0 mm^2c.s.a., 600/1000V, 3-Core cable (3Ph & E) Steel Wire Armour Cable with Weatherproof Gland	63A Type 'D'	40A Type 'D'	32A Type 'D'	25A Type 'D'	50A Type 'D'

* Chamber allows for multiple inlet/outlet sizes

WARNING! Always ensure cables are installed with adequate mechanical protection!

Disclaimer: These cable recommendations are sized based on the maximum load of the system; therefore fault protection/discrimination should be assessed depending on the site installation and local regulations. **Evoqua UV Technology** is not responsible for any unsafe work practices, procedures, actions, or inactions taken by the client during the installation.

Panel Supply Loads

Please refer to table below for approximate supply loads for each model.

Model	Supply Loads									
	120V	200V	208V	220V	230V	240V	380V-440V		480V	600V	690V
							3ph + N	3Ph	3Ph	3Ph	3Ph
VX-145-*	0.48A	0.28A	0.27A	0.25A	0.24A	0.23A	N/A				
VX-245-6	0.92A	0.55A	0.53A	0.50A	0.48A	0.46A	N/A				
VX-1200-4	N/A	1.1A	1.1A	1.0A	1.0A	0.9A	N/A				
VX-2200-6	N/A	2.3A	2.2A	2.0A	2.0A	1.9A	N/A				
VX-4200-8	N/A	4.6A	4.4A	4.1A	4.0A	3.8A	N/A				
VX-8200-10	N/A	9.2A	8.8A	8.3A	8.0A	7.6A	N/A				
VX-1340-4	N/A	1.8A	1.8A	1.7A	1.6A	1.5A	N/A				
VX-2340-6	N/A	3.7A	3.5A	3.4A	3.2	3.1A	N/A				
VX-4340-8	N/A	7.4A	7.1A	6.8A	6.5AA	6.2A	N/A				
VX-8340-10	N/A	13.3A	13.2A	13.1A	13.0A	12.9A	N/A				
VX-12340-12	N/A						13A	10A	8A	7A	6A
VX-16340-14	N/A						24A	19A	15A	12A	11A
VX-20340-20	N/A						24A	19A	15A	12A	11A
VX-24340-20	N/A						24A	19A	15A	12A	11A
VX-32340-20	N/A						35A	25A	20A	16A	14A
VT-4300-6	N/A	6.9A	6.6A	6.2A	6.0A	5.7A	N/A				
VT-8300-8	N/A	13.3A	13.2A	13.1A	13.0A	12.9A	N/A				
VT-16300-10	N/A						24A	19A	15A	12A	11A
VT-24300-14	N/A						24A	19A	15A	12A	11A

* Chamber allows for multiple body sizes

Note: The supply loads provided are based on the maximum load of the system (i.e. full power).

Installation Checklists

General Installation Checklist

Inspect the goods to ensure no damage has occurred in transit. Check that that all ordered items are present.	
Match the chamber and panel - if multiple systems are delivered to the same site please ensure that the serial numbers match.	
Install the control panel as described in the Control Panel Installation Guidelines	
Run the cables in accordance with local regulations. (Do not pull cables tight around sharp corners as this may affect the performance and reliability of the system, segregate cables, do not cable tie together.)	
Cabling required from Control Panel to Chamber: • Lamp Cable - 1 per lamp, supplied as standard • Earth Cable 1 core - supplied as standard • Temperature Probe Cable - 1 per probe, supplied as standard • UV Probe Cable - 1 per probe, supplied as standard • Wiper Cables (if fitted) ➢ Opto Cable ➢ Wiper Motor Cable	

Chamber Installation Checklist

Connect Earth/Ground cable from the boss on the chamber to the control panel ground/earth point.	
Install the temperature probe by screwing the AT487- temperature probe into the boss on the top of the chamber. Connect the temperature probe cable.	
Install UV Probe Insert the UV probe/s supplied into the UV housing/s located on the chamber Connect the UV Probe cable.	
Check the quartz sleeve/seal Prior to flooding, remove the lamp covers and check that the quartz sleeve/thimble is not damaged as per the Maintenance section of this manual.	
Install the lamp/s and make the electrical connections Check that the correct lamp is used, visually checking the lamp for any damages. If more than 1 lamp is fitted ensure the lamps are fitted in order (i.e. lamp1 then lamp2 etc.)	

Control Panel Installation Checklist

Before the power supply to the panel is switched on:	
Connect the Earth/Ground cable from the chamber to the terminal provided in the panel.	
Connect the Temperature probe and UV probe as per the schematic; this is usually on a terminal strip at the bottom of the panel. Adjacent numbers relate to the connections of the probe wires If more than 1 probe is fitted ensure that probe 1 “monitors” the first lamp	
Connect the lamp cables as per the schematic; this is usually on a terminal strip at the bottom of the panel. Adjacent numbers relate to the connections of the lamp cable cores. See electrical schematic for more information	
Connect the wiper cables (if fitted) as per the schematic; the wire numbers from the wiper mechanism relate to the numbers on the terminal strip. See electrical schematic for more information. Consult Wiping System section for more details on wiper. Note: The wiper is factory calibrated. Please ensure the cables are connected before turning the board on or the wiper will lose its calibration and will require recalibration.	
Connect the Customer I/O – Connect the digital/analogue I/O as required. Please refer to the Control Operation section of the manual	

Commissioning

Use the Commissioning Procedure Checklist to safely put the unit into operation. The following steps should also be taken:

1. The pipe work and UV systems should be filled with water and excess air vented. Check for leaks
2. For commissioning the flow rate of liquid to cool the lamps should be at least 1 m^3/hr (4 gpm) per kW to cool the lamps
3. After lamps have been switched off wait 15 minutes to allow them to cool before attempting to restart - frequent start / stop cycles will shorten lamp life.

	**WARNING!**
	Only switch the unit on when the dust cover is fitted.

Commissioning Procedure Checklist

Ensure the unit has been installed as per local regulations and according to the Installation Guidelines	
Check that the incoming mains connections are correct: Single Phase (Neutral) and Earth, Please check the electrical schematics to verify what power supply is required	
Ensure quartz and lamps are installed and waterproof	
Ensure Temperature and UV Intensity probes are installed and connected to their corresponding terminals in the control panel	
Ensure Lamp cables are installed and connected to their corresponding terminals in the control panel	
Ensure the earth/ground cable is connected from the chamber to the terminal provided in the panel.	
Ensure full flow through the reactor is available and any air trapped at the top of the reactor is released	
Turn on the power at the distribution source	
Check that the voltage on the incoming side of the Isolator is correct and record this in the UV Commission Work Sheet that follows this section	

Test temperature sensor by disconnecting the probe on the chamber; a fault should be displayed. Reconnect the probe and clear the fault (refer to the Control Operation section for more details).	
Time & Date - verify that the time and date are set correctly and adjust if necessary (see Operation section for more details).	
Check that the system variables are set as required i.e. Fixed Flow Rate – consult the System Databook for more details	
Check lamp fault – without turning on the lamp MCBs, start the system; a lamp fault should be displayed. Clear the fault (see Operation section for more details).	
Turn on the Lamp MCBs	
Start the system	
Check the fan is running correctly	
Once the system enters run mode **record the Lamp currents** - allow the system to settle for a minimum of 5 minutes before recording these values.	
Calibrate the UV probe – consult the UV Sensor Calibration section for more details	
Stop the system	
Activate the Automatic Wiper (if fitted) - the system should perform a sweep of the quartz as soon as the Wiper control board is activated Calibrate the wiper (If necessary) – consult the **Automatic Quartz Wiping System** section for more details	

UV Commission Work Sheet

All readings to be obtained with Fixed Flow Rate and lamp in Full Power

Supply Voltages	
P1 – P2	
P1 – P3	
P2 – P3	
P - N	

Lamp Current / Volts / Power															
L1				L2				L3				L4			
L5				L6				L7				L8			
L9				L10				L11				L12			
L13				L14				L15				L16			
L17				L18				L19				L20			
L21				L22				L23				L24			
L25				L26				L27				L28			
L29				L30				L31				L32			

Spectra Readings		Calibration				Spectra Settings	
Dose (mJ/cm²)		Probe 1 UV %		m/A		Final UVT %	
Temp ˚C						Flow meter Enabled (Y or N)	
Flow (m³/hr)						Auto Restart Enabled (Y or N)	
Nominal lamp current						Re Strike Time (mins)	
Average lamp current						Spectra II SD Card back up	
Average UV%							

Checks (pass √ or fail X)		(√ or X)		(√ or X)		(Y or N)	
Lamp Fault		Chamber		Installed Correctly		Cooling fans operating	
Temperature Trip		MCB's Test		Auto wiper		Wiper Calibrated	
Chamber Earth Cable		Quartz Leaks		Low Dose Alarm		Lamp Cable Flash Test	

Condition of UV system on leaving site					
Clean		Local/Remote		By-Pass fitted (Y or N)	
Alarms		Full/Variable/Half Power Enabled		Running (Y or N)	

UV Sensor Calibration

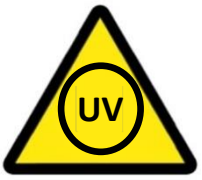

Warning: Do not expose skin or eyes to ultraviolet light.

AT-900 Validated 4-20mA UV Sensor

The validated UV sensors are factory calibrated in reference to a known device.
They are most often used on validated UV systems but can also be used on non-validated UV systems. These sensors are 4-20mA devices and are fitted to the UV sensor housing using a black plastic adaptor.

These sensors must be returned to the factory for calibration every 12 months.
Please contact your supplier for details.

VX/VT Maintenance & Spares

Maintenance Schedule

Maintenance Log

Whenever maintenance work is carried out on the UV system, particularly with reference to lamp changes and cleaning / replacing the quartz, a record should be kept of the work carried out and the lamp run hours noted. This log should be used to monitor general lamp life and to develop accurate frequencies for cleaning and replacing the quartz components.
A maintenance log sheet can be found in the Unit Data-book.

Note: ensure system is electrically isolated and chamber is fully drained before any maintenance work is carried out.

Performance Monitoring

Taking samples from the sample points on the inlet and outlet legs of the UV chamber can be used to monitor the performance of the system. Care should be taken when sampling not to contaminate the sample itself. Poor performance test results can often be traced back to poor sampling techniques.

UV Lamp

Lamp life expectancy is based on continuous use before the output drops to the low UV output threshold level, making replacement necessary. Frequent stop / start operation will reduce lamp life. Please refer to the system Data-book for typical life expectancy of Lamps.

Quartz Cleaning and Replacement

The quartz sleeve should be removed and cleaned at regular intervals. Please refer to the system Data-book for typical life expectancy of Quartz. The wiper (if fitted) cleaning frequency should be increased if there are excessive deposits on the quartz sleeve or decreased if the sleeve remains very clean.
A change in water quality may necessitate a change in the wiper (if fitted) cleaning frequencies. The quartz sleeve should be removed and cleaned in a soap and water solution. Heavier or stubborn deposits can be removed by soaking in a 5% solution of citric acid or wiping with household vinegar. To remove fingerprints from the quartz sleeve, use surgical spirit and a lint free cloth. Please refer to the system Data-book for typical life expectancy of Quartz.

Seals

It is good practice to replace the seals whenever the quartz sleeve is removed from the chamber.

Control panel

Commissioning often takes place in a dusty environment. The inlet filter mat should be cleaned shortly after commissioning and at regular intervals depending on the cleanliness of the air. The control panel RCD (ground fault relay) should also be tested at regular intervals by an electrically competent person by pressing its Test button.
Note that this will shut the unit down and display a Ground Fault.

Twistlok+ System Maintenance

UV Lamp Maintenance

Please refer to the Health & Safety Section at beginning of the manual for Symbol explanations. These are to be adhered to when carrying out the following maintenance procedures.



UV Lamp Extraction	
1	Twist the locking ring on the electrical connector anti-clockwise and remove the TWISTLOK+ PLUG.
2	Unscrew the CLAMP RING RETAINER to gain access to the TWISTLOK+ CONNECTOR & UV LAMP
3	Rotate the TWISTLOK+ CONNECTOR anticlockwise about 2 full turns to release the UV LAMP then gently extract the UV LAMP. Once the UV LAMP is protruding from the Clamp Ring, disconnect the TWISTLOK+ CONNECTOR from the UV LAMP.
4	Carefully extract the UV LAMP from the Quartz keeping the lamp parallel to the Quartz Sleeve at all times to avoid damage.

UV Lamp Installation	
Before inserting a new lamp, ensure all components are clean and dry. Check that all components are mechanically sound and assembled correctly. **Note:** Please ensure that no dirt, debris or fingerprints get onto the lamp surface as this will reduce the lamp life	
1	Carefully insert the UV LAMP into the Quartz Sleeve, keeping it parallel with the sleeve to avoid damage. Leave the UV LAMP with the end connector protruding from the clamp ring.
2	Connect the TWISTLOK+ CONNECTOR to the UV LAMP and insert into the clamp ring. While applying light pressure on the TWISTLOK+ CONNECTOR, rotate the connector for 2 full turns clockwise until the flange on the connector is flush with the clamp ring.
3	Replace the CLAMP RING RETAINER and rotate clockwise to secure the UV LAMP in place.
4	Re-fit the TWISTLOK+ PLUG. This is done by first lining up and engaging the contacts then rotating the locking ring ¼ turn clockwise to secure in place.

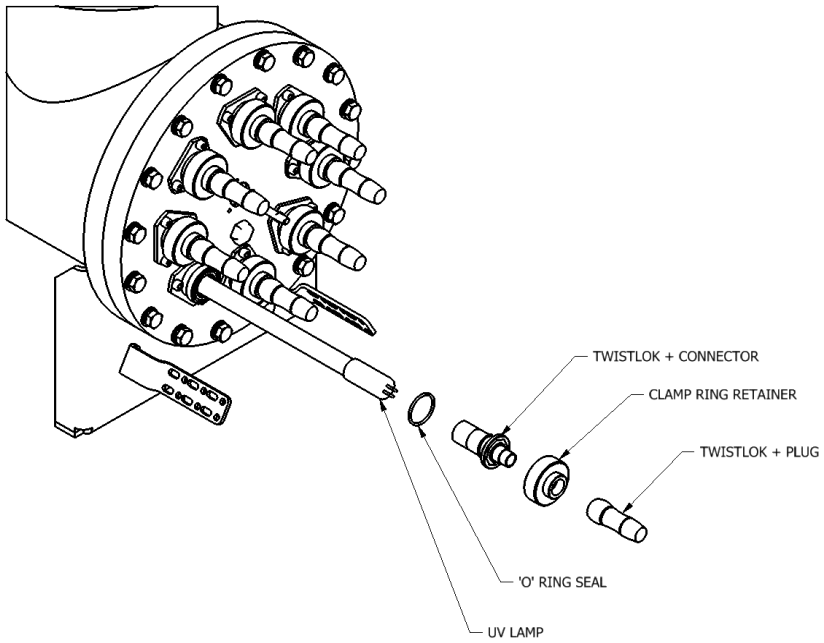

Quartz Sleeve Maintenance

Please refer to the Health & Safety Section at beginning of the manual for Symbol explanations. These are to be adhered to when carrying out the following maintenance procedures.

	

Quartz sleeve Extraction	
To facilitate extraction/installation of quartz during maintenance, the wiper carriage can be moved to a position 1/3rd along the chamber length. This can be done via Spectra by enabling the 'Service Position' (Refer to Control Operation section of the Manual for more details.	
1	Follow the **UV Lamp Extraction** procedure detailed in the previous subsection
2	Remove the CLAMP RING screws and carefully remove the TWISLOK+ CLAMP RING. If the CLAMP RING seems tightly in place this will be the secondary seal doing its job and this is normal. Gentle twisting of the clamping should ease extraction.
3	Remove the PRIMARY SEAL from around the QUARTZ SLEEVE.
Follow procedures 2 & 3 on opposite side of the chamber with the rear clamp ring	
4	Carefully remove the QUARTZ SLEEVE keeping it parallel to avoid damage

Quartz sleeve Installation	
1	Carefully slide the new/cleaned quartz sleeve into the hole in the end flange keeping it parallel so it locates in the hole in the opposing flange. If an automatic wiping system is installed, ensure the sleeve is gently guided through the wiper ring (this can be aided by applying a little water onto the end of the quartz)
2	On the lamp connector side, ensure the SECONDARY SEAL and the electrical connector seal are installed correctly and are in good condition, replace as necessary. On the closed end side, ensure that the SECONDARY SEAL and the lamp soft seat are installed correctly and in good condition, replace as necessary. Place the PRIMARY SEAL over the QUARTZ SLEEVE so it sits into the groove. Ensure that the quartz remains central in the chamber
3	Place the CLAMP RING REAR over the QUARTZ SLEEVE and fasten with the screws finger tight initially. Then tighten the screws in a radial pattern, a quarter turn at a time until the clamp ring is flush with the flange. Follow the same procedure with the TWISTLOK+ CLAMP RING.
4	Follow the **UV Lamp Installation** procedure detailed in the previous subsection

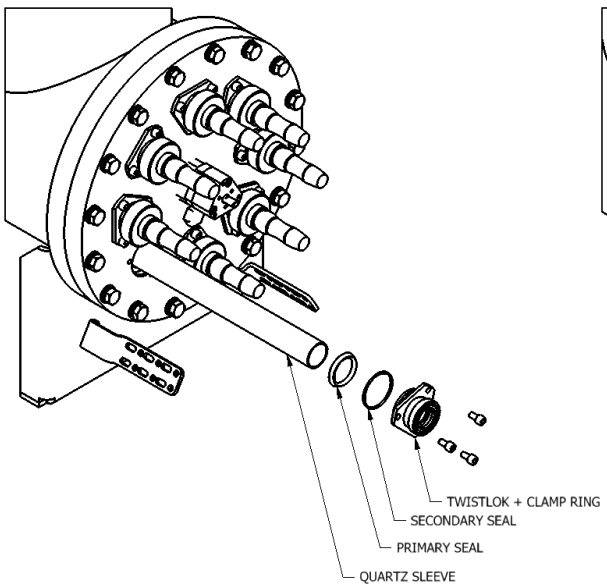

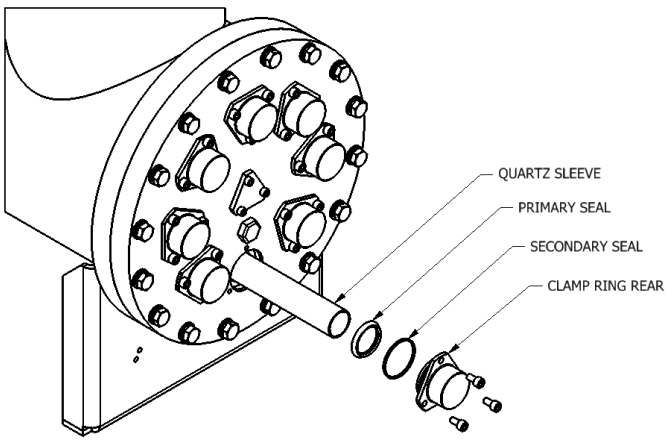

UV Sensor Maintenance

AT 900 Validated FUV Housing Maintenance

Please refer to the Health & Safety Section at beginning of the manual for Symbol explanations. These are to be adhered to when carrying out the following maintenance procedures.

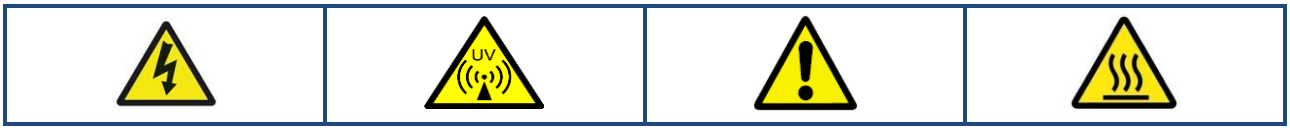

UV Sensor Housing Removal	
1	Unscrew UV probe cable connector from the AT 900 VALIDATED UV PROBE
2	Unscrew the PROBE CAP
3	Remove the AT 900 VALIDATED UV PROBE
4	Unscrew the FUV PROBE HOUSING

UV Sensor Housing Installation	
Ensure all components are clean and dry. Ensure that no dirt or debris gets into the FUV PROBE HOSUING or probe as this may affect readings. Cleaning of the FUV PROBE HOUSING should be carried out regularly and carefully. Approved are common non-abrasive cleaners. To remove external stubborn layers from with quartz window, weak acids are allowed. Cleaning the inside of the Quartz Window should be done using a dry non-abrasive cloth.	
1	Replace FUV HOUSING SEAL if required
2	Screw in place the FUV PROBE HOSUING
3	Insert the AT 900 VALIDATED UV PROBE back into the FUV PROBE HOSUING, and replace the PROBE CAP
4	Screw the UV probe cable connector to the AT 900 VALIDATED UV PROBE

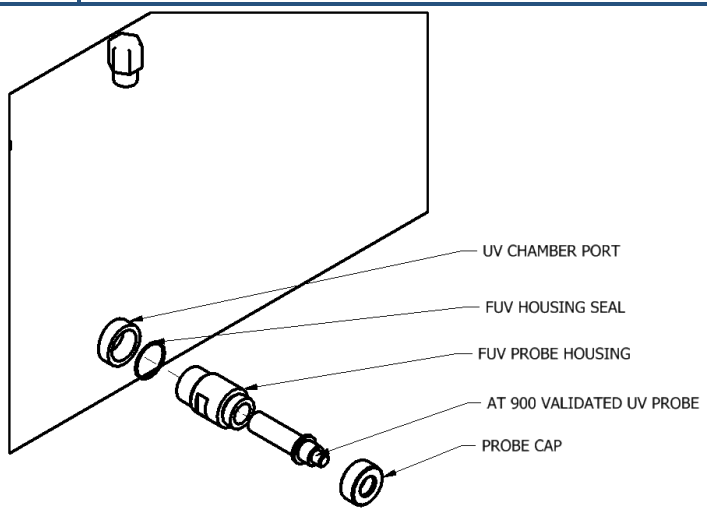

Automatic Wiper System Maintenance

Wiper Motor Maintenance

Please refer to the Health & Safety Section at beginning of the manual for Symbol explanations. These are to be adhered to when carrying out the following maintenance procedures.

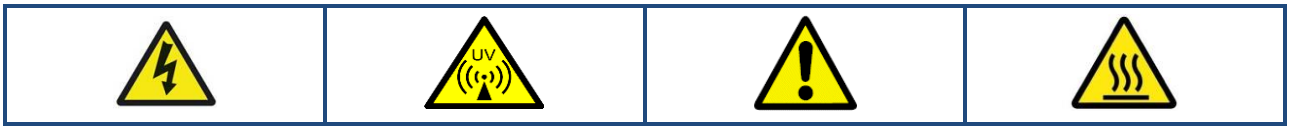

Wiper Motor Removal	
1	Remove the WIPER COVER Lid by removing the 6 x WIPER COVER FIXING SCREWS.
2	Disconnect the OPTO & MOTOR PCB & disconnect the electrical connections, taking note of the cable positions.
3	Unscrew the 2 x WIPER COVER FIXING SCREWS and remove the WIPER COVER & MOTOR ASSEMBLY.

Wiper Motor Installation	
1	Screw the WIPER COVER & MOTOR ASSEMBLY in place lining the fixing holes with the holes on the wiper cover. Screw in place using the 2 x WIPER COVER FIXING SCREWS Ensure the COUPLING & SLOTTED CAM ASSEMBLY is located and mated with the RUBBER COUPLING SPIDER
2	Re-connect all electrical connections
3	Screw back in place the WIPER COVER Lid with the 6 x WIPER COVER FIXING SCREWS

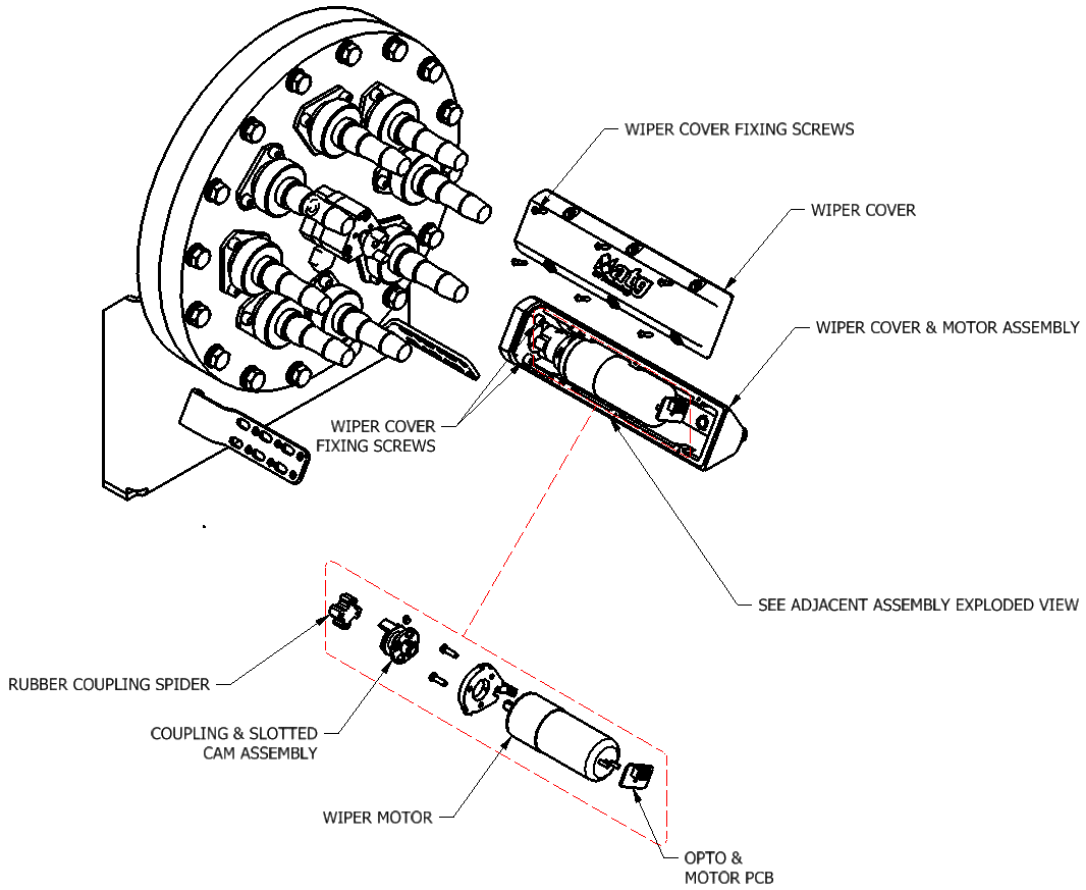

Wiper Bearing & Seal Maintenance

Please refer to the Health & Safety Section at beginning of the manual for Symbol explanations. These are to be adhered to when carrying out the following maintenance procedures.

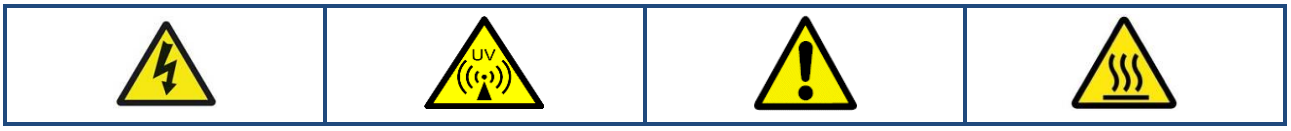

Wiper Bearing & Seal Removal	
1	Follow the **Wiper Motor Removal** procedure from the previous subsection.
2	Remove the grub screw and slide off the COUPLING.
3	Unscrew the 3 bolts and remove the OUTER BEARING HOUSING. Remove the BEARING for inspection.
4	Remove nut and screw from the THRUST BUSH and slide it off the Wiper Shaft. Remove the INNER BEARING HOUSING screws and then remove the INNER BEARING HOUSING and BEARING.
5	Remove the QUAD RING SEALS, BACKING RING, 'O' RING & FLANGED BUSH for inspection.

Wiper Bearing & Seal Installation	
Ensure that new seals are always installed when maintenance is carried out and the bearings are in good condition and lubricate with a food grade grease if necessary.	
1	Insert the FLANGED BUSH over the Wiper Shaft into the groove. Insert the 2 x QUAD RING SEALS, BACKING RING & 'O' RING into one side of the seal Housing and 1 x QUAD RING on the other side **WARNING: These components must be greased!** Slide the assembly onto the wiper shaft.
2	Replace the INNER BEARING HOUSING and BEARING. Replace the three bolts into the INNER BEARING HOUSING.
3	Replace the THRUST BUSH and line up the fixing hole with the hole on the shaft; fasten with the screw & bolt.
4	Replace the OUTER BEARING HOUSING and BEARING and secure with bolts.
5	Reinstall the COUPLING and secure with the grub screw. Check that the shaft can be turned by hand, It should feel tight but be movable by hand.

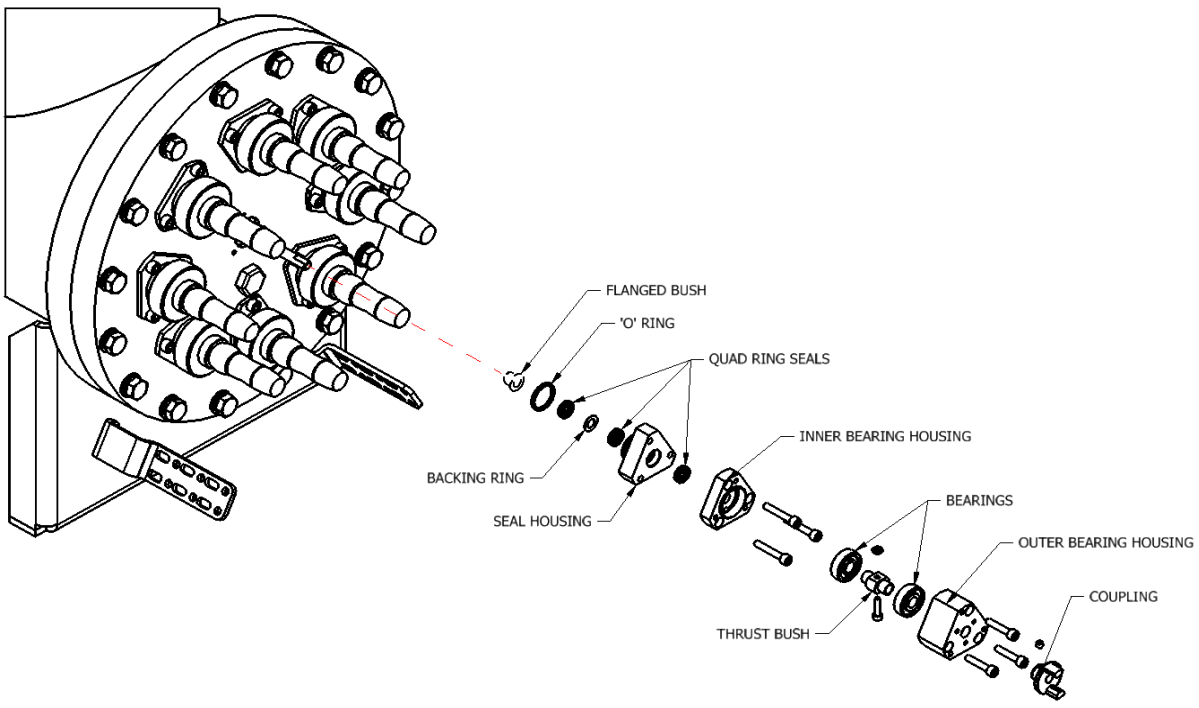

Wiper Blade Maintenance

Please refer to the Health & Safety Section at beginning of the manual for Symbol explanations. These are to be adhered to when carrying out the following maintenance procedures.

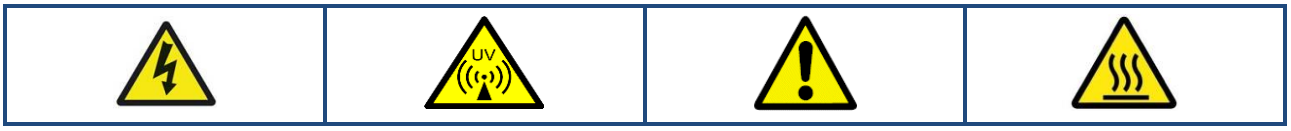

Wiper Blade Removal	
1	Remove the motor assembly (refer to **Wiper Motor Removal** & **Wiper Bearing & Seal Removal** procedures from the previos subsections).
2	Remove the UV Lamps, UV sensors and Quartz sleeves (refer to **UV Lamp Extraction** & **Quartz Extraction** procedures)
3	Unscrew the FLANGE RETAINING FASTENERS to allow the FRONT FLANGE, the WIPER CARRIAGE & the WIPER SHAFT to be removed. **NOTE: For larger flanges, 4 x Slider Bars are provided to assist with the flange removal. These can be located on the rear of the retaining flange and can be screwed into the opposing side.** 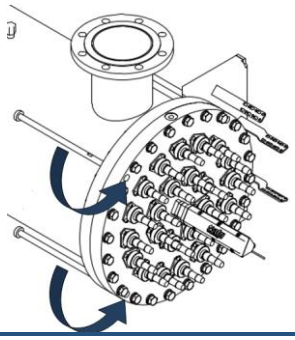

Wiper Blade Installation	
1	Replace the old WIPER BLADES with the new WIPER BLADES and fit them accordingly.
2	Slide the WIPER CARRIAGE & the WIPER SHAFT back into the chamber. Fix back in place the FRONT FLANGE using the FLANGE RETAINING FASTENERS (ensure the O'Ring seal is inserted in the FRONT FLANGE groove).
3	Re-fit the Quartz sleeves and UV Lamp (refer to **UV Lamp installation, & Quartz Installation** procedures).
4	Re-fit the wiper motor assembly (refer to **Wiper bearing & Seal Installation & Wiper Motor Installation** procedures).
5	If the carriage has not been moved, then there should be no need to recalibrate the wiper. If the carriage has been moved, recalibration of the wiper is imperative (refer to **Automatic Wiper** section of the manual).

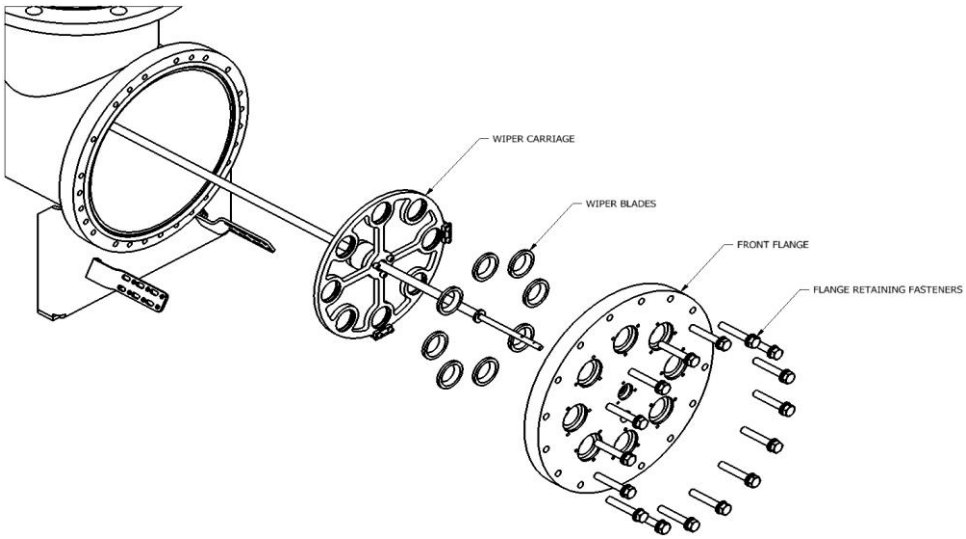

Wiper Body Maintenance

Single-Lamp System

Please refer to the Health & Safety Section at beginning of the manual for Symbol explanations. These are to be adhered to when carrying out the following maintenance procedures.

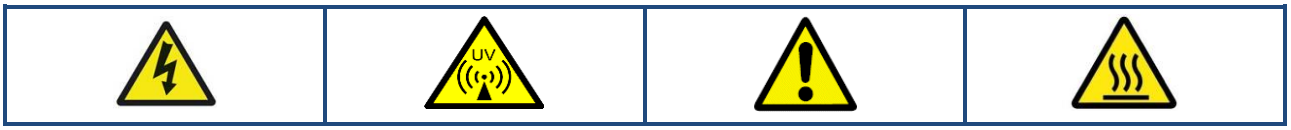

Wiper Body Removal	
1	Remove the motor assembly (refer to **Wiper Motor Removal & Wiper Bearing & Seal Removal** procedures from the previous subsections).
2	Remove the UV Lamps, UV sensors and Quartz sleeves (refer to **UV Lamp Extraction, & Quartz Extraction** procedures)
3	Unscrew the FLANGE RETAINING FASTENERS to allow the FRONT FLANGE, the WIPER CARRIAGE & the WIPER SHAFT to be removed.
4	Unscrew the bolts holding the WIPER CARRIAGE Assembly together, this will allow access to the LEAD SCREW NUT.

Wiper Body Installation	
1	Replace LEAD SCREW NUT (if required).
2	Line up the WIPER CARRIAGES, the LEAD SCREW NUT & SPACERS and screw together with the wiper body screws.
3	Screw the Wiper Assembly back onto the WIPER SHAFT.
4	Re-calibration of the wiper is required after Wiper Body removal (refer to **Automatic Wiper** section).

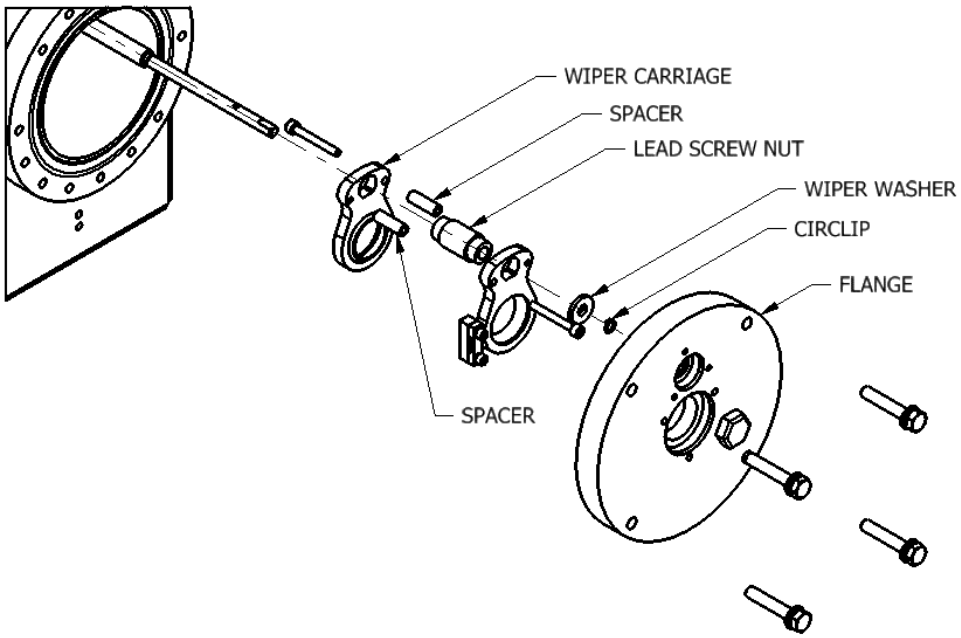

Wiper Body Maintenance

Multi-Lamp System

Please refer to the Health & Safety Section at beginning of the manual for Symbol explanations. These are to be adhered to when carrying out the following maintenance procedures.

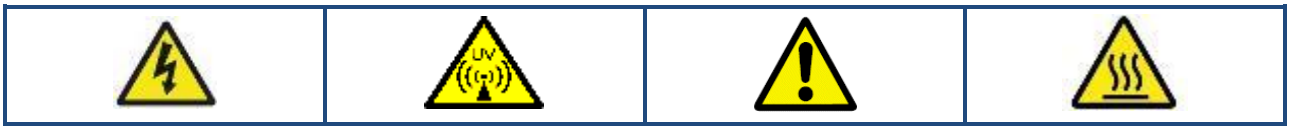

Wiper Body Removal	
1	Remove the motor assembly (refer to **Wiper Motor Removal** & **Wiper Bearing & Seal Removal** procedures).
2	Remove the UV Lamps, UV sensors and Quartz sleeves (refer to **UV Lamp Extraction** & **Quartz Extraction** procedures)
3	Unscrew the FLANGE RETAINING FASTENERS to allow the FRONT FLANGE, the WIPER CARRIAGE & the WIPER SHAFT to be removed.
4	Remove the CIRCLIP & WIPER WASHER from one side of the WIPER SHAFT and unscrew the WIPER CARRIAGE Assembly from the WIPER SHAFT.
5	Unscrew the WIPER CARRIAGE from one side of the WIPER BODY LID. Remove one side of the WIPER BODY LID by unscrewing & removing the wiper body screws.

Wiper Body Installation	
1	Replace LEAD SCREW NUT (if required) and insert inside the WIPER BODY.
2	Screw in place both WIPER BODY LIDS on either side of the WIPER BODY ensureing the O'RING Seal and FLANGED BUSH are between.
3	Screw in place WIPER CARRIAGE onto one side of the WIPER LID.
4	Screw the Wiper Assembly back onto the WIPER SHAFT, ensuring the CIRCLIP along with the WIPER WAHSER are inserted back on the ends of the WIPER SHAFT.
5	Re-calibration of the wiper is required after Wiper body removal (refer to **Automatic Wiper** procedures).

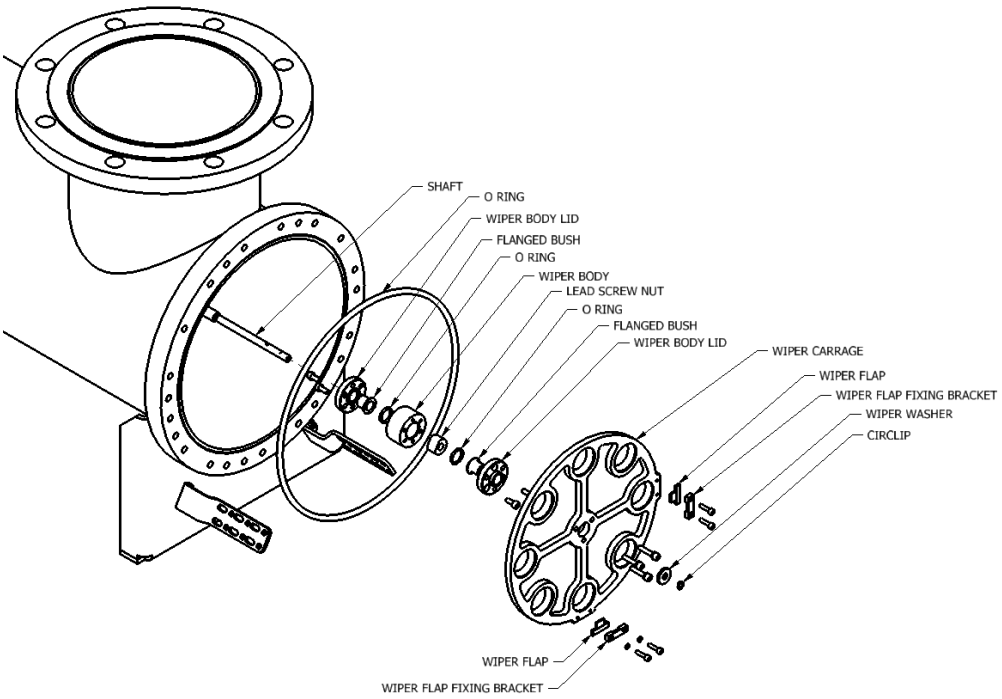

Spare Parts

General Assembly

Note: Typical of a VX-8340-10-8

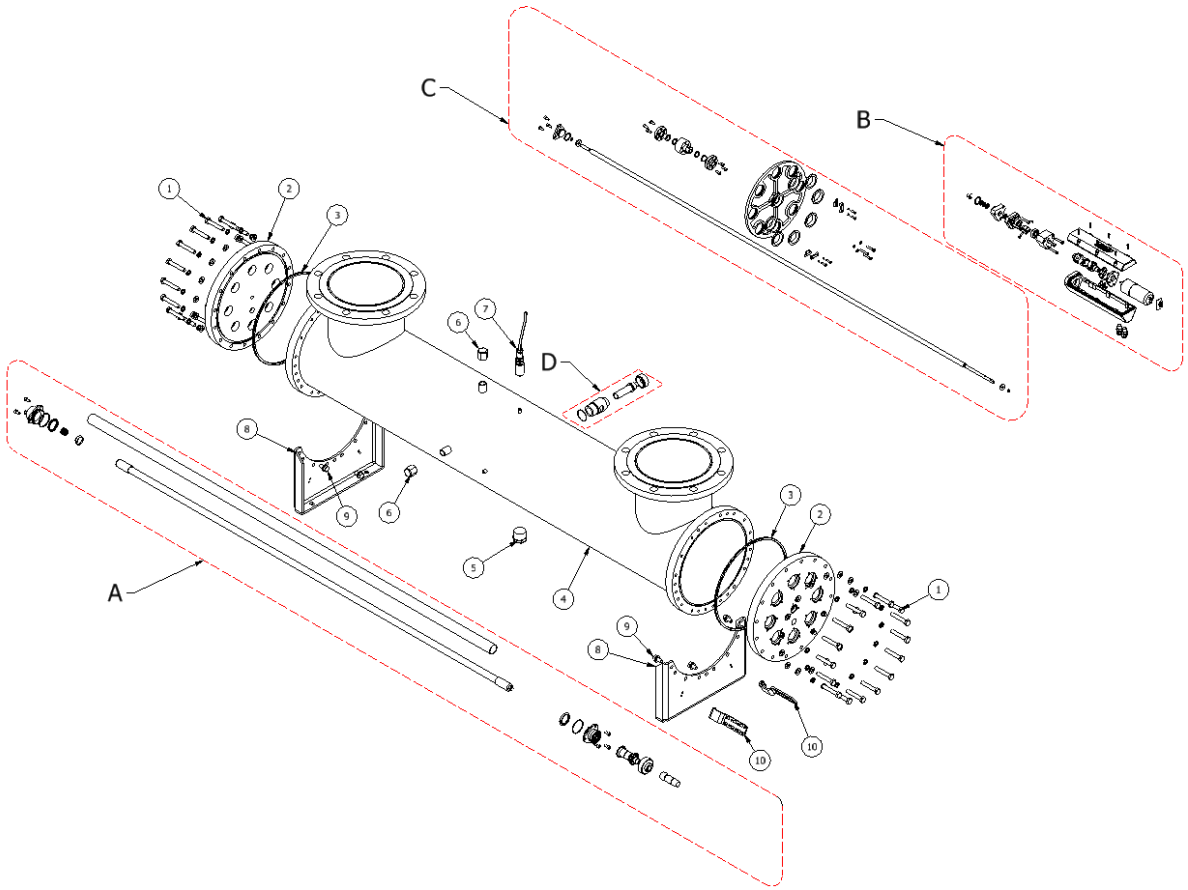

ITEM	PART NO.	DESCRIPTION
A	Lamp & Quartz Assembly	
B	Automatic Wiper Drive Assembly	
C	Automatic Wiper Carriage Assembly	
D	FUV Sensor Housing Assembly	
Note: the sizes of parts in this assembly will vary according to the model		
1	-	Flange retaining Bolts
2	-	Flange
3	Refer to Maintenance Spares List	Flange O'Ring Seal
4	-	Chamber Body
5	-	Drain Plug
6	-	Vent Cap
7	-	AT-487 Temperature Probe
8	-	Mounting Feet
9	-	Mounting Feet Bolt
10	-	Gland Plate

Lamp & Quartz Assembly

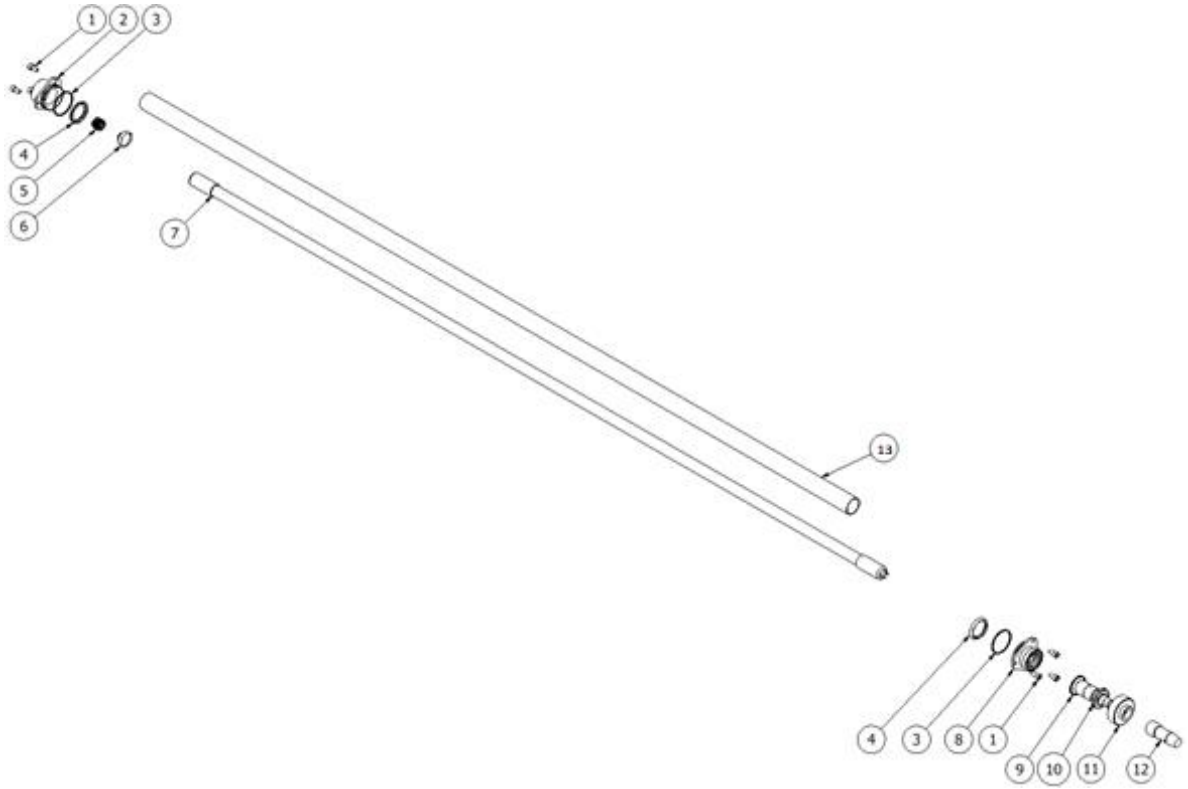

ITEM	PART NO.	DESCRIPTION
1	-	M5 x 16 Sckt head bolt
2	W2T874019	Clamp Ring – Rear
3	Refer to Maintenance Spares List	EPDM 'O' Ring (Secondary)
4	Refer to Maintenance Spares List	EPDM 'O' Ring 30 x 5.0 (Primary)
5	W2T874028	SS Spring
6	W2T874020	Lamp Soft Seat - Q30
	W3T516226	Lamp Soft Seat - Q30 (300W)
7	Refer to Maintenance Spares List	UV Lamp
8	W2T874017	Clamp Ring - Screwed
9	W2T874267	EPDM 'O' Ring
10	W2T874964	TwistLok+ Connector Q30
11	W2T874018	Clamp Ring - Screwed - Retainer - Q30
12	-	TwistLok+ Plug & Lead – Q30
13	Refer to Maintenance Spares List	Lamp Quartz

FUV Sensor Housing Assembly

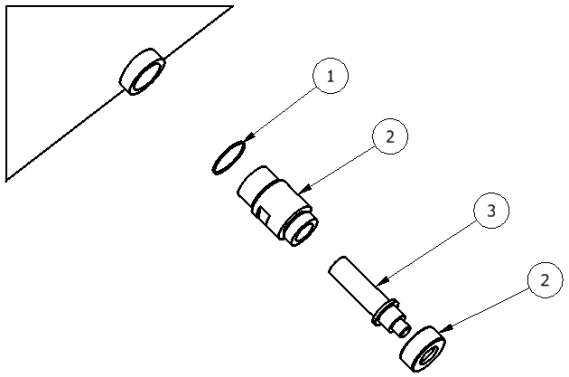

ITEM	PART NO.	DESCRIPTION
1	Refer to Maintenance Spares List	FUV Sensor Housing Seal
2	Refer to Maintenance Spares List	FUV Sensor Housing & Cap (inc. Quartz Window)
3	Refer to Data-book	Validated UV Probe (ONORM)

Automatic Wiper Drive Assembly

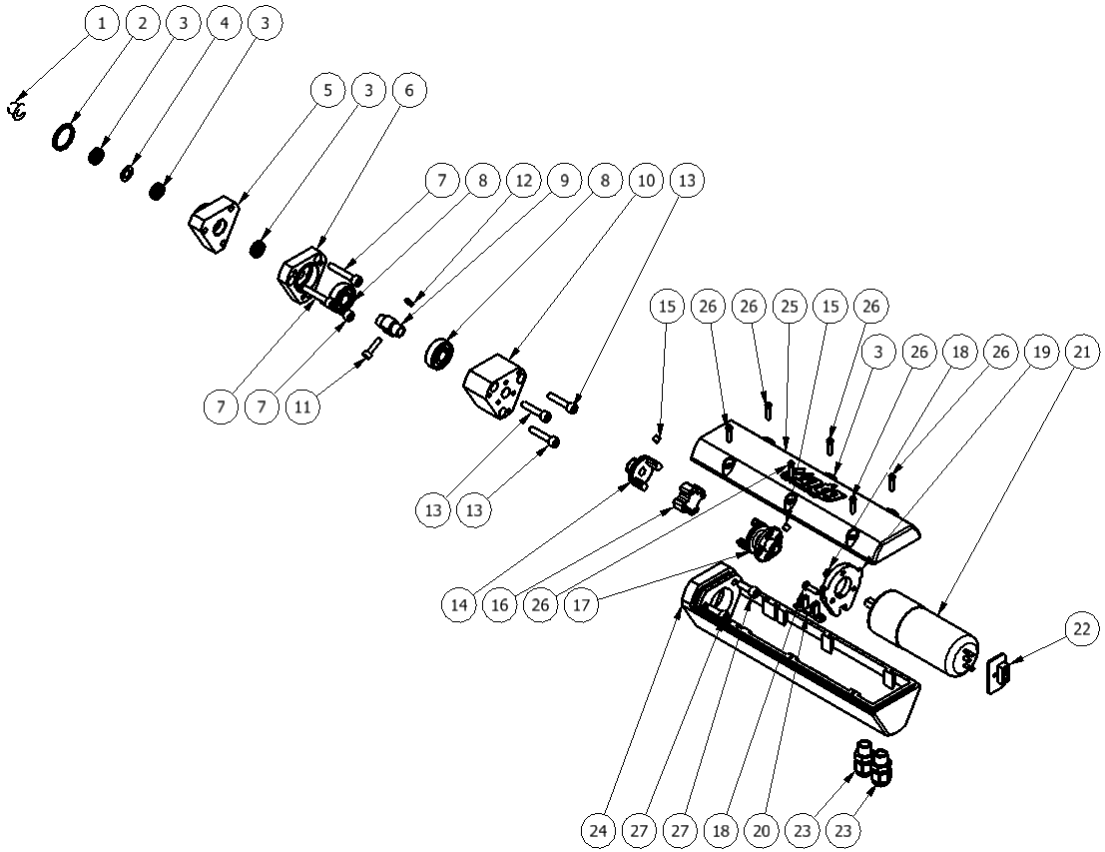

ITEM	PART NO.	DESCRIPTION
1	W2T873707	Flanged Bush
2	Refer to Maintenance Spares List	EPDM 'O'Ring
3	Refer to Maintenance Spares List	Nitrile Quad Ring
4	Refer to Maintenance Spares List	PTFE Backing Ring
5	W2T873759	12mm Shaft - Seal Housing
6	W2T873760	12mm Shaft - Bearing Housing No1
7	-	M5 x 25 Sckt Head Bolt
8	W2T873688	Angular Contact Ball Bearing
9	W2T873762	12mm Shaft - Lead Screw Thrust Bush
10	W2T875378	12mm Shaft - Bearing Housing No2
11	-	M4 x 16 Sckt Head Bolt
12	-	M4 Nylon Nut
13	-	M5 x 30 Sckt Head Bolt
14	W2T873765	12mm Shaft - Coupling Shaft
15	-	M5 x 5 Hex Grub Screw
16	W2T873730	Wiper Motor Rubber Coupling
17	W3T469399	12mm Combined Sensor Cam and Shaft
18	-	M4 x 12 Pan head screws
19	W2T873783	Motor Housing Mount
20&22	W2T873069	ATUV-1150 - Opto Pulse Counter
21	W2T874493	Wiper Motor
23	-	M12 Gland
24	W2T873782	12mm Moulded Wiper Motor Housing
25		
26	-	M3.5 x 13 self-tapping screws

Automatic Wiper Carriage Assembly – Single Lamp

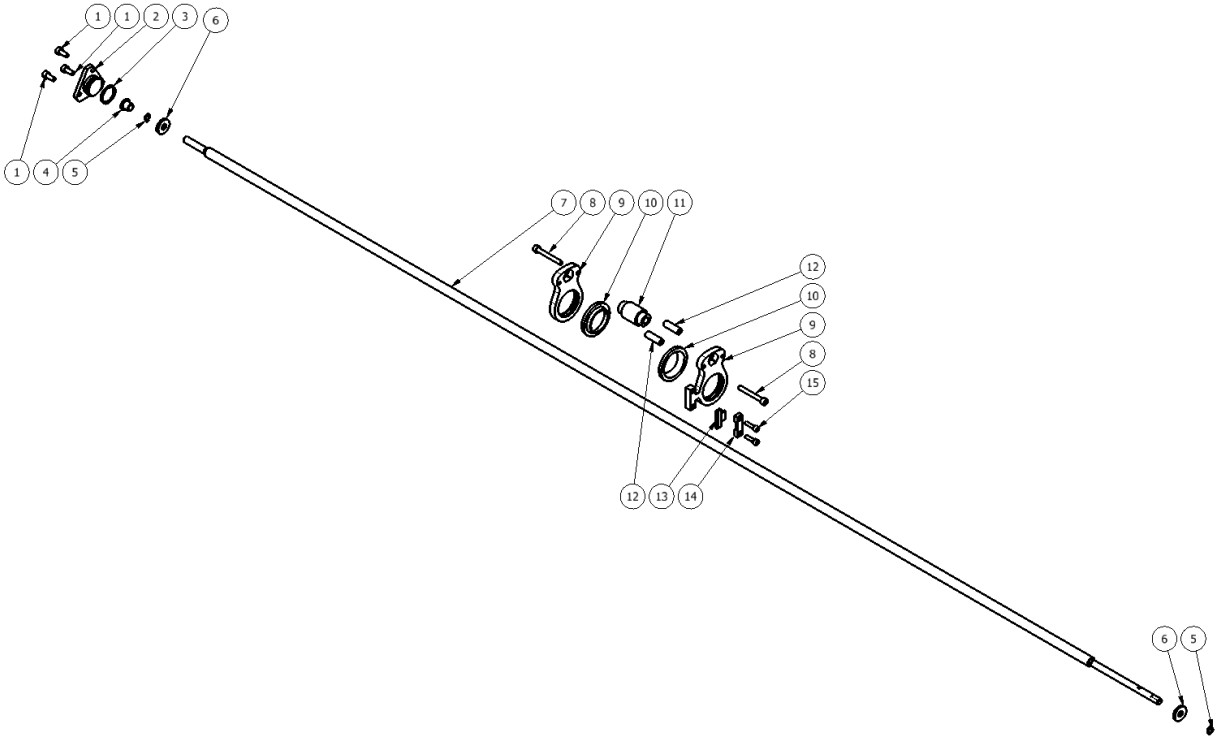

ITEM	PART NO.	DESCRIPTION
1	-	M5 x 12 Sckt Head
2	W2T873768	12mm Shaft - Seal Housing Plug
3	Refer to Maintenance Spares List	EPDM 'O' Ring
4	W2T873707	Flanged Bush
5	W2T873769	12mm Shaft - Wiper External Eclip
6	W2T873758	12mm Shaft - Wiper Washer
7	-	ACME Wiper Shaft
8	-	M5 x 40 Sckt Head Screw
9	W2T873802	Single Lamp Wiper Carriage
10	Refer to Maintenance Spares List	30-Dia Wiper Rings
11	Refer to Maintenance Spares List	Wiper Carriage Lead Screw Nut
12	W2T873676	Wiper Carriage Plate Distance Sleeve
13	Refer to Maintenance Spares List	UV Sensor Housing Wiper
14	W2T873559	Wiper Flap Fixing Bracket
15	-	M4 x 16 Sckt Head Bolt

Automatic Wiper Carriage Assembly - Multi-Lamp

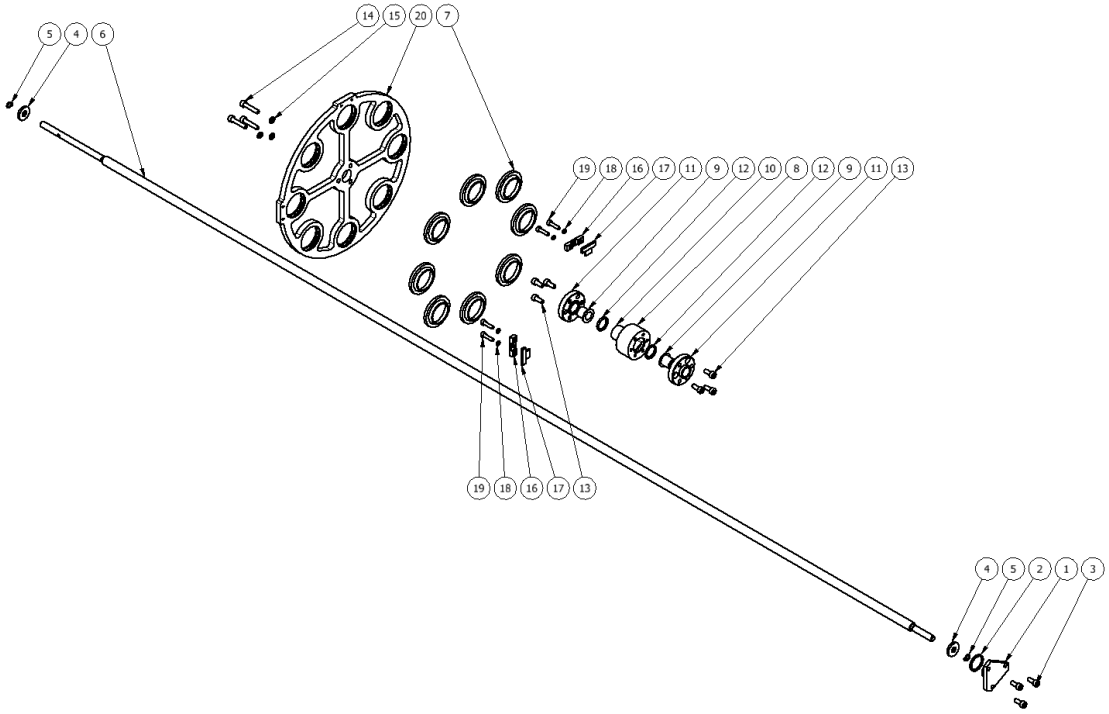

ITEM	PART NO.	DESCRIPTION
1	W2T873768	12mm Shaft - Seal Housing Plug
2	Refer to Maintenance Spares List	EPDM 'O' Ring
3	-	M5 x 16 Sckt head bolt
4	W2T873758	12mm Shaft - Wiper Washer
5	W2T873769	12mm Shaft - Wiper External Eclip
6	-	12mm Wiper Shaft
7	Refer to Maintenance Spares List	30-Dia Wiper Rings
8	W2T873755	12mm Shaft - Wiper Body
9	W2T873708	12mm - Flanged Bush
10	Refer to Maintenance Spares List	Lead Screw Nut
11	W2T873756	12mm Shaft - Wiper Body Lid
12	W2T874255	EPDM 'O' Ring
13	-	M5 x 10 Sckt Head Bolt
14	-	M5 x 40 Sckt Head Bolt
15	-	M5 Spring Washers
16	W2T873559	Wiper Flap Fixing Bracket
17	Refer to Maintenance Spares List	UV Sensor Housing Wiper
18		M4 Spring Washers
19		M4 x 16 Sckt Head Bolt
20	-	Multi-Lamp Wiper Carriage

Maintenance Spares List

ITEM	PART NO.	DESCRIPTION	VX-145-4	VX-145-6	VX-245-6	VX-1200-4	VX-2200-6	VX-4200-8	VX-8200-10	VX-1340-4	VX-2340-6	VX-4340-8	VX-8340-10	VX-12340-12	VX-16340-14	VX-20340-14	VX-24340-20	VX-32340-20	VT-4300-6	VT-8300-8	VT16300-10	VT-24300-14
General Assembly																						
3	W2T874331	4" EPDM Flange Seal	2			2				2												
3	W2T874336	6" EPDM Flange Seal		2	2		2				2								2			
3	W2T874305	8" EPDM Flange Seal						2				2								2		
3	W2T874307	10" EPDM Flange Seal							2				2								2	
3	W2T874335	12" EPDM Flange Seal												2								
3	W2T874310	14" EPDM Flange Seal													2	2						2
3	W2T874314	20" EPDM Flange Seal															2	2				
3	W3T515163*	4" VITON Flange Seal	2			2				2												
3	W3T515164*	6" VITON Flange Seal		2	2		2				2								2			
3	W3T515165*	8" VITON Flange Seal						2				2								2		
3	W3T515166*	10" VITON Flange Seal							2				2								2	
3	W3T515167*	12" VITON Flange Seal												2								
3	W3T515168*	14" VITON Flange Seal													2	2						2
3	W3T515169*	20" VITON Flange Seal															2	2				

ITEM	PART NO.	DESCRIPTION	VX-145-4	VX-145-6	VX-245-6	VX-1200-4	VX-2200-6	VX-4200-8	VX-8200-10	VX-1340-4	VX-2340-6	VX-4340-8	VX-8340-10	VX-12340-12	VX-16340-14	VX-20340-14	VX-24340-20	VX-32340-20	VT-4300-6	VT-8300-8	VT16300-10	VT-24300-14
Lamp & Quartz Assembly																						
3	W2T874274	Secondary Quartz EPDM Seal	2	2	4	2	4	8	18	2	4	8	16	24	32	40	48	64	8	16	32	48
3	W3T515161*	Secondary Quartz VITON Seal	2	2	4	2	4	8	18	2	4	8	16	24	32	40	48	64	8	16	32	48
4	W2T874265	Primary Quartz EPDM Seal	2	2	4	2	4	8	18	2	4	8	16	24	32	40	48	64	8	16	32	48
4	W3T515039*	Primary Quartz VITON Seal	2	2	4	2	4	8	18	2	4	8	16	24	32	40	48	64	8	16	32	48
7	W2T894077	45 W VX DIS Lamp	1	1	2																	
7	W2T873438	200W VX DIS Lamp				1	2	4	8													
7	W2T873443	340W VX DIS Lamp								1	2	4	8	12	16	20	24	32				
7	W2T873449	300W VT TOC Lamp																	4	8	16	24
9	W2T874267	Tertiary Quartz EPDM Seal	1	1	3	1	2	4	8	1	2	4	8	12	16	20	24	32	4	8	16	24
9	W3T515040*	Tertiary Quartz VITON Seal	1	1	3	1	2	4	8	1	2	4	8	12	16	20	24	32	4	8	16	24
13	W3T514874	45 W VX Quartz Sleeve	1	1	2																	
13	W2T874107	200W VX Quartz Sleeve				1	2	4	8													
13	W2T874109	340W VX/VT Quart Sleeve								1	2	4	8	12	16	20	24	32	4	8	16	24
FUV Sensor Housing Assembly																						
1	W3T503464	UV Sensor Housing EPDM Seal	1	1	1	1	1	1	1	1	1	1	1	1	1	1	1	1	1	1	1	1
1	W3T514400*	UV Sensor Housing VITON Seal	1	1	1	1	1	1	1	1	1	1	1	1	1	1	1	1	1	1	1	1
2	W2T892073	UV Sensor Housing	1	1	1	1	1	1	1	1	1	1	1	1	1	1	1	1	1	1	1	1
Automatic Wiper Drive Assembly																						
2	W2T874258	EPDM 'O' Ring	1	1	1	1	1	1	1	1	1	1	1	1	1	1	1	1	1	1	1	1
3	W2T874361	Nitrile Quad Ring	3	3	3	3	3	3	3	3	3	3	3	3	3	3	3	3	3	3	3	3
4	W2T874362	PTFE Backing Ring	1	1	1	1	1	1	1	1	1	1	1	1	1	1	1	1	1	1	1	1
Automatic Wiper Carriage Assembly – Single Lamp																						
3	W2T874258	EPDM 'O' Ring				1				1												
10	W2T875352	30-Dia Wiper Rings				2				2												
11	W2T873674	SP Wiper Carriage Lead Screw Nut				1				1												
13	W3T506772	UV Sensor Housing Wiper				1				1												

ITEM	PART NO.	DESCRIPTION	VX-145-4	VX-145-6	VX-245-6	VX-1200-4	VX-2200-6	VX-4200-8	VX-8200-10	VX-1340-4	VX-2340-6	VX-4340-8	VX-8340-10	VX-12340-12	VX-16340-14	VX-20340-14	VX-24340-20	VX-32340-20	VT-4300-6	VT-8300-8	VT16300-10	VT-24300-14
Automatic Wiper Carriage Assembly - Multi-Lamp																						
2	W2T874258	EPDM 'O' Ring					1	1	1		1	1	1	1	1	1	1	1				
7	W2T875352	30-Dia Wiper Rings					2	4	8		2	4	8	12	16	20	24	32				
10	W2T873757	12mm Shaft - Lead Screw Nut					1	1	1		1	1	1	1	1	1	1	1				
17	W3T506772	UV Sensor Housing Wiper					1	1	1		1	1	1	1	1	1	1	1				

*Optional - alternative seal material

Spectra 3 Membrane Operation V2

Spectra Membrane Control System

Spectra is an automated control system developed by **Evoqua** to control and monitor the operation of its UV Disinfection systems.

Components

The Spectra Control system consists of the following components:

- Spectra Membrane (ATUV-1010)
- ATUV-1220 (I/O Module)
- ATUV-1040 (Wiper Module)
- LP Ballast

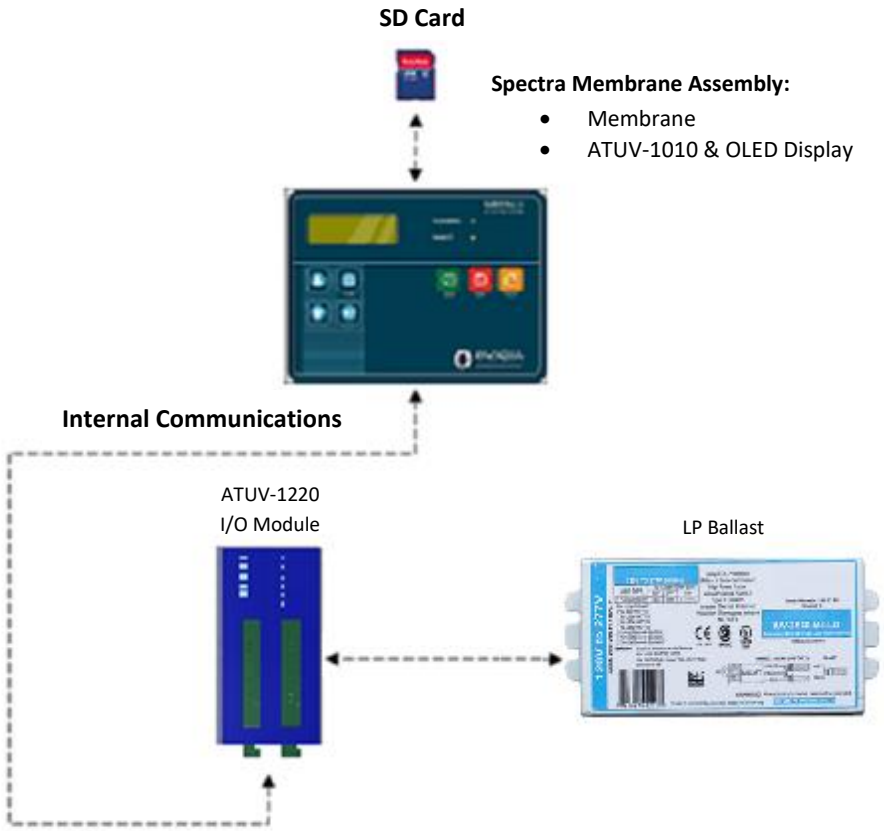

Spectra Membrane

Spectra control panels are operated via the front utilising a 4-line OLED display and a pushbutton membrane:

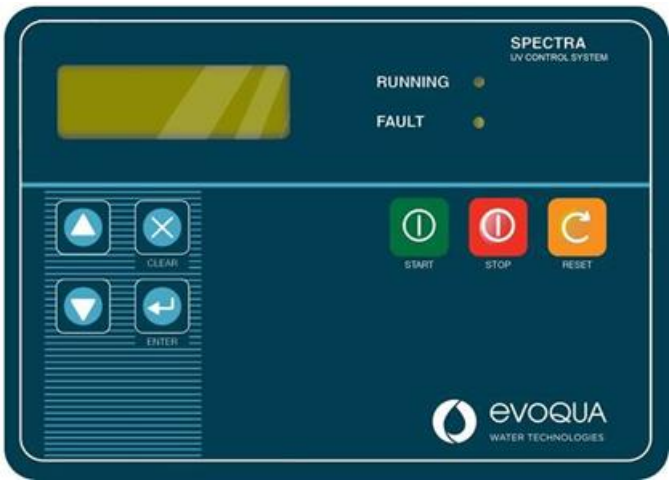

Feature	Description
	Pressing the Start button activates the start-up sequence, turning on the lamp(s). Note: Pressing Start will have no effect if: • A critical or fatal fault is active • Restrike timer (see below) is running • Spectra is in remote/comms control mode
	Pressing the Stop button will turn off the lamp(s) and start the re-strike timer. This timer will inhibit the lamp(s) from being struck again for a defined period (usually 6-8 minutes) to allow a sufficient cool down time otherwise a strike failure may occur.
	The Reset button is used to re-set any faults that have occurred. If a fault is displayed it is good practice to record the fault and the time/date, then reset the fault (if possible unless the fault still exists) and attempt to restart the unit once.
RUNNING LED	Illuminates when system is in Running Mode. Flashes quickly in Start-up Mode. Flashes slowly if system is waiting for a signal from the Process Interlock.
FAULT LED	Illuminates when there is a fault. If this LED is on but no fault is displayed, scroll through using the up and down arrows until the fault is displayed.

ATUV1010 – Main Board

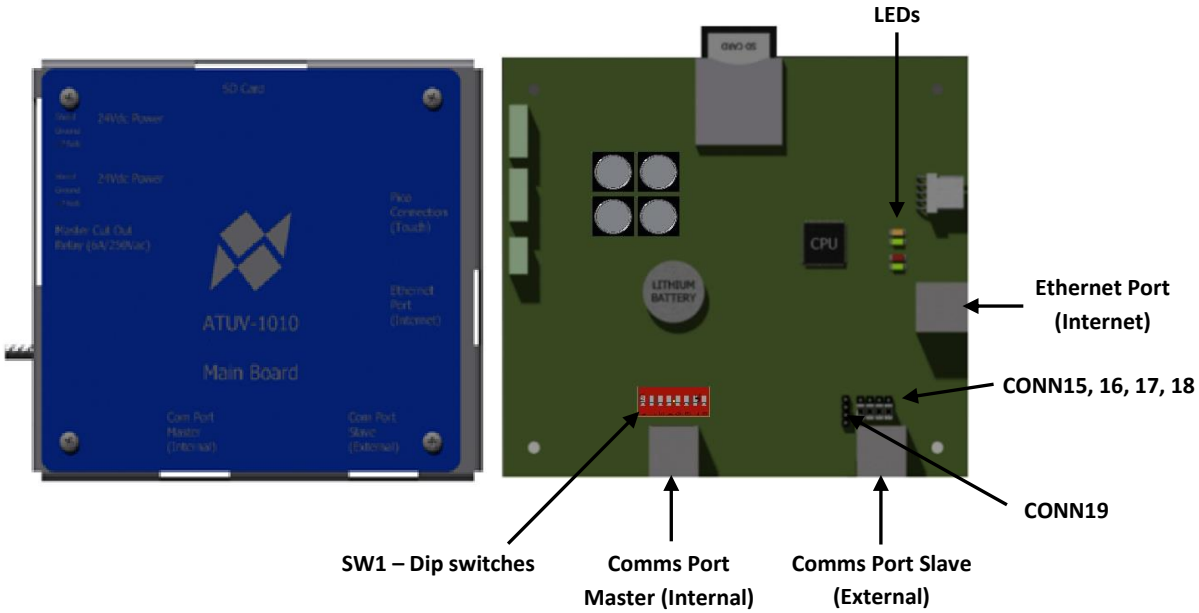

The ATUV-1010 board controls all critical operations including the system operation and customer communications and is the central part of the Spectra control system. All external modules including ATUV-1220, LP Ballast and ATUV-1040 (If fitted) are connected via an internal communications network. The ATUV-1010 also has a removable SD card used for storing various files for the Spectra to operate.

Comms Port Master (Internal)

This connection provides communications from the ATUV-1010 (Mainboard) to the ATUV-1220 (I/O Module) LP Ballast and ATUV-1040 (If fitted) via a RJ45 connection.

Comms Port Slave (External)

This connection provides communications from an external Modbus RTU device (master) with the Spectra operating as a slave device with use of an RJ45 connection using Modbus Protocol. The master device should initiate communications, while the Spectra responds to requests accordingly for data or an action to be taken. The Spectra can be assigned a MODBUS SLAVE ADDRESS ranging from 0-99 when being used as a slave on a network. For further information, please refer to the **Modbus Communication** Section.

Ethernet Port (Internet)

This connection enables the system to monitor and review the Spectra data over the internet. This can be achieved by either using an Ethernet connection with internet access or a Wi-Fi adapter to connect to a Wi-Fi with internet access.

LED's

The Main board has 4 that are used for status indication.

From Top to Bottom:

LED	Description	Status	Indication
3	(Internal Use Only)		
4	This LED indicates if there is power to the Spectra	ON	Power to the Spectra
		OFF	No power to the Spectra
1	This LED indicates the software status	ON	Software successfully loaded & running correctly
		OFF	Software load fault
		FLASHING	Software loading
2	This LED indicates the status of the SD card	ON	SD card healthy
		OFF	SD card not healthy or not found

Headers

The ATUV-1010 has various headers which are used to configure the communications internally and externally.

COMM Port Master (Internal Use Only)

SW1 – Dip Switches

These dip switches are for internal use only and should not be altered.

COMM Port Slave (External)

CONN15, 16, 17, 18

These pins are used to reverse the polarity of Rx and Tx. As standard, headers should be placed on bottom 2 pins as illustrated in the image above. (For more information, refer to the Modbus Communication section).

CONN19

These pins are used to select between 4 wire interface and 2 wire interface. (For more information, refer to the Modbus Communication section).

SD Card

The SD card stores everything the Spectra needs to function. It stores all the systems variables, the menu structure, the version of Spectra program and log files (if enabled).

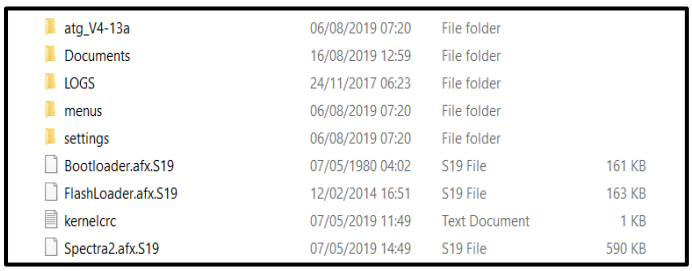

XML Notepad 2007 software is required to edit certain information and variables (.xml files) and can be downloaded for free from the Download Centre on the Microsoft website.

SD Card Files

Setting Files

The following file stores the system parameters:

Config.xml - This file stores all the system parameters. Current variables can be altered using XML Notepad simply by opening the file and selecting the desired variable to be changed from the relevant location. For example, see illustration below for editing Flow Rate:

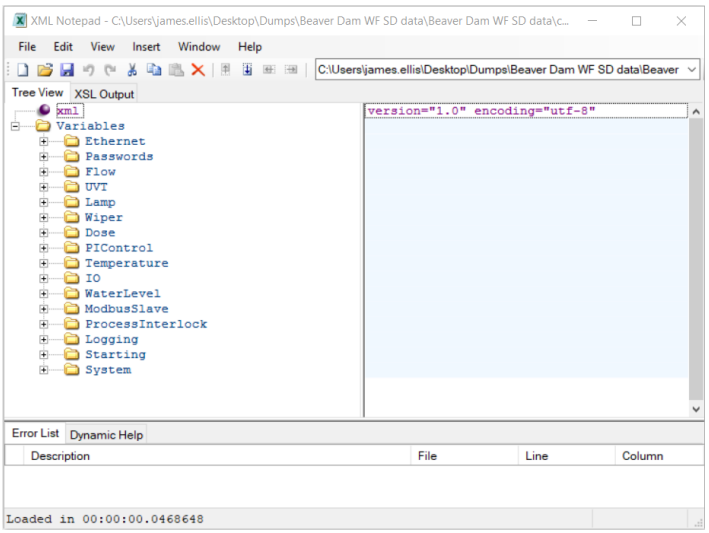

Note: When the desired variable/s has been altered, save, and close the file.

Menu Files

This folder stores all the information relating to the menu structures that appear on the 4-line OLED display. This information is factory set and should not be altered.

Software Files (Also located on the Root of the SD Card)

This folder contains the Spectra Software programs. These files should not be altered.

Log Files

The following files are not of use to the user but may be used in the unlikely event of a malfunction.
Logfile (1).csv - These files store all the data logs. Each CSV file will contain 1000 records with the latest file being the highest number (For example once Logfile1 reaches 1000 records then Logfile2 will be created.)

I/O Module (ATUV-1220)

The I/O Module is the main interface module and is located inside the panel consisting of various Analogue/Digital inputs and outputs:

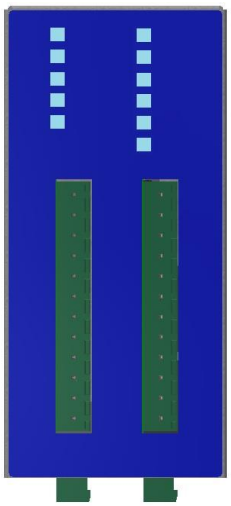

LEDs

The Digital Input & Output LED lights illuminate when energised and extinguish when de-energised.

For the **Analogue Inputs (UV1, UV2 & AI1)**, each LED indicates the following:

Condition	Range
ON	> 3.5 mA
Flashing	> 2mA, < 3.5 mA
OFF	< 2mA

For the **Analogue Outputs**, the following LED's indicate:

Output	Status
AO1	Communications to the ATUV-1010 (mainboard) is healthy

To ensure the system is healthy, AO1 LED should be illuminated.

Inputs/Outputs

Below details the I/O available via the ATUV-1220 I/O Module:

ATUV 1220 I/O Module – Analogue Inputs		
ANALOGUE INPUT (4-20mA)		
UV1	-	**UV INTENSITY PROBE 1**
Used to connect a 4-20mA output from the UV intensity Probe.		
UV2	-	**UV INTENSITY PROBE 2**
Used to connect a 4-20mA output from the UV intensity Probe.		
AI1		**SELECTABLE INPUT 1**
Selectable Input – See SETUP MENU SCREEN – COMMS & I/O		
TEMP		**CHAMBER TEMPERATURE INPUT**
Used to connect a Temperature sensor (PT100) to measure the temperature at the wall of the chamber.		

ATUV 1220 I/O Module – Analogue Outputs		
ANALOGUE OUTPUTS (4-20mA)		
AO1	-	**Selectable Output 1**
Selectable Output – See SETUP MENU SCREEN – COMMS & I/O		

ATUV 1220 I/O Module – Digital Inputs		
DIGITAL INPUTS – For use with Volt Free Contacts – Signal Voltage 24Vdc		
DI1	-	**Selectable Digital Input 1***
Selectable Input – See SETUP MENU SCREEN – COMMS & I/O		
DI2	-	**Selectable Digital Input 2****
Selectable Input – See SETUP MENU SCREEN – COMMS & I/O		
DI3	-	**N/A**
Internal Use Only		

*Input is set to **REMOTE START/STOP** as Default

ATUV 1220 I/O Module – Digital Outputs		
DIGITAL OUTPUTS – Volt Free Contacts 250Vac 3Amp max.		
DO1	-	**Selectable Output 1**
Selectable Output – See SETUP MENU SCREEN – COMMS & I/O		
DO2	-	**Selectable Output 2**
Selectable Output – See SETUP MENU SCREEN – COMMS & I/O		
DO3	-	**N/A**
Internal Use Only		

Start-up Sequence

The following conditions must be achieved for the system to go into Running Mode:

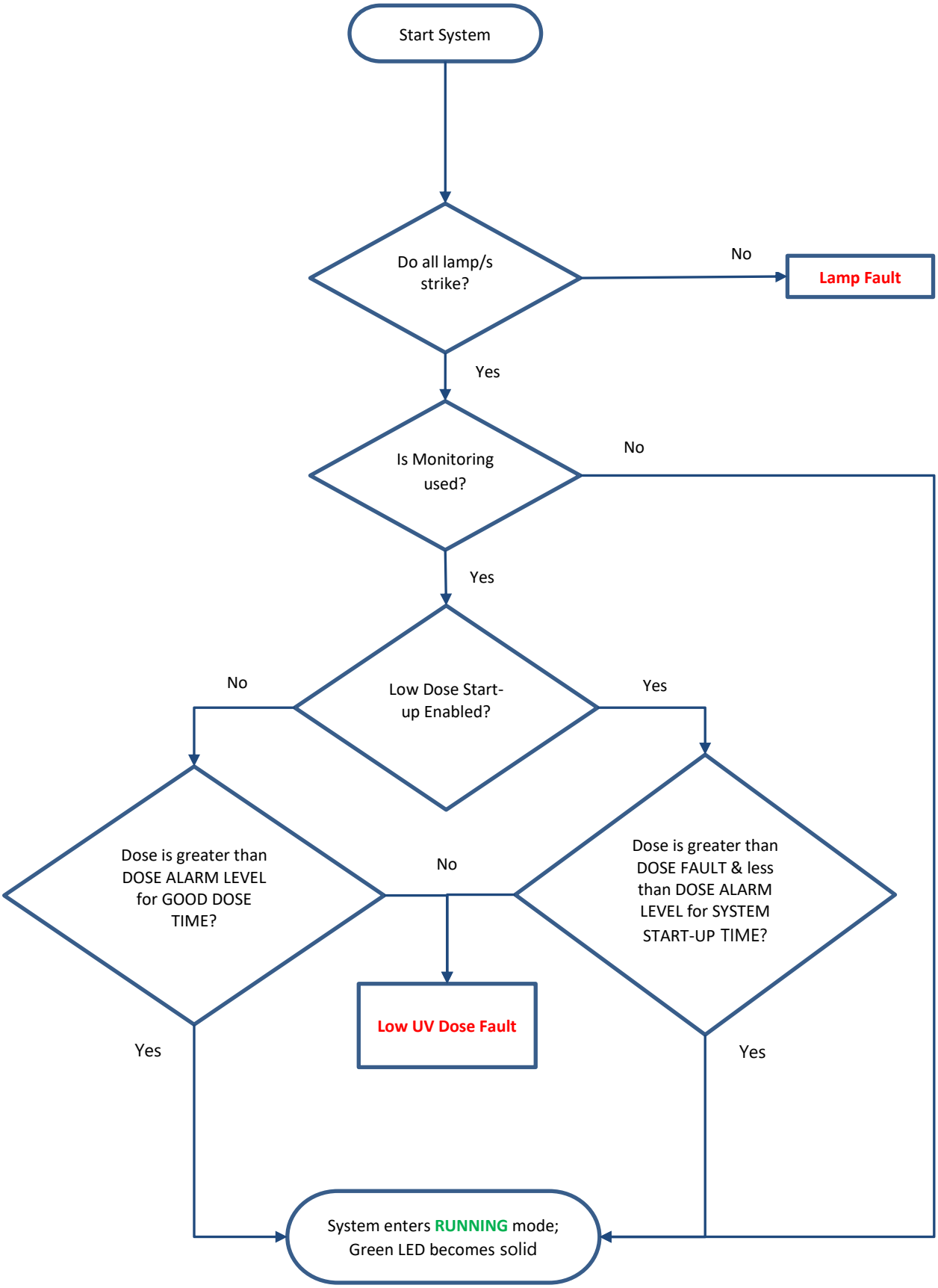

Spectra Operation

Main Screens

Additional functions of the Spectra are accessed via the keypad on the Membrane. The keypad has the buttons Up, Down, Enter and Clear which allow the operator to scroll through the screens, enter values and select various control options.

Menu Navigation	
	Use these keys to scroll up and down the menu
	Press this key to enter the Menu or variable
	Pressing this button moves back up one level in the menu structure. When ready to exit the screen, pressing this button will take you back to the Main information screens

Modifying Variables	
	Use these keys to modify / select the relevant variables
	Press this key to accept the changes made to the variable
	Pressing this button returns you to the previous screen without accepting the changes made

The main information screens shown below can be scrolled through using the up and down arrows. These screens provide details about the systems running condition including; lamp current, flow rate and UV Dose.
Pressing Enter on certain screens will give more information, e.g. pressing enter on the lamp current screen will show the individual lamp information (e.g. lamp current, hours and strikes) if more than one lamp is in use, the up and down arrows can be used to view other lamps information.

NOTE: Pressing the Clear button will always move back out of the current menu to the previous screen. Should more than one fault occur, the fault screen with the highest priority will be displayed. Pressing DOWN on the keypad accesses the lower priority screens. Once the cause of the alarm or fault has been rectified, pressing the reset button on the front membrane will reset the alarm.

Navigating the Main Information Screens (With Monitoring)

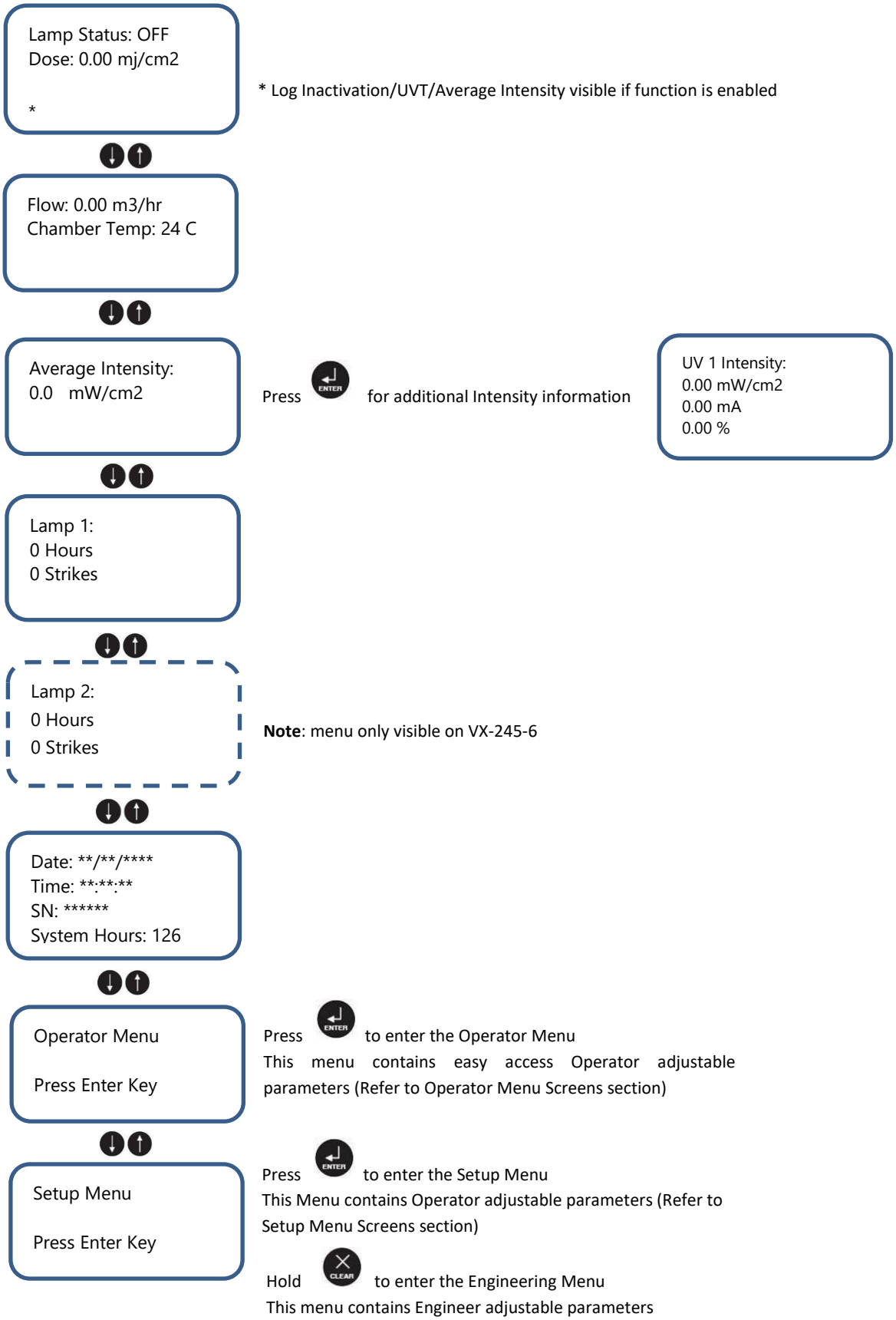

Navigating the Main Information Screens (No Monitoring)

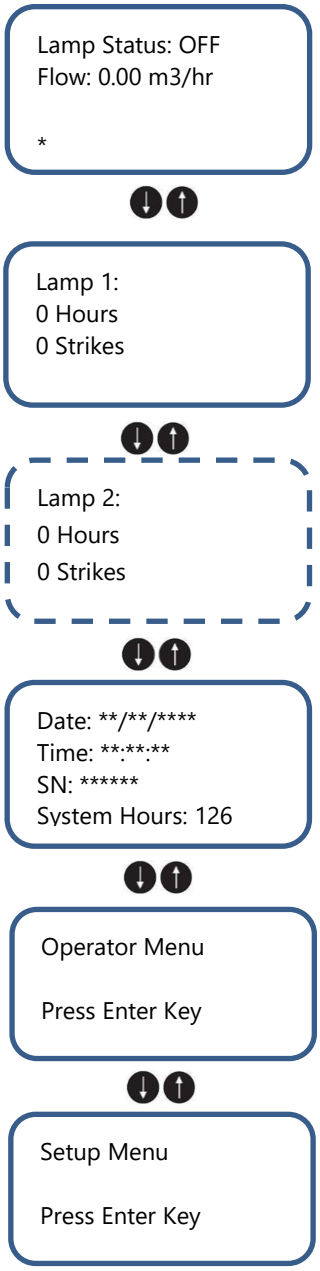

* UVT visible if function is enabled

Note: menu only visible on VX-245-6

Press ENTER to enter the Operator Menu
This menu contains easy access Operator adjustable parameters (Refer to Operator Menu Screens section)

Press ENTER to enter the Setup Menu
This Menu contains Operator adjustable parameters (Refer to Setup Menu Screens section)

Hold CLEAR to enter the Engineering Menu
This menu contains Engineer adjustable parameters

Fault Screens

The tables below describe the 3 different types of faults that the Spectra displays:

- Fatal Faults
- Critical Faults
- Non-Critical Alarms

Fault Screen Descriptions		
Fatal Faults - Shuts the system down and will require a manual reset before the system can be restarted		
	I/O Communications Watchdog	
		Communications to the common IO module has been lost
	Local Stop Fault	
		The unit has been stopped using the local stop button when selected to remote run. Press reset to allow the unit to restart from remote. For safety reasons this alarm is not resettable via the Modbus communications if fitted.
Critical Faults - Shuts the system down and will require a manual reset before the system can be restarted.		
	Control Panel Over Temperature	
		Control Panel has exceeded its CONTROL PANEL TEMP FAULT set point.
	UV Chamber Over Temperature (Only if Monitoring Installed)	
		Chamber Temperature has exceeded FAULT TEMPERATURE set point.
	Ballast/Lamp Fault	
		Ballast / Lamp fault causing lamp to fail to strike/while running

Fault Screen Descriptions (Cont.)		
	Low UV Dose (Only if Monitoring Installed)	
		Actual Dose is less than DOSE FAULT LEVEL for low dose time.
	Process Interlock Shutdown	
		The Process Interlock input has de-energised whilst unit was running. The unit will require a manual reset to re-start.
	SD Card Not Inserted	
		SD card is not inserted or corrupt
	I/O Module Not Calibrated	
		ATUV-1220 requires calibrating
	I/O Modules Less Than Expected	
		Number of I/O modules detected less than specified
	Flow Meter Out of Range	
		The flow meter input is outside the 4mA and 20mA tolerances
Non-Critical Alarms – Displays the Fault/Alarm but will allow the system to continue running		
	Process Interlock Interrupt	
		The Process Interlock input has de-energised whilst unit was running. The unit will re-start after the signal is regained and the re-strike period has elapsed.
	Low UV Dose (Only if Monitoring Installed)	
		Actual Dose is less than DOSE ALARM LEVEL for low dose time.
	Lamp Approaching End of Life	
		Lamp run hours have exceeded lamp life set point and is recommended to be replaced.
	UV Chamber Over Temperature (Only if Monitoring Installed)	
		Chamber Temperature has exceeded ALARM TEMPERATURE set point.
	Power Loss When Running	
		Power to the system has been lost while the lamp(s) were running

The Spectra also displays other priority information that the operator may find useful:

OTHER PRIORITY SCREENS		
	Re-Strike Timer Running	
		Indicated the restrike time remaining until the lamps can be re-struck

Note: For details on how to Troubleshoot the above faults, please refer to the **Troubleshooting** section at the end of this Manual

Operator Menu Screens

This menu screen contains easy access operator adjustable parameters:

Menu	Variable
Operator	System Control Mode
	Fixed Flow Rate
	Flow Meter Source

OPERATOR	>	SYSTEM CONTROL MODE	
Description: Used to select how to start/stop the system either locally or remotely			
Selectable Values	*	Local	System can only Start/Stop by pressing Start on the Spectra
		Remote	System can Start/Stop remotely via a closed hardwired signal into DI1 on ATUV-1220. Can also be stopped via the Spectra for emergency purposes.
		Comms	System can Start/Stop via external comms. Can also be stopped via the Spectra for emergency purposes.

FLOW	>	FIXED FLOW RATE*	
Description: This value will be used as the flow rate during the start-up period. If no flow meter is set up this value will be used as the constant flow rate.			
Selectable Values	0-9000		m^3/hr
	0-943.5		BPM
	0-57.1		MGD
	0-39624.5		GPM
	0-216		Ml/d
	0-2499.5		l/s

*For default Fixed Flow Rate refer to Product Flow Information Table in the **Installation, Commissioning & Calibration** Section

OPERATOR	>	FLOW SOURCE	
Description: Used to select what flow meter value is to be used when the system is in running mode. During start-up FLOW RATE will always be used			
Selectable Values	*	FIXED	Fixed Value
		ANALOGUE	4-20 mA Flow Meter Input
		COMMS	Flow Signal via Comms

Setup Menu Screens

The Setup Menu Screens allow the operator to alter the way the system will run by changing the system variables

Warning – Altering variables can stop the system working correctly: only suitably qualified persons should alter any of the system variables

- To enter the setup menu screen as an operator, press enter on the set-up screen
- Enter the **A T G** Password using the up and down arrows and the enter key
- Pressing clear at any point will return you back you to the main screens

MENU	VARIABLE	MENU	VARIABLE
FLOW	Fixed Flow Rate	COMMS and I/O	Analogue Output 1 Source
	Flow Units		Digital Input 1 Source
	Flow Source		Digital Input 2 Source
	Flow Meter Max		Digital Output 1 Source
LAMP	Restrike Time		Digital Output 2 Source
	Reset Individual Lamp hours		Modbus Slave Address
	Reset All Lamp Hours		DHCP
*DOSE	Dose Units		IP Settings
	Dose Set-Point		DNS
	Dose Alarm	PROCESS INTERLOCK	Process Interlock Mode
	Dose Fault		Process Interlock Action
	Good Dose Time		Process Interlock Delay
	Low Dose Time	UVT	UVT Source
	Low Dose End Time		Fixed UVT
	Low Dose Start-up		UVT Meter Max
	Intensity Units	MISCELLANEOUS	Auto Restart
	UV Sensor Max		Change Password?
	UV Dose Max		Time
TEMPERATURE	Temperature Units		Date
	*Chamber Temperature Alarm		Load Defaults
	*Chamber Temperature Fault		
	*Chamber Temperature Alarm Dead-band		
	Panel Temperature Fault		

*Only available if monitoring is enabled

Navigating the Setup Screen

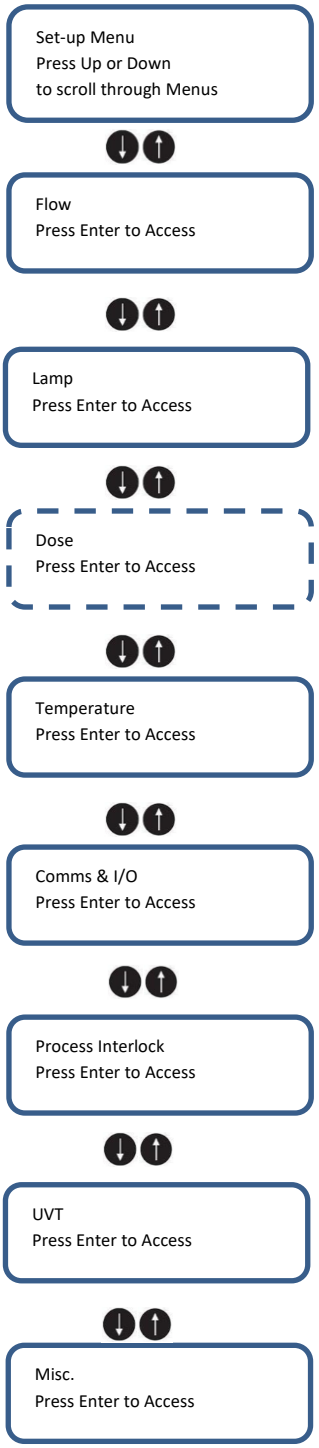

Press ENTER to change Flow Parameters

Press ENTER to change Lamp Parameters

Press ENTER to change Dose Parameters
Note: Menu only available if monitoring is enabled

Press ENTER to change Temperature Parameters

Press ENTER to change Comms & I/O Parameters

Press ENTER to change Process Interlock Parameters

Press ENTER to change UVT Parameters

Press ENTER to change Miscellaneous Parameters

Setup Menu - Parameter Descriptions

Flow

FLOW	>	FIXED FLOW RATE	
Description: This value will be used as the flow rate during the start-up period. If no flow meter is set up this value will be used as the constant flow rate.			
Selectable Values		0-9000	m^3/hr
		0-943.5	BPM
		0-57.1	MGD
		0-39624.5	GPM
		0-216	Ml/d
		0-2499.5	l/s

*For default Fixed Flow Rate refer to Product Flow Information Table in the **Installation, Commissioning & Calibration** Section

FLOW	>	FLOW UNITS	
Description: Used to select which flow units are required.			
Selectable Values	*	m^3/hr	Cubic metres per hour
		BPM	Barrels per minute
		MGD	Million gallons (US) per day
		GPM	Gallons (US) per minute
		Ml/d	Million litres per day
		l/s	Litres per second

FLOW	>	FLOW SOURCE	
Description: Is used to select what flow meter value is to be used when the system is in running mode. During start-up FLOW RATE will always be used.			
Selectable Values	*	STATIC FLOW	Fixed Value
		COMMS	Flow Signal via Comms
		FLOW METER	4-20mA Flow Meter Input

FLOW	>	FLOW METER MAX	
Description: Used to convert flow meter input (in mA) to the actual flow rate. The flow meter reading at 20 mA should be entered.			
Selectable Values	*	0-9000	m^3/hr
		0-943.5	BPM
		0-56.9	MGD
		0-39624.5	GPM
		0-216	Ml/d
		0-2499.5	l/s

Lamp

LAMP	>	RESTRIKE TIME
Description: Used to set the time required for the lamp to cool sufficiently to allow re-strike.		
Selectable Values	0 – 60	Minutes

LAMP	>	RESET INDIVIDUAL LAMP HOURS	>	RESET LAMP # HRS
Description: Is used to reset individual lamp life hours and strikes upon replacing a specific lamp. Use the up and down arrows to scroll through the different lamps and press enter to select Yes to reset the hours for that particular lamp.				
Selectable Values	Yes			
	No			

LAMP	>	RESET ALL LAMP HOURS
Description: Is used to reset lamp life hours and strikes for all lamps. Press Enter to select Yes to Reset ALL lamp hour counters.		
Selectable Values	Yes	
	No	

Dose

Note: Menu only available if Monitoring is enabled

DOSE	>	DOSE UNITS	
Description: Working DOSE units can be selected.			
Selectable Values	*	mJ/cm^2	
		J/m^2	
		J/cm^2	

DOSE	>	DOSE SET-POINT	
Description: Used to set the target Dose. (Used for control mode)			
Selectable Values	0 – 5,000		mJ/cm^2
	0 – 50,000		J/m^2
	0.00 – 5.00		J/cm^2

DOSE	>	DOSE ALARM	
Description: When the measured dose drops below the alarm value for LOW DOSE TIME, the unit will display a non-critical alarm and will continue to run.			
Selectable Values	1 – 5,000		mJ/cm^2
	1 – 50,000		J/m^2
	0.01 – 5.00		J/cm^2

DOSE	>	DOSE FAULT	
Description: When the measured dose drops below the fault value for LOW DOSE TIME, the unit will display a critical alarm and will shut down. DOSE FAULT LEVEL must be less than DOSE ALARM LEVEL			
Selectable Values	0 – 5,000		mJ/cm^2
	0 – 50,000		J/m^2
	0.00 – 5.00		J/cm^2

DOSE	>	GOOD DOSE TIME	
Description: The measured Dose must be greater than the ALARM LEVEL for the GOOD DOSE TIME in order for the system to switch into Running mode. (This value is usually set to 15)			
Selectable Values	0 – 120		Seconds

DOSE	>	LOW DOSE TIME	
Description: This variable sets the length of time the measured dose can drop below the Alarm or Fault values before activating the Alarm or Fault. (This value is usually set to 30)			
Selectable Values	0 – 60		Seconds

DOSE	>	LOW DOSE END TIME	
Description: Sets the length of time a measured good dose must be seen in order to end the low dose timer and set the system back to normal running conditions.			
Selectable Values	*	1-15	Seconds

DOSE	>	LOW DOSE STARTUP	
Description: Used to define whether the system will go into running mode if the measured dose is greater than FAULT LEVEL but less than ALARM LEVEL. If enabled the unit will go into running mode once FAULT LEVEL has been exceeded for 5 mins, but the Low dose alarm activate if ALARM LEVEL is not reached. (This value is usually set to Disabled)			
Selectable Values	*	Disabled	
		Enabled	

DOSE	>	INTENSITY UNITS	
Description: Working INTENSITY units can be selected.			
Selectable Values	*	mW/cm^2	
		W/m^2	

DOSE	>	UV SENSOR MAX	
Description: Used to convert UV sensor input to the actual UV intensity. The UV reading at 20 mA should be entered.			
Selectable Values	0 – 1,000		mW/cm^2
	0 – 10,000		W/m^2

DOSE	>	UV SENSOR MAX	
Description: Used to convert UV sensor input to the actual UV intensity. The UV reading at 20 mA should be entered.			
Selectable Values	0 – 1,000		mW/cm^2
	0 – 10,000		W/m^2

COMMS	>	UV DOSE MAX
Description: The value selected equates to 20mA output. Used if the Analogue Output is set to **DOSE**.		
Selectable Values	0 - 5000	

Temperature

TEMPERATURE	>	TEMP UNITS	
Description: Displayed temperature units can be selected.			
Selectable Values	Degrees Celsius		°C
	Degrees Fahrenheit		°F

TEMPERATURE	>	*CHAMBER TEMP ALARM	
Description: Temperature at which a non-critical alarm is generate if the UV Reactor Temperature exceeds this value			
Selectable Values	0 -120		°C
	32 – 248		°F

*Parameter only available if Monitoring is enabled

TEMPERATURE	>	*CHAMBER TEMP FAULT	
Description: Temperature at which a critical alarm is generated if the UV Reactor Temperature exceeds this value This value is usually set to 46°C - If this value is set too high it could lead to damaged equipment or injury!			
Selectable Values	0 -120		°C
	32 - 248		°F

*Parameter only available if Monitoring is enabled

TEMPERATURE	>	*TEMP ALARM D-B	
Description: Temperature reduction required below alarm temperature level before temperature output re-opens			
Selectable Values	0 -120		°C
	32 – 248		°F

*Parameter only available if Monitoring is enabled

TEMPERATURE	>	PANEL TEMP FAULT	
Description: Temperature at which a critical alarm is generated if the Control Panel Temperature exceeds this value This value is usually set to 70°C - If this value is set too high it could lead to damaged equipment or injury!			
Selectable Values	0 -120		°C
	32 – 248		°F

Comms & I/O

COMMS.	>	ANALOGUE OUTPUT 1 SOURCE	
Description: Used to select the required 4-20mA analogue output from AO1.			
Selectable Values		NONE	
		INTENSITY	0 - 100% of Average Intensity from UV Sensor
		DOSE	0 - 100% of ANALOGUE OUTPUT 1 MAX

Note: If Monitoring is not enabled, output will be fixed at 0% (4mA).

COMMS	>	DIGITAL INPUT 1 & 2 SOURCE	
Description: Used to select the digital input function on DI1 or DI2			
Selectable Values		NONE	
	*	REMOTE START/STOP	Used to start & Stop the system remotely
		RESET ALARM	Used to Reset any faults that have been rectified
		PROCESS INTERLOCK	If activated the system will respond to the Process Interlock input, stopping the system from running. If selected, please refer to PROCESS INTERLOCK MODE & PROCESS INTEROCK ACTION for further set-up of this output.

*DI1 is set to this input as Default

COMMS	>	DIGITAL OUTPUT 1 & 2	
Description: Used to select the digital output function on DO1 or DO2			
Selectable Values		NONE	
		TEMP ALARM*	Energises when the Temperature Alarm Level is reached
		REMOTE	Energises when the system is set to run in Remote mode
		DOSE HLTH*	Energises when the measured dose is above the Alarm Level
		SYS RUN	Energises when the system is running
		SYSTEM READY	Energises when the following conditions exist: NO critical faults are present, and the re-strike timer is NOT running
		SYSTEM READY REMOTE	Energises when the following conditions exist: NO critical faults are present; the re-strike timer is NOT running and Remote IS selected.
		LAMP / BALLAST FAILURE	Energises when a Lamp Fault has been generated
		LOW DOSE ALARM*	Energises when the measured dose is above the Alarm Level
		NON-CRITICAL ALARM HEALTHY	Energises when no Non-Critical Alarms are present
		CRITICAL FAULT HEALTHY	Energises when no Critical Alarms are present
		OPEN VALVE	Energises when the system enters Running Mode (Refer to Start-up Sequence)

***** If Monitoring is not used, these outputs will remain de-energised

COMMS	>	MODBUS SLAVE ADDRESS	
Description: Address used for external communications via Modbus (This value is usually set to “1”)			
Selectable Values	1-99		

COMMS	>	DHCP ENABLED	
Description: This is used to setup the internet connectivity: If enabled Dynamic Host Client Protocol is active and the network controller will assign the system an IP address. (This value is usually set to “Enabled”)			
Selectable Values	*	Enabled	
		Disabled	

COMMS	>	IP SETTINGS	
Description: This is used to display the internet connectivity settings.			
Selectable Values	IP Address		xxx:xxx:xxx:xxx
	Subnet Mask		xxx:xxx:xxx:xxx
	Default Gateway		xxx:xxx:xxx:xxx

COMMS	>	DNS	
Description: This is used to setup the internet connectivity: If set to 0 then the Gateway DNS Server will be used, this is the normal setting.			
Selectable Values	xxx:xxx:xxx:xxx		

Process Interlock

COMMS	>	PROCESS INTERLOCK MODE	
Description: Set whether process interlock function is activated. If activated the system will respond to the process interlock input.			
Selectable Values	*	DISABLED	
		RUNNING	Process interlock feedback will only be required when the system has entered running mode
		FULL	System must see interlock feedback before starting

COMMS	>	PROCESS INTERLOCK ACTION	
Description: Defines the action to be taken if the process interlock signal is removed.			
Selectable Values		INTERRUPT	This will temporarily stop the system until the signal is regained (Note: The re-strike timer must also have expired in order for the system to restart)
		SHUT DOWN	This will stop the system until the signal is regained and is manually restarted using the SPECTRA control interface.

COMMS	>	PROCESS INTERLOCK DELAY
Description: Set the time the PROCESS INTERLOCK input (DI8) must be broken before the interlock action is generated		
Selectable Values	0 – 180	Seconds

UVT

UVT	>	UVT SOURCE	
Description: Used to select which UVT valve is used from which source.			
Selectable Values		Disabled	
		Comms	UVT valve via Comms
		Analogue	4-20mA meter input via AI1
		Static	Fixed valve

UVT	>	FIXED UVT	
Description: Used to select the fixed UVT valve.			
Selectable Values	0-100	%	

UVT	>	UVT METER MAX	
Description: Used to convert the UVT meter input (in mA) to the actual UVT. The UVT meter reading at 20mA should be entered.			
Selectable Values	0-100	%	

Miscellaneous

MISC.	>	AUTO RESTART	
Description: Defines whether the system will attempt to restart after a power failure when the lamp/s were running. If a power failure does occur while the system was running, it will generate a POWER LOSS WHEN RUNNING alarm. (This value is usually set to DISABLED)			
Selectable Values	*	DISABLED	
		ENABLED	

MISC.	>	CHANGE PASSWORD?
Description: Change the operator user password. (This value is usually set to “atg”)		
A-Z	Use the up and down arrows to select the required letter, press enter to accept and move on to the next letter.	

MISC.	>	SET TIME
Description: Used to set the real time clock. If the Online Data logging feature is being used, the time will automatically sync to the server clock. Note: This can only be set when the restrike timer is not running		
TIME=24:00:00	Use the up and down arrows to select the required number, press enter to accept and move on to the next character. The clock is a 24-hour clock and can be altered depending on time zone.	

MISC.	>	SET DATE
Description: Used to set the Time and Date and can be altered depending on the time zone. If the Online Data logging feature is being used, the time will automatically sync to the server date. Note: This can only be set when the restrike timer is not running		
DATE=30/12/2015	Use the up and down arrows to select the required number, press enter to accept and move on to the next character. The date is of the format: DD/MM/YYYY	

MISC.	>	LOAD DEFAULTS?
Description: Resets the system to the factory defaults.		
Selectable Values	*	NO
		YES

Integration

This section details how the Spectra control system can be integrated with other equipment on site to provide flexible and reliable operation. For all connections coming in or out of the panel from any equipment, feed-through terminals are provided and located next to the I/O cable entry.

Analogue Inputs

Spectra has one Selectable Analogue Input which operates on a 4-20mA input signal (AI1).

Analogue Input	Description	Connection Details
UVT	This option is available if there is a Transmittance meter being used. The UV Transmissivity determines how well the UVC light will penetrate the water being treated. The higher the UVT, the more effective the UVC is for the deactivation of pathogens. By connecting a 4-20mA UVT input, the Spectra is able to display the UVT of the water being treated that is being passed through the chamber. **Note:** This reading is for information only and has no impact on the operation of the system	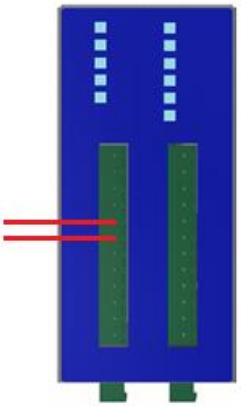
Flow Meter	Flow plays a vital role in determining the UV Dose. If the water being treated passing through the chamber varies in flow, the calculated UV Dose will also be affected. By connecting a 4-20mA flow meter, the Spectra is able to determine a more accurate UV dose reading. The **FLOW SOURCE** set to 'Analogue' and the **FLOW METER MAX** inputted on the Spectra.	

Analogue Outputs

Spectra has 1 Selectable Analogue Output which operates on a 4-20mA input signal (AI1).

Analogue Output	Description	Connection Details
Dose	Spectra has one selectable active analogue outputs (**DOSE & INTENSITY**) which operate on a 4-20mA output signal. One of these signals can be outputted from both AO1 on the on the ATUV-1220 and requires scaling by setting a maximum value at 20mA which is done using the **ANALOGUE OUTOUT 1 MAX** variable. If these outputs are selected, they will replicate the Spectra figures in a 4-20mA signal.	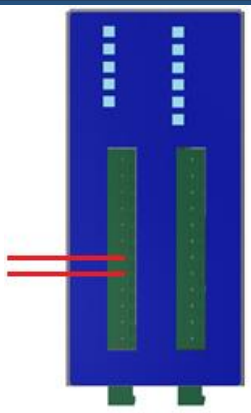
Intensity		

Note: If Monitoring is not used, output will be fixed at 0% (4mA).

Digital Inputs

Spectra has 2 Selectable Digital Inputs DI1 & DI2.

Digital Input	Description	Connection Details
Remote Start/Stop	DI1 on the ATUV-1220 enables the remote Start / Stop action which allows remote volt-free contacts to mimic the action of the normal front panel **START** and **STOP** pushbuttons. If the system is set to remote and the volt free contact is closed the UV system will be permitted to run and continue to run if the signal is still present. If the external signal is removed the UV lamp will be stopped (if running). The system cannot be started using the Touch whilst in remote but can be stopped. By stopping the system locally whilst in remote will cause a critical fault (Local Stop Fault) which will need to be locally reset.	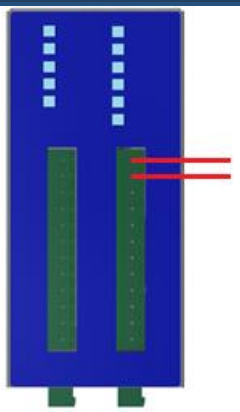
Process Interlock	The Process Interlock opto-isolated input enables an external device (switch, pump, etc.), to stop the running of the UV lamp/s. If the volt free contact is closed the UV system will be permitted to run. **Process Interlock Action** The Process Interlock Action describes HOW the system wants to respond when the signal has been lost: • If **PROCESS INTERLOCK - INTERUPT** has been set and the external signal is lost, the UV lamp will be stopped (if running) causing a Non-Critical Alarm to appear on the spectra (Process Interlock Interrupt) and not allowed to start again until the PI signal is regained and the restrike time has elapsed Note: if Remote is enabled, the remote signal will also have to be present for the system to re-start • If **PROCESS INTERLOCK - SHUTDOWN** has been set and the external signal is lost, the UV lamp will be stopped (if running) causing a Critical Fault (Process Interlock Shutdown) to appear on the Spectra and not allowed to start again until the Critical Fault has been reset locally. **Process Interlock Mode** The Process Interlock Mode describes WHEN the system responds to the signal loss: • If the Process Interlock Mode is set to **NONE**, this function is disabled • If the Process Interlock is set to **FULL**, the system will stop the UV lamp/s from running if the system is in start-up or running mode • If the Process Interlock is set to **RUNNING**, the system will only stop the UV lamp/s from running if the system is in running and ignores if the signal has been lost if the system is in start-up.	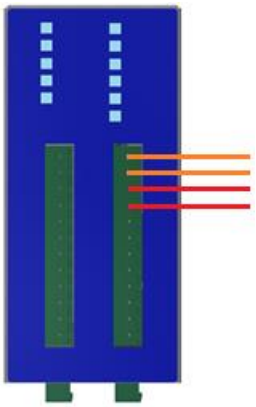 *DI1 set to Remote Start/Stop as default on I/O

Digital Outputs

Spectra has 2 Selectable Digital Outputs:

Digital Output	Description	Connection Details
Open Valve	Spectra can signal the opening & closing of valves if being used in conjunction with the UV system. When the system enters **RUNNING** mode, this output will energise causing the valve to open (operated by motor, air actuated, etc.), in turn causing the valve to close when the signal has been lost.	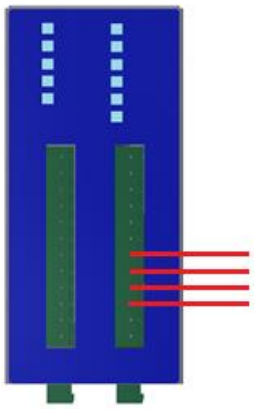
Temperature Alarm*	A bleed on relay can be used in conjunction with one of the Spectra Selectable Digital Outputs. If the **SELECTABLE DIGITAL OUTPUT** is set to **TEMPERATURE ALARM**, and the chamber temperature exceeds its Alarm Set-point value, it will cause the Digital Output to energise. If connected, this will be able to signal a bleed valve to open, either allowing air trapped in the chamber to escape or to allow flow to pass through the chamber, consequently reducing the temperature without reaching the shutdown temperature (**FAULT TEMP**). This Digital Output will de-energise when the chamber temperature falls below the Dead-band Value (normally 5˚C/F), thus closing the bleed valve.	
Critical / Non-Critical Healthy	Both of these Digital Output signals indicate if a Critical Fault or Non-Critical Alarm has been experienced. The Digital Output energises when the Fault / Alarm has occurred.	
Running	This Digital Output signal provides an indication that the system is running. This output energises as soon as the lamp/s strike or are running.	
Dose Healthy*	This Digital Output signal provides an indication that the Dose is Healthy and will energise when the Dose is above the **DOSE ALARM LEVEL** for **GOOD DOSE TIME**.	

***** If Monitoring is not used, these outputs will remain de-energised

MODBUS Communication

Introduction

The Spectra UV disinfection system has built in Modbus RTU for control and monitoring of the systems performance parameters.

This document is aimed at end users and system integrators of the Spectra UV disinfection system and covers the following:

- Modbus implementation
- Modbus maintenance
- Modbus debugging

Supported Interface

Spectra works as a slave device and is implemented in accordance with the EIA/TIA-485 (RS-485) standard, supporting the following:

- 2 or 4 wire interface
- Odd, even and no parity
- Baud rates 9600 to 115200
- One or two stop bits

Physical Connection

Cable Connection

Connection to the Spectra is via the Modbus Slave port on the ATUV-1010 motherboard.



An RJ45 connection is required with the following pin out:

Modbus Slave Pin out		
1	Rx+	Receive positive
2	Rx-	Receive negative
3		
4	Tx-	Transmit negative
5	Tx+	Transmit positive
6		
7		
8	Ground	Reference ground

2 / 4 wire selection

Both 2 and 4 wire interfaces are supported, this is selected using a 4-way header on the ATUV-1010. No jumpers indicate 4 wire interface, for 2 wire interface 2 jumpers should be fitted.

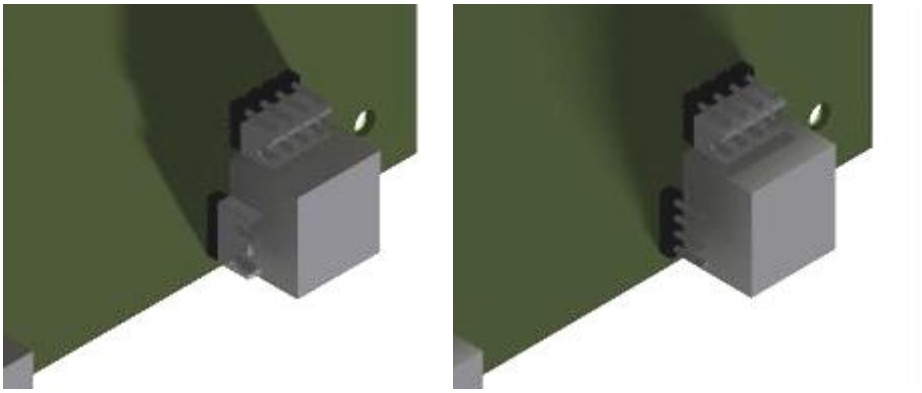

ATUV-1010 with (left) and without jumpers (right)

Data Transmission

The following parameters are set from the config.xml on the SD card and are found in the ModbusSlave directory.

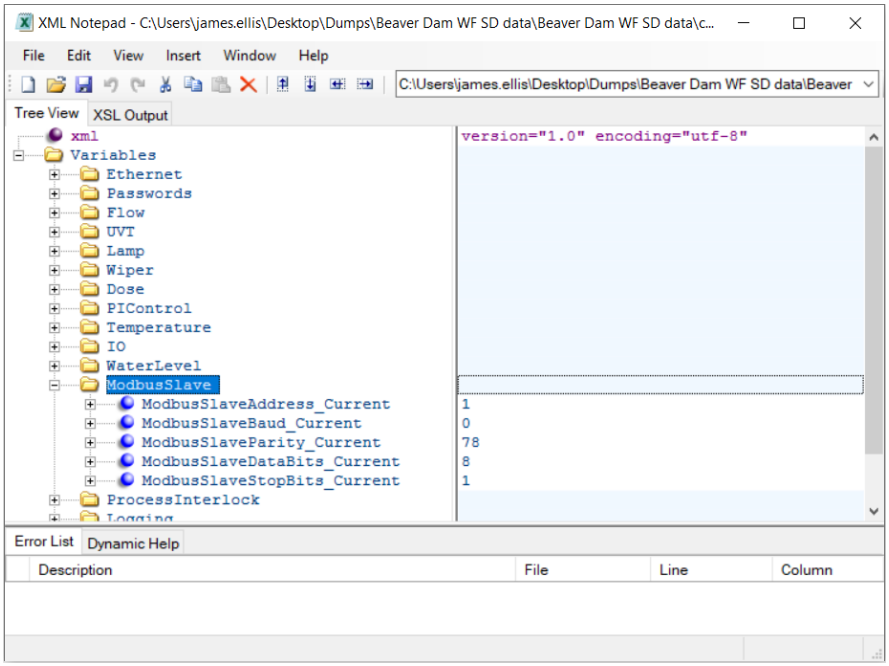

Slave Address

ModbusSlaveAddress_Current	
Description: Used to set this slave address of the Spectra unit.	
Selectable Values	1 - 99

Data Bits

ModbusSlaveDataBits_Current	
Description: Used to select the number of data bits in the Modbus frame.	
Selectable Values	7
	8

Stop Bits

ModbusSlaveStopBits_Current		
Description: Used to select the number of stop bits in the Modbus frame.		
Selectable Values	1	
	2	

Parity

ModbusSlaveParity_Current		
Description: Used to select the parity checking of the Modbus frame.		
Selectable Values	N (78)	None
	E (69)	Even
	O (79)	Odd

Baud Rate

ModbusSlaveBaud_Current		
Description: Used to select the transmission baud rate.		
Selectable Values	0	115200
	1	57600
	2	38400
	3	19200
	4	9600

Message Structure

General Structure

Modbus frames are structured in the following format:

Address	Function Code	Data	CRC
8 bits	8 bits	N x 8 Bits	16 bits

Address
Description: Single byte used to identify the slave address

Function Code	
Description: Consists of a single byte and is used to tell the address slave what action to perform, the following function codes are supported:	
0x03	Read Holding Registers
0x04	Read Input Register
0x06	Write Single Register
0x10	Write Multiple Registers

Data
Description: Multiple bytes containing the actual data

CRC
Description: Consists of 2 bytes which are a result of a cyclic redundancy check calculation performed on the message content.

Read Data

Function code 0x03 and 0x04 requests from the mater should be structured in the following format:

Address	Function Code	Data		CRC
		Register Start Address	Number of Registers	
8 bits	0x03 or 0x04	16 Bits	16 Bits	16 bits

The Spectra will reply to a successful read request in the following format:

Address	Function Code	Byte Count	Data	CRC
8 bits	0x03 or 0x04	8 bits	N x 8 bits	16 bits

Write Data

Write Single Register

Function code 0x06 frames from the master should be structured in the following format:

Address	Function Code	Data		CRC
		Register Address	Data	
8 bits	0x06	16 bits	16 bits	16 bits

The Spectra will reply to a successful write by sending an echo of the request.

Write Multiple Registers

Function code 0x10 frames from the master should be structured in the following format:

Address	Function Code	Data				CRC
		Register Start Address	Number of registers	Byte Count	Data	
8 bits	0x10	16 bits	16 bits	8 bits	N x 8 bits	16 bits

The Spectra will reply to a successful write by sending an echo of the request.

Data Storage

The data stored in the Spectra is arranged as a database, which is accessed for read or write using 16-bit words arranged to give access to control, status and configuration data.

Each parameter has an associated Read / Write attribute associated with it. A byte written to a read only address will be ignored with no exception generated. Similarly, a byte read from a write only address will return 0 with no exception generated.

Writing to an undefined address within the allowable data range is ignored; similarly reading an undefined address will return 0. Again, no exception will be generated.

Attempting to write or read data from an area outside the allowable data range will result in the transmission of an exception message.

Changes to data written from the master are actions immediately upon receipt.

Full Register Map

Address	Description	Units (Default)	Type	Read / Write
46000	Flow Rate	m3/hr (x10)	uint_16	Read
46001	Chamber Temperature	°C (x10)	uint_16	Read
46002	UV Dose	mJ/cm2 (x10)	uint_16	Read
46003	Average UV Intensity	mW/cm2 (x10)	uint_16	Read
46004	Average Lamp Power	Watts	uint_16	Read
46005	System UVT	% (x10)	uint_16	Read
46006	System Power Level	% (x10)	uint_16	Read
46007	Rolling Watchdog	(x1)	uint_16	Read
46008	System Status	(See example)	uint_16	Read
46009	Fatal Alarms	(See example)	uint_16	Read
46010	Critical Alarms	(See example)	uint_16	Read
46011	Non-Critical Alarms	(See example)	uint_16	Read
46012	System Hours	Hours (÷ 24)	uint_16	Read
46013	Dose Set-point	mJ/cm2 (x 10)	uint_16	Read
46020	System Control	(See example)	uint_16	Read / Write
46021	Comms Flow Rate	m3/hr	uint_16	Read / Write
46022	Comms UVT	% (x10)	uint_16	Read / Write
46023	Power Control mode	(See example)	uint_16	Read / Write
46024	Reset Alarms	0 – No reset 1 – Reset Alarms	uint_16	Read / Write
46025	Force Wiper Run	0 – No Run 1 – Force Run	uint_16	Read / Write

Address	Description	Units (Default)	Type	Read / Write
46030	Lamps in use (1-4)	Bit map (See Example)	uint_16	Read
46034	Sensor in use (1-10)	Bit map	uint_16	Read
46035	System Control Mode	0 – Local 1 – Remote 2 - Comms	uint_16	Read
46036	Flow Source	0 – Fixed 1 – Comms 2 – Analogue	uint_16	Read
46037	Dose Units	0 – mJ/cm2 1 – J/m2 2 – J/cm2	uint_16	Read
46038	Flow Units	0 – m3/hr 1 – BPM 2 – l/s 3 – Ml/d 4 – GPM 5 - MGD	uint_16	Read
46039	Intensity Units	0 – mW/cm2 1 – W/m2		
46040	Temperature Units	0 - °C 1 - °F	uint_16	Read
46041	Lamp Life	Hours	uint_16	Read
46042	Restrike time	Minutes	uint_16	Read
46043	Low Dose Time	Seconds	uint_16	Read
46044	Fixed Flow Rate	m3/hr	uint_16	Read
46045	Flow meter Max	m3/hr	uint_16	Read
46048	Dose Alarm Level	mJ/cm2	uint_16	Read
46049	Dose Fault Level	mJ/cm2	uint_16	Read
46050	Fault Temperature	°C	uint_16	Read
46051	Alarm Temperature	°C	uint_16	Read
46052	Power Level	%	uint_16	Read
46053	Auto Restart		uint_16	Read
46055	Water Level Low Delay	Seconds	uint_16	Read
46056	Restrike Countdown Timer	Seconds (counts down upon lamp(s) extinguishing)	uint_16	Read

Address	Description	Units (Default)	Type	Read / Write
47100	UV Intensity 1	mW/cm2 (x100)	uint_16	
47200 – 47231	Lamp 1 Hours to Lamp 2 Hours	Hours	uint_16	Read
47300-47331	Lamp 1 Strikes – Lamp 2 Strikes		uint_16	Read
50454 & 50455	Log Inactivation		Float	Read

Resister Examples

System Control	
Description: Start, Stops & Resets faults present on the system. Note: Spectra requires to be set to Remote to start/stop the system via Comms.	
Address	46020
Type	uint_16
Read / Write	Read / Write
Example	0 - Stop 1 - Start

Power Control Mode	
Description: Selects the power level of the system.	
Address	46023
Type	uint_16
Read / Write	Read / Write
Example	0 – Full 1 - Variable 2 – Low

Note: System operates in Full Power mode Only

Lamps in use	
Description: Indicates the number and order of lamps enabled.	
Address	46030
Units	Y / N
Type	uint_16
Read / Write	Read only
Example	Value of 5 would indicate that lamps 1 and 3 are enabled. (YNYN NNNN NNNN NNNN / 1010 0000 0000 0000)

UV Sensors in use	
Description: Indicates the number and order of UV sensors enabled.	
Address	46034
Units	Y / N
Type	uint_16
Read / Write	Read only
Example	Value of 3 would indicate that sensors 1 and 2 are enabled. (YYNN NNNN NNNN NNNN / 1100 0000 0000 0000)

Fatal Alarms	
Description: Displays the status of the fatal alarms	
Address	46009
Type	uint_16
Read / Write	Read only
Example	0 – No fatal alarms 1 – I/O Module Communications Watchdog 2 – Electronic Ballast Communications Watchdog 4 – Local Stop Fault

Critical Alarms	
Description: Displays the status of the critical alarms	
Address	46010
Type	uint_16
Read / Write	Read only
Example	0 – No critical alarms 1 - I/O modules less than expected 2 - Electronic Ballasts Less than expected 4 – I/O Module not calibrated 8 - SD Card not found 16 - Ballast/Lamp fault 32 - Chamber temperature fault 64 – Control Panel over temperature 128 – Low UV dose fault 256 – Water Level Low 512 – Process Interlock shutdown 1024 – Flow Meter Out of Range

Non-Critical Alarms	
Description: Displays the status of the non-critical alarms	
Address	46011
Type	uint_16
Read / Write	Read only
Example	0 – No non-critical alarms 1 – Process interlock interrupt 2 – Low UV dose alarm 4 – Wiper Alarm 8 – Lamp Approaching end of life 16 – Chamber temperature alarm 32 – Power Loss When Running

System Status	
Description: Displays the overall status of the system.	
Address	46008
Type	uint_16
Read / Write	Read only
Example	0 – Normal Stop 1 – Running 2 – Starting Up 4 – Fatal Fault 8 – Critical Fault 16 – Non-Critical Alarm 32 – Stopped Restrike, Stopped Non-Critical, Stopped Critical, Stopped Fatal, Stopped Process Interlock

Trouble Shooting

Should a fault occur, please see below for troubleshooting guide.

NOTE: Should more than one fault occur, the fault screen with the highest priority will be displayed. Pressing DOWN on the keypad accesses the lower priority screens. Once the cause of the alarm or fault has been rectified, pressing the reset button on the front membrane will reset the alarm.

System does not operate

Message	
No Message	
Possible Cause	**Possible Solutions**
Main Power Source is OFF	Ensure there is power to the system
Isolator is in the OFF Position	Ensure both the Isolator and all MCB's are turned ON.
Incorrect Supply Voltage	Ensure the correct voltage is being supplied to the system
Faulty 24VDC Power supply	Ensure the 24VDC power supply LED is energized (healthy), and 24VDC +/- 1V is being measured from the output

No CRC Was Found

Message	
No Kernel CRC Found	
Reasons	**Possible Solutions**
SD card not inserted upon power on	Ensure the SD card is inserted correctly
The Spectra2.afx.S19 file is missing from the SD card	Ensure the Spectra2.afx. file is located in the root of the SD card

Ballast/Lamp Fault

Message		
Ballast / Lamp Fault		
Reasons	**Possible Causes**	**Possible Solutions**
Lamp did not strike upon start-up **Or** **Lamp extinguished while running**	Faulty UV lamp	Check for visible damage to UV lamp (e.g. cracks in lamp)
	Faulty Connection	Check for visible damage to lamp cables and connections
	Lamp On (internal) Relay is not energising	Ensure DO3 energises on the ATUV-1220 when starting the system
	Inconsistent power supplied to the system	Check the power to the system is not experiencing any voltage dips. A decrease in voltage would cause a decrease in current through the lamp.
	Other large equipment is starting	If other large equipment is starting (e.g. pump) when the UV system is starting, the voltage across the UV lamp may dip long enough (milli-seconds) for the arc to decay.

Low Dose

Message		
Low Dose Alarm or Low Dose Fault		
Reason	Possible Causes	Possible Solutions
Dose Drops below Alarm Level/Fault Set-points	Fouling/deposits blocking UV light to the Sensor	Check the Quartz window for deposits on the inside or outside. Any coating can reduce the amount of UV light passing through to the UV Sensor. The amount of UV Light that will pass through the Quartz decreases as it ages and should be changed approximately every 18 months.
		Check for fingerprints on both the Quartz & UV Lamp. If the Quartz & UV Lamp are handled without gloves, the grease/fatty deposits from the skin can etch themselves onto the surfaces once the lamp is struck.
	UV Transmittance (UVT) of the water has decreased	Ensure water quality is within specification for the UV system installed
	Aging of the Lamp	Check the UV Lamp run time and replace lamp if necessary. UV Intensity decreases as the lamp ages.
	An increase in flow (if flow meter is fitted)	Check the Flow Rate flowing through the system. If a flow meter is enabled, an increase in flow will decrease the Dose. Also check the FLOW METER MAX variable is not set higher than the maximum flow the chamber will experience.
	Dose Alarm/Fault levels are set too high	Check that DOSE ALARM LEVEL and DOSE FAULT LEVEL are set to the correct values.
	UV Probe is not properly connected	Check there is a sensible value displayed on the screen. With the system stopped 4mA should be displayed. The UV1/2 LED on the ATUV-1220 should also be illuminated (indicating a healthy signal)
	As the wiper (if fitted) sweeps across the quartz, the UV intensity may dip long enough for it too cause an alarm.	Check the LOW DOSE TIME value is correct. Force the wiper to carry out a sweep of the quartz to see if it affects the Dose long enough to generate a fault/alarm.
	Air trapped between the sensor and lamp/s	Ensure any air trapped in the chamber is remove as air trapped within the system will not allow UV Light to pass through correctly.
	Possibility of a Faulty probe	Check for visible damage to the probe & probe cable

Control Panel Over-Temperature

Message		
Control Panel Over Temperature		
Reason	Possible Cause	Possible Solutions
The temperature inside panel has exceeded the thermostat cut-out temperature	High ambient temperature	Ensure the ambient temperature is not higher than allowed operating temperature

Chamber Over-Temperature

Message		
Chamber Over-Temperature Alarm or Chamber Over-Temperature Fault		
Reason	**Possible Causes**	**Possible Solutions**
Chamber temperature reading has exceeded temperature Alarm set-point **Or** **Chamber temperature reading has exceeded temperature Fault set-point**	Very slow or static flow through chamber	Check Fluid is flowing through the system at a reasonable flow.
		Check Manual/Auto Valves are Open
	Temperature Fault/Alarm levels set too low for application	Check the initial temperature of fluid flowing through the system
		Check the Fault/Alarm Set-Points are set to the correct/reasonable value
	Faulty Connection	Check for visible damage to the temperature probe & probe cable. Check the resistance across the red/blue and green wires to the temperature sensor (see below for resistance values).
		Check there is a sensible value displayed on the screen and the TEMP LED on the ATUV-1220 is illuminated (indicating a closed signal)

Note: Fault will only occur if chamber temperature monitoring is being used

Power Loss While Running

Message	
Power Loss While Running	
Reason	Possible Solutions
The system was running upon power failure or was turned off.	Check for power failure to the UV System
	Check the power supply for any dips/surges in voltage

Lamp Approaching End of Life

Message	
Lamp Approaching End of Life	
Reason	**Possible Solutions**
The lamp life timer has exceeded the recommended run hours	The system has a timer that counts how long the lamp has been running. Once this time is exceeded the UV Lamp should be changed & the Lamp Run hours reset.

Resetting Lamp hours

To Reset the Lamp hours after a Lamp change:
Enter the Operator Menus (Refer to the Set-up Screen Menus – Operator Menus) and scroll down to the LAMP MENU screen and press enter.

- To **Reset hours on all Lamps**, select **RESET ALL LAMPS** by pressing enter on the menu and confirm with Yes.
- To **Reset Individual Lamp hours** select **RESET INDIVIDUAL LAMP HOURS** and **RESET LAMP # HOURS** will appear. Scroll up/down to select the desired Lamp and press enter to select Yes to reset the hours for that particular lamp.

Local Stop Fault

Message	
Local Stop Fault	
Reason	**Possible Solutions**
System has been stopped from the Spectra while in remote	If the system is running in remote, pressing the Stop button on the Spectra will still stop the system creating a Fatal Fault. This cannot be reset over the Modbus communications network. Pressing the Reset button on the Spectra will restart the system if the remote run signal is still present & the re-strike timer has elapsed.

Process Interlock

Message	
Process Interlock Interrupt or Process Interlock Shutdown	
Reason	Possible Solutions
Process Interlock signal (DI1/DI2 on ATUV-1220) has been lost while running/start-up	Check signal from the Process Interlock device. e.g. Pump is running – Flow Switch has operated etc.
	Check the associated DI on the ATUV-1220 is energising when the signal from the Process Interlock is active
	Check Process Interlock Delay time is set to an appropriate time.
	Check for visible damage to signal cables

I/O Communications Watchdog

Message	
I/O Module Watchdog Error	
Reason	**Possible Solutions**
Communication to the ATUV-1220 has been lost	Check ethernet connections from the spectra to the ATUV-1220 and the AO1 is illuminated
	Ensure there is power to the module.

I/O Modules Less Than Expected

Message	
I/O Modules Less Than Expected	
Reason	**Possible Solutions**
The Number of I/O's enabled on the spectra has exceeded the actual number of lamps modules being used	Check the ATUV-1220 address' correspond to the Number of I/O's enabled on the Spectra (Please refer to the Spectra Operations & Maintenance manual for details)
	Check Ethernet connections between Spectra & ATUV-1220

Flow Meter Out of Range

Message		
Flow Meter Out of Range		
Reason	**Possible Causes**	**Possible Solutions**
The flow meter input (AI1 on the ATUV-1220) is outside the 4mA and 20mA tolerances	Faulty signal	Ensure the signal from the device to the Spectra is within 4 & 20 mA.
	Faulty connection	Check all cable connections and ensure AI1 LED is illuminated indicating a signal above 3.5 mA.

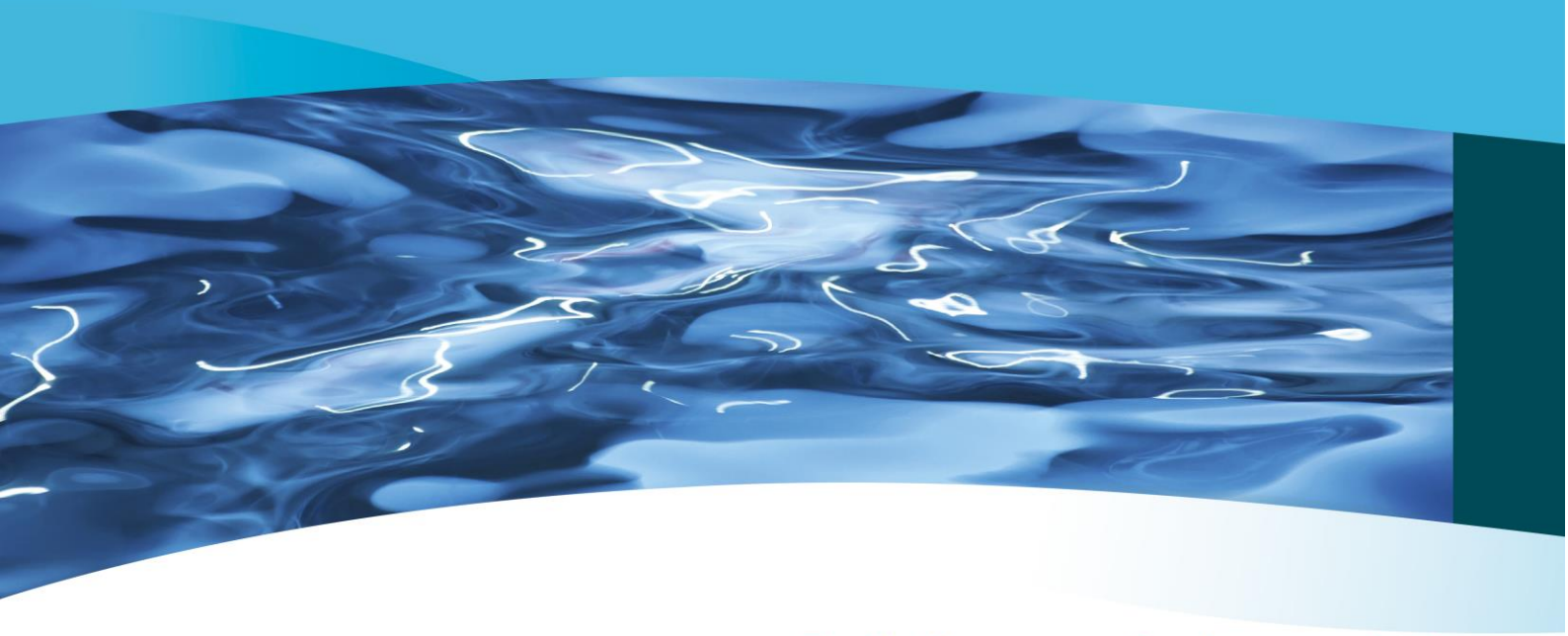

For further support, please contact your local authorised service provider. Alternatively, contact our UK head office:

FOR GENUINE SPARE PARTS:

E: spares.atg@evoqua.com | T: +44 (0)1942 216161 – Opt 1

TO ARRANGE A SERVICE OR COMMISSION:

E: service.atg@evoqua.com | T: +44 (0)1942 216161 – Opt 1

FOR ANY OTHER ENQUIRIES:

E: info.atg@evoqua.com | T: +44 (0)1942 216161

EVOQUA WATER TECHNOLOGIES LTD

Genesis House
Richmond Hill
Wigan
WN5 8AA
United Kingdom

www.evoqua.com | www.atguv.com

EVOQUA
WATER TECHNOLOGIES